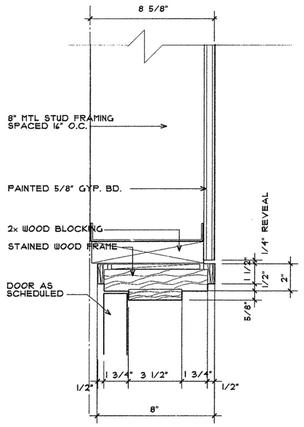

1 WOOD DOOR FRAME - HEAD DTL.
SCALE: 3" = 1' - 0"

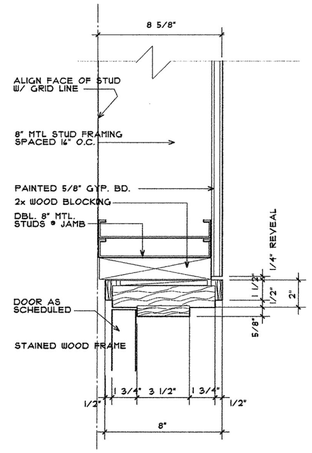

2 WOOD DOOR FRAME - JAMB DTL.
SCALE: 3" = 1' - 0"

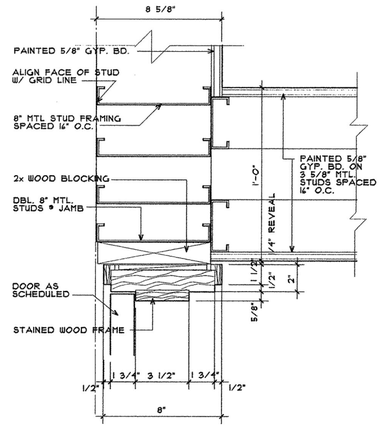

3 WOOD DOOR FRAME - JAMB DTL.
SCALE: 3" = 1' - 0"

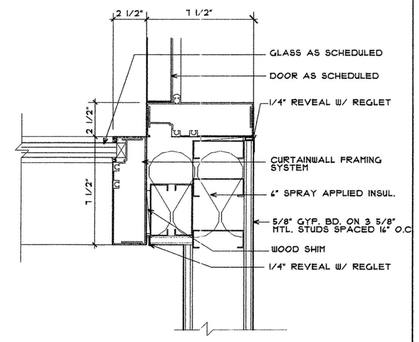

4 ALUM. CURTAINWALL - MULL DTL.
SCALE: 3" = 1' - 0"

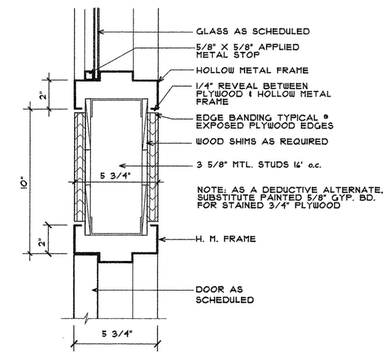

5 H.M. DOOR FRAME - HEAD DTL.
SCALE: 3" = 1' - 0"

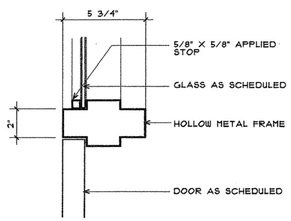

6 HOLLOW METAL FRAME - MULL DTL.
SCALE: 3" = 1' - 0"

POLK
STANLEY
YEARY
ARCHITECTS, LTD.

700 SOUTH SCHILLER
LITTLE ROCK, AR 72201
501 378-0878
FAX 372-7629

21 W. MOUNTAIN, SUITE 227
FAYETTEVILLE, AR 72701
479-444-0473

CONSULTANTS:

OWNER'S PROJECT ADVISOR:
MOSES TUCKER REAL ESTATE, INC.

CIVIL ENGINEER:
McCLELLAND ENGINEERS

LANDSCAPE ARCHITECT:
LARSON BURNS SMITH

STRUCTURAL ENGINEER:
CROMWELL ENGINEERS INC.

MECH., ELEC., PLUMB. ENGINEER:
CROMWELL ENGINEERS INC.

SUSTAINABLE CONSULTANT:
BNIM / ELEMENTS

GLOBAL VILLAGE CONSULTANT
CAMBRIDGE SEVEN ASSOCIATES

INTERIOR DESIGNER:
POLK STANLEY YEARY

GENERAL CONTRACTOR:
CDI

GENERAL NOTES:

NOTES:

ISSUE DATE:

100% ROLL UP
PACKAGE #7
JULY 1, 2004

REVISIONS:

#	DATE	DESCRIPTION
1	01JULY 04	PACKAGE #7

HEIFER
INTERNATIONAL
CENTER
OFFICE BUILDING

LITTLE ROCK, ARKANSAS

PSY PROJECT NUMBER:
431C

CONTENTS:
DOOR DETAILS

SHEET NUMBER:
A509

P:\D-DWG\431C\CA\FinalDrawingsForCDs\Final\A509-DoorDetails 7/1/2004