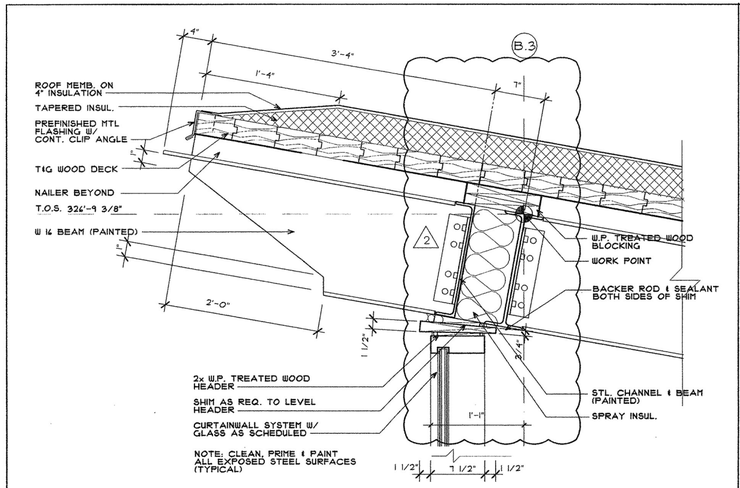


1 RAFTER TAIL DETAIL
SCALE: 1 1/2" = 1'-0"

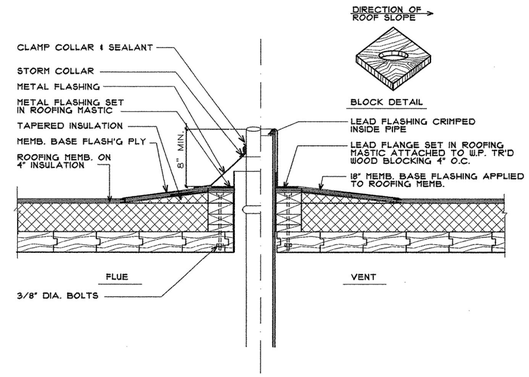


2 VENT/FLUE THRU ROOF DETAIL
SCALE: 1 1/2" = 1'-0"

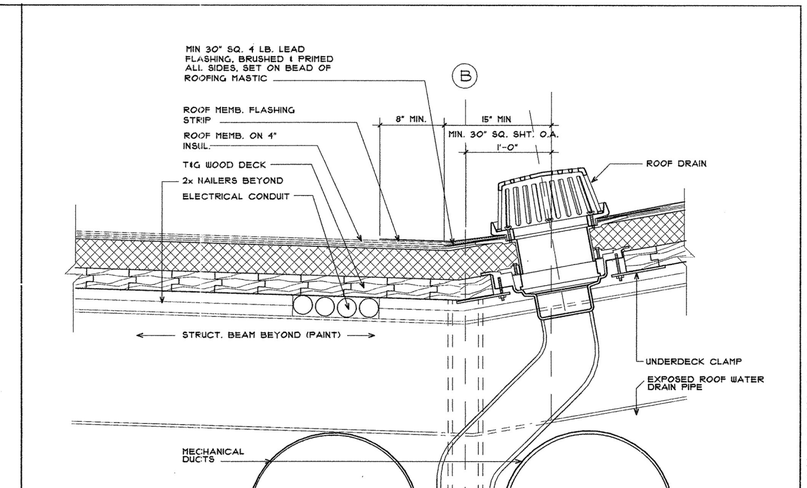


3 ROOF DRAIN DETAIL
SCALE: 1 1/2" = 1'-0"

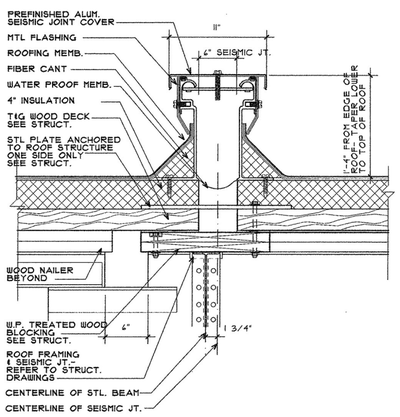


4 ROOF SEISMIC JT. COVER DTL
SCALE: 1 1/2" = 1'-0"

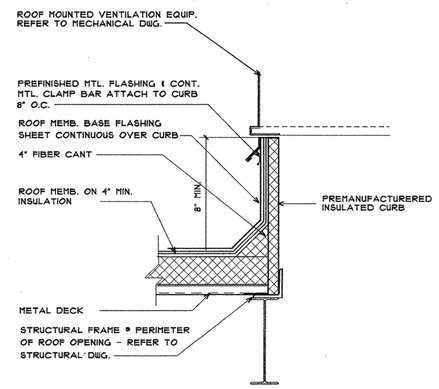


5 MECH. EQUIP. CURB DTL.
SCALE: 1 1/2" = 1'-0"

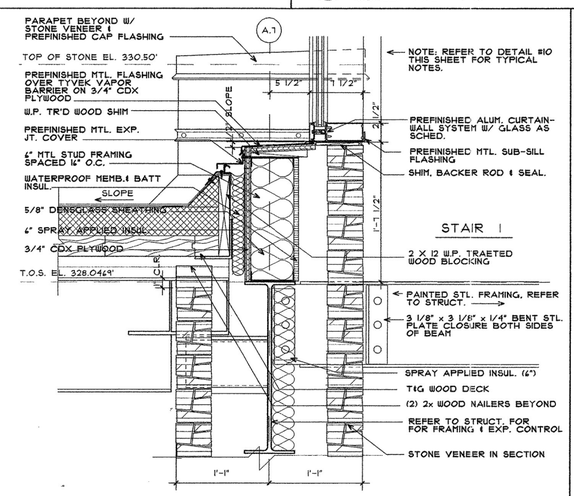


6 ROOF - WALL EXP. JT. DETAIL
SCALE: 1 1/2" = 1'-0"

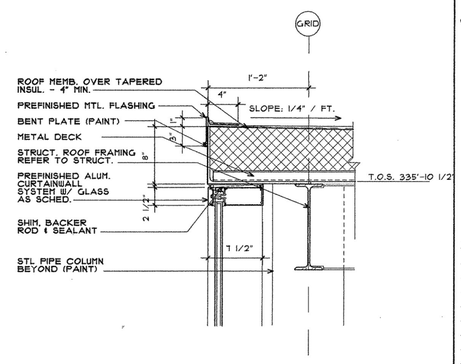


7 ROOF PARAPET DETAIL
SCALE: 1 1/2" = 1'-0"

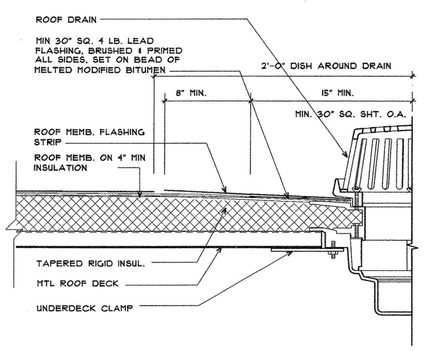


8 ROOF DRAIN DETAIL
SCALE: 1 1/2" = 1'-0"

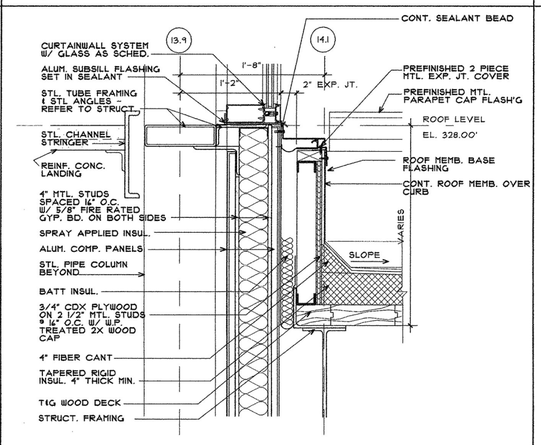


9 ROOF - WALL EXP. JT. DETAIL
SCALE: 1 1/2" = 1'-0"

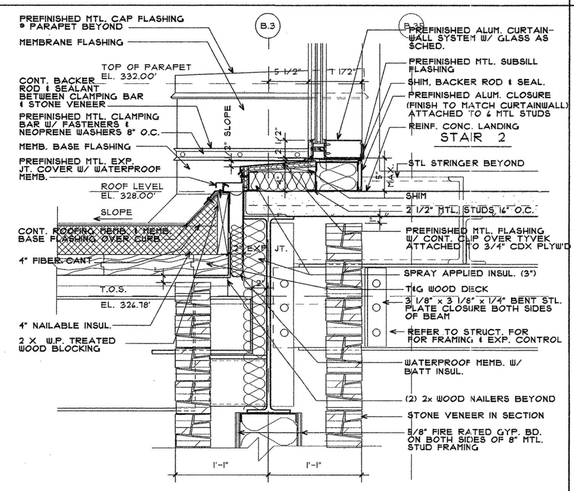


10 ROOF - WALL EXP. JT. DETAIL
SCALE: 1 1/2" = 1'-0"

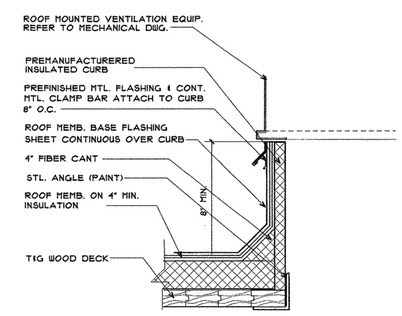


11 MECH. EQUIPMENT CURB DTL.
SCALE: 1 1/2" = 1'-0"


POLK
STANLEY
YEARY
ARCHITECTS, LTD.

700 SOUTH SCHILLER
LITTLE ROCK, AR 72201
501 378-0878
FAX 372-7629

21 W. MOUNTAIN, SUITE 227
FAYETTEVILLE, AR 72701
479-444-0473


CONSULTANTS:

OWNER'S PROJECT ADVISOR:
MOSES TUCKER REAL ESTATE, INC.

CIVIL ENGINEER:
McCLELLAND ENGINEERS

LANDSCAPE ARCHITECT:
LARSON BURNS SMITH

STRUCTURAL ENGINEER:
CROMWELL ENGINEERS INC.

MECH., ELEC., PLUMB. ENGINEER:
CROMWELL ENGINEERS INC.

SUSTAINABLE CONSULTANT:
BNIM / ELEMENTS

GLOBAL VILLAGE CONSULTANT
CAMBRIDGE SEVEN ASSOCIATES

INTERIOR DESIGNER:
POLK STANLEY YEARY

GENERAL CONTRACTOR:
CDI

GENERAL NOTES:

NOTES:

ISSUE DATE:
100% GMP
PACKAGE #6
FEBRUARY 2, 2004

REVISIONS:

| # | DATE | DESCRIPTION |
|---|---|---|
| 1 | 01JULY 04 | PACKAGE #7 |
| 2 | 01NOV04 | ASI NO. 21 |
| | | |
| | | |

# HEIFER INTERNATIONAL CENTER OFFICE BUILDING

LITTLE ROCK, ARKANSAS

PSY PROJECT NUMBER:
431C

CONTENTS:
ROOF DETAILS

SHEET NUMBER:
A421

P:\D-DWG\431C\C6\FinalDrawings\FinCD's\Final\A421-Roof Details 11/1/2004