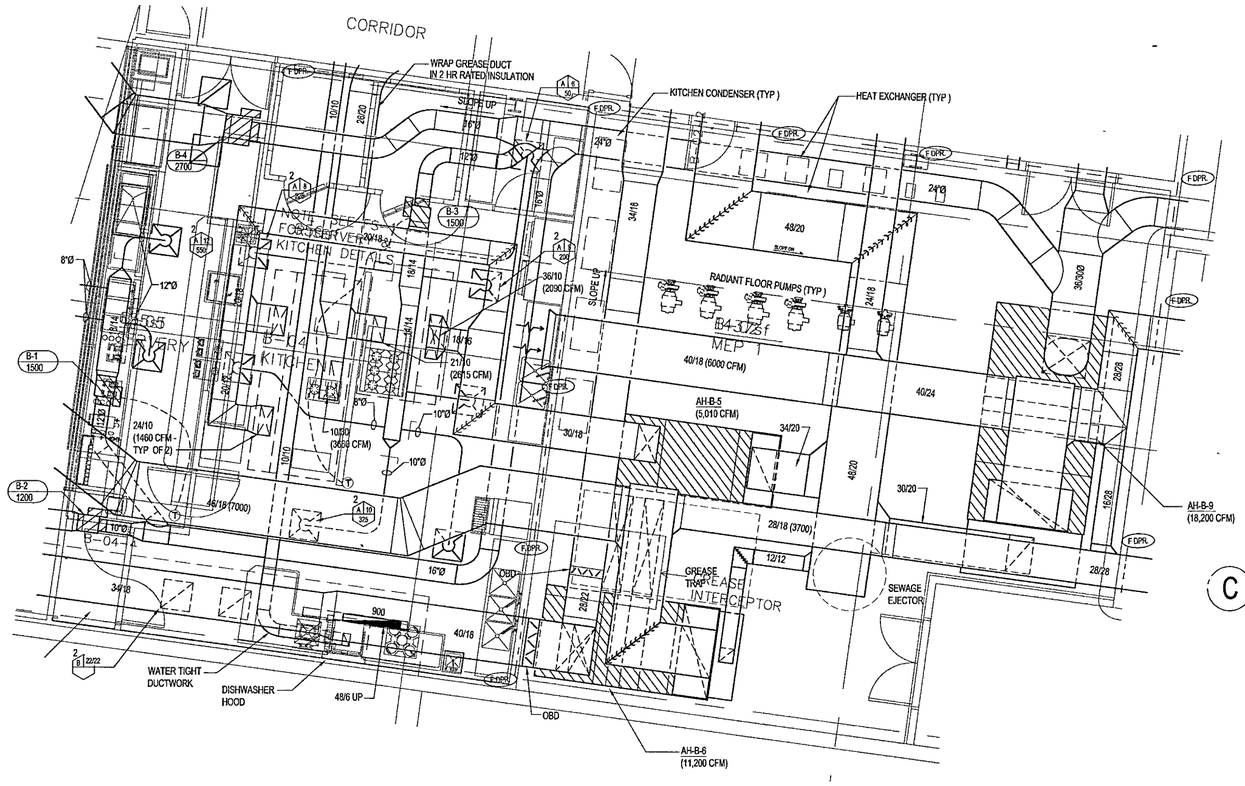

1 ENLARGED MECHANICAL ROOM MEP 1 PLAN

M300b | M504 1/4" = 1'-0"

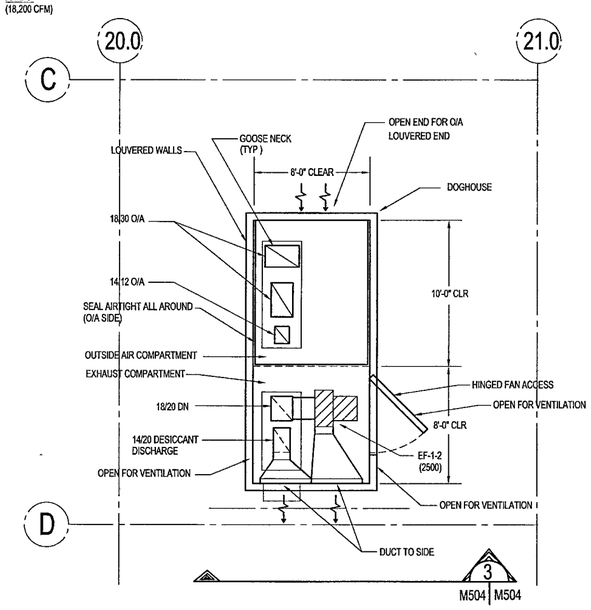

2 DOGHOUSE AT ARCHIVE ROOF

M302C | M504 1/4" = 1'-0"

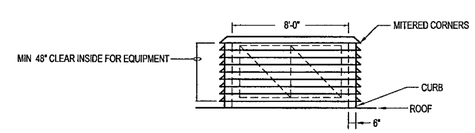

3 SECTION @ DOG HOUSE

M504 | M504 1/4" = 1'-0"

WILLIAM J. CLINTON PRESIDENTIAL CENTER

LITTLE ROCK, ARKANSAS

Architect

POLSHEK PARTNERSHIP LLP
320 West 13th Street
New York, New York 10014
212 807 7171

Coordinating Architects

POLK STANLEY YEARY ARCHITECTS, Ltd
700 South Schiller Street
Little Rock Arkansas 72201
501 378 0878

WITSELL EVANS RASCO
901 West Third Street
Little Rock Arkansas 72201
501.374 5300

WOODS CARADINE ARCHITECTS
2200 South Main Street
Little Rock Arkansas 72206
501 374 4060

Landscape Architects

HARGREAVES ASSOCIATES
118 Magazine Street
Cambridge Massachusetts 02139
617 661 0070

LANDSCAPE ARCHITECTURE, Inc.
2309 Cottondale Lane Suite 202
Little Rock Arkansas 72202
501.374 5610

Structural Engineer

LESLIE E. ROBERTSON ASSOC RLLP
30 Broad Street 47th Floor
New York New York 10004
212 750 9000

MEP Engineers

FLACK + KURTZ Inc
475 Fifth Avenue
New York New York 10017
212 532.9600

CROMWELL ARCHITECTS ENGINEERS
101 South Spring Street
Little Rock Arkansas 72201
501 372.2900

Curtainwall Consultant

R. A. HEINTGES ARCHITECTS
126 Fifth Avenue 9th Floor
New York, New York 10011
212.632 2968

Seal

STATE OF ARKANSAS REGISTERED PROFESSIONAL ENGINEER No 9395

Issue	Date
100% Construction Documents	09/27/02
90% Progress Printing	08/30/02

Job No POLSHEK & PARTNERS ARCH. 9908
CROMWELL AE 99-114

Scale 1/8" = 1'-0"

Date SEPTEMBER 27 2002

Title HVAC ENLARGED PLANS AND SECTIONS

Sheet No M504

CROMWELL ENGINEERS #55 CERTIFICATE OF AUTHORIZATION ARKANSAS ENGINEER

FOR OFFICIAL USE ONLY