GENERAL NOTES FOR NON WATER WASH VENTILATORS

ELECTRICAL

1 Locate Fan Start/Stop Switch in a convenient location. Refer to the wiring diagram for required wiring.
2. If ventilators are equipped with light fixtures, provide a separate light circuit to the ventilator as shown on electrical plan.

EXHAUST VOLUME REQUIREMENTS

3. Exhaust volumes, as shown on these drawings, are determined by established Gaylord engineering criteria and in accordance with the terms of the UL listing.
4. Ventilator static pressure is noted on each ventilator plan view. Total duct system and other external static's must be added to the ventilator static for determining the total system static pressure drop. Static based on operation at room temperature.
5. Duct size based on 1700-1800 fpm.

MAKE-UP AIR REQUIREMENTS

6. Make-up air should be supplied for replacement of air exhausted through all kitchen exhaust systems. Unless built in as part of the ventilator make-up air should be delivered through registers at ceiling height and distributed throughout the kitchen. A general "rule of thumb" is that:
75% to 80% of the replacement air should be fresh, conditioned (heated or cooled) air brought into the kitchen areas -- with the remaining 20% to 25% allowed to flow into the kitchen from adjacent areas.

INSTALLATION

7 Ventilators to be installed in accordance with NFPA-96 and all other local applicable codes. Contractors must review applicable codes with code authorities before approving drawings for fabrication. Special attention must be given to code regulations relative to clearances from surrounding combustible and finished combustible construction (walls, ceiling, etc.).
8. Ventilators manufactured in multiple sections are factory pre-wired to a single connection point. Ventilators are disconnected for shipment to be reconnected by electrical contractor
9 Ventilators manufactured in multiple sections may have drains factory interconnected (see drawing) to a single outlet point. Ventilators are shipped with a "loose" drain connector to be installed by plumbing contractor
10. All ductwork beyond the hood/duct transition must be supplied and installed by others, in accordance with applicable codes. Exhaust ducts must be continuously welded liquid tight.
11 All ventilators are equipped with hanging brackets. Hanging rods to be supplied by ventilator installer Hanging weight of the ventilator(s) is noted on each drawing.
12. Ventilators manufactured in multiple sections are provided with bolts, clips, and all necessary hardware for reconnecting by the ventilator installer Control and light/plug wiring are pre-wired and disconnected for shipment. Wiring must be reconnected by applicable trades.

CONSTRUCTION

13. Ventilators are manufactured in strict accordance with Gaylord specifications.
14. Ventilators constructed of 18 Ga. stainless steel, Type 304, No. 4 finish unless otherwise noted on drawings.

FIRE EXTINGUISHING SYSTEM

15. Fire extinguishing system furnished and installed in accordance with NFPA-96 by:
16. Caution: Fire extinguishing nozzle piping installed on the ventilator at job site must be coordinated with anyone to ensure piping does not interfere with the ventilator's operation/performance. Improper installation may void UL Listing of the ventilator.
17 IMPORTANT NOTE: NFPA-96 requires that all gas and electric cooking equipment, that is protected by surface fire protection, must automatically shut off the fuel and power to the equipment upon actuation.
18. IMPORTANT NOTE: Most models require the extinguisher to separate hood and fire protection permits prior to installation. The hood permit is typically obtained through the plan review department and the fire protection permit from the fire prevention bureau. It is the responsibility of the installing contractor to check with local building departments for their requirements and to obtain necessary permits.

LIGHTING

19. Light fixtures in ventilators will provide less than 30 foot candles of light at the cooking surface as a standard, unless otherwise noted on Section View Confirm if less amount of light is acceptable with local health codes.

THE GAYLORD VENTILATOR TESTING
LISTING AND COMPLIANCE REFERENCES:

IMPORTANT NOTE: Gaylord Ventilators are designed to meet the National codes listed below. Local codes may vary. Gaylord Ventilators must be installed in writing all local codes that may affect the ventilator design.

NATIONAL FIRE PROTECTION ASSOCIATION
The exhaust ventilator meets all requirements of the latest edition of NFPA-96.

NATIONAL SANITATION FOUNDATION
The exhaust ventilator is NSF listed under Standard # 2 - "Food Service Equipment"

UNDERWRITERS LABORATORIES, INC
The exhaust ventilator has been tested under standard UL. 710 "Exhaust Hoods for Commercial Cooking Equipment" It is U.L. listed under file number MH1453 or MH2522.

INTERNATIONAL MECHANICAL CODE
The exhaust ventilator meets all requirements of the International Mechanical Code.

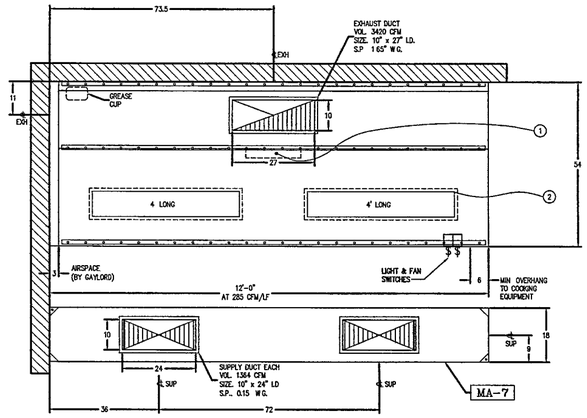

ITEM #7
PLAN VIEW

NOTE. FIRE PROTECTION SYSTEM SUPPLIED AND INSTALLED WITHIN VENTILATOR BY OTHERS.

VENTILATOR NOTES
(NON-WATER WASH)

A) VERIFY ALL MAKES AND MODELS OF COOKING EQUIPMENT AND LOCATION IN RELATION TO VENTILATOR PRIOR TO FABRICATION.
B) FRONT AND REAR MOUNTING BRACKETS HAVE #0.625" HOLES. BRACKETS TO BE SUPPORTED WITHIN 12" OF EACH END OF EACH SECTION, WITH A MAXIMUM SPAN OF 72" BETWEEN SUPPORTS.
C) INTERIOR MOUNTING BRACKET(S) TO BE SUPPORTED WITHIN 36" OF EACH END OF EACH SECTION, WITH A MAXIMUM SPAN OF 72" BETWEEN SUPPORTS.

VENTILATOR WIRING NOTES
(NON-WATER WASH)
(ELECTRIC DAMPER)

① (4) WIRES AND GROUND FOR CONTROL(S), IN FLEXIBLE CONDUIT, EXTENDING 6' BEYOND END OF VENTILATOR BY GAYLORD. WIRED TO FAN ON/OFF SWITCH BY ELECTRICAL CONTRACTOR
* LIGHT FIXTURES, VAPOR PROOF, U.L. LISTED FURNISHED, INSTALLED AND WIRED BY GAYLORD. *
② (2) WIRES AND GROUND FOR LIGHT(S), IN FLEXIBLE CONDUIT, EXTENDING 6 BEYOND END OF VENTILATOR BY GAYLORD. WIRED TO LIGHT SWITCH BY ELECTRICAL CONTRACTOR.

VERIFY CEILING CONDITIONS

EXACT FLOOR TO STRUCTURAL CEILING AND FLOOR TO FINISH CEILING HEIGHTS MUST BE VERIFIED FOR VENTILATOR DESIGN. INCORRECT HEIGHTS MAY CAUSE THE VENTILATOR TO NOT FIT PROPERLY OR COMPLY WITH CLEARANCES SPECIFIED IN APPLICABLE CODES AND STANDARDS. CAUTION: IF THE FINISHED CEILING IS HIGHER THAN THE TOP OF THE VENTILATOR, ENCLOSURE PANELS MAY BE REQUIRED.

FLOOR TO STRUCTURAL CEILING: _____ (VERIFY)
FLOOR TO FINISH CEILING: 9'-0" (VERIFY)

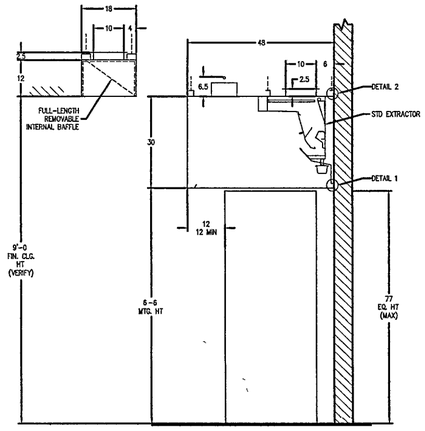

ITEM #7
SECTION VIEW

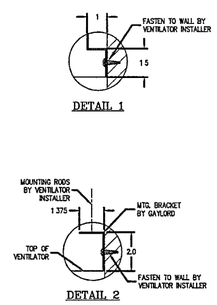

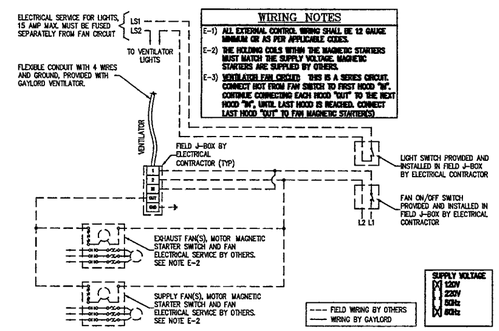

WIRING NOTES

E-1) ALL EXTERNAL CONTROL WIRING SHALL BE 12 GAUGE MINIMUM OR AS PER APPLICABLE CODES.
E-2) THE HOLDING COILS WITHIN THE MAGNETIC STARTERS MUST MATCH THE SUPPLY VOLTAGE. MAGNETIC STARTERS ARE SUPPLIED BY OTHERS.
E-3) VENTILATOR FAN CIRCUIT: THIS IS A SERIES CIRCUIT. CONNECT HOT FROM FAN SWITCH TO FIRST HOOD "IN". CONTINUE CONNECTING EACH HOOD "OUT" TO THE NEXT HOOD "IN", UNTIL LAST HOOD IS REACHED. CONNECT LAST HOOD "OUT" TO FAN MAGNETIC STARTER(S)

INSTALLATION INFORMATION

MAXIMUM VENTILATOR DIMENSION:
X=_____ L + X=_____ ft.
X=_____ ft.
TOTAL ESTIMATED HANGING WEIGHT: 150 _____ LBS.

VENTILATORS MANUFACTURED IN MULTIPLE SECTIONS ARE PROVIDED WITH BOLTS, CLIPS, AND ALL NECESSARY HARDWARE FOR RECONNECTING BY THE VENTILATOR INSTALLER. CONTROL AND LIGHTING WIRING ARE PRE-WIRED AND DISCONNECTED FOR SHIPMENT. WIRING MUST BE RECONNECTED BY APPLICABLE TRADES.

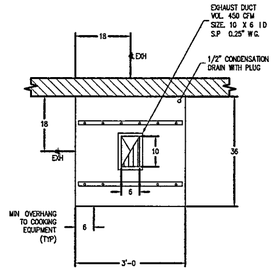

ITEM #21
PLAN VIEW

VH2 VENTILATOR NOTES

A) VERIFY ALL MAKES AND MODELS OF COOKING EQUIPMENT AND LOCATION IN RELATION TO VENTILATOR PRIOR TO FABRICATION
B) FRONT AND REAR MOUNTING BRACKETS HAVE #0.625" HOLES. BRACKETS TO BE SUPPORTED WITHIN 12" OF EACH END OF EACH SECTION, WITH A MAXIMUM SPAN OF 72" BETWEEN SUPPORTS.
C) 1/2" CONDENSATION DRAIN WITH PLUG.

VENTILATOR WIRING NOTES
(NON-WATER WASH)

① (2) WIRES AND GROUND, FOR FAN ON/OFF SWITCH TO J-BOX ON TOP OF VENTILATOR BY ELECTRICAL CONTRACTOR. WIRED TO SUPPLY VOLTAGE AND FANS BY ELECTRICAL CONTRACTOR.

VERIFY CEILING CONDITIONS

EXACT FLOOR TO STRUCTURAL CEILING AND FLOOR TO FINISH CEILING HEIGHTS MUST BE VERIFIED FOR VENTILATOR DESIGN. INCORRECT HEIGHTS MAY CAUSE THE VENTILATOR TO NOT FIT PROPERLY OR COMPLY WITH CLEARANCES SPECIFIED IN APPLICABLE CODES AND STANDARDS. CAUTION: IF THE FINISHED CEILING IS HIGHER THAN THE TOP OF THE VENTILATOR, ENCLOSURE PANELS MAY BE REQUIRED.

FLOOR TO STRUCTURAL CEILING: _____ (VERIFY)
FLOOR TO FINISH CEILING: 9'-0" (VERIFY)

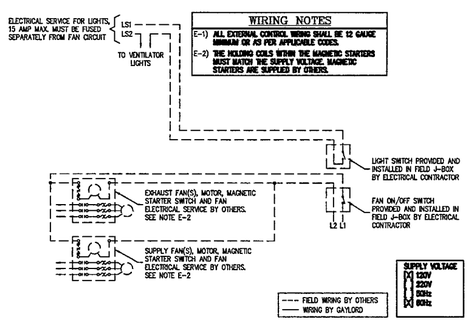

WIRING NOTES

E-1) ALL EXTERNAL CONTROL WIRING SHALL BE 12 GAUGE MINIMUM OR AS PER APPLICABLE CODES.
E-2) THE HOLDING COILS WITHIN THE MAGNETIC STARTERS MUST MATCH THE SUPPLY VOLTAGE. MAGNETIC STARTERS ARE SUPPLIED BY OTHERS.

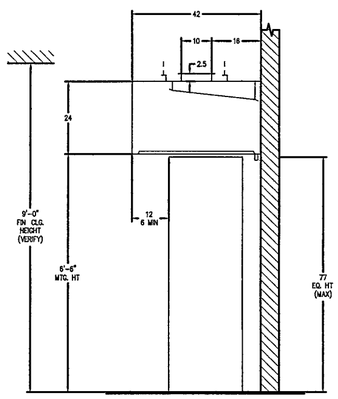

ITEM #21
SECTION VIEW

INSTALLATION INFORMATION

MAXIMUM VENTILATOR DIMENSION:
X=_____ L + X=_____ ft.
X=_____ ft.
TOTAL ESTIMATED HANGING WEIGHT: 150 _____ LBS.

VENTILATORS MANUFACTURED IN MULTIPLE SECTIONS ARE PROVIDED WITH BOLTS, CLIPS, AND ALL NECESSARY HARDWARE FOR RECONNECTING BY THE VENTILATOR INSTALLER. CONTROL AND LIGHTING WIRING ARE PRE-WIRED AND DISCONNECTED FOR SHIPMENT. WIRING MUST BE RECONNECTED BY APPLICABLE TRADES.

GAYLORD® INDUSTRIES, INC

MANUFACTURING TOLERANCE ± 1/4" (6mm)

MECHANICAL HOOD PLAN

NOT TO SCALE

WILLIAM J. CLINTON PRESIDENTIAL CENTER

LITTLE ROCK, ARKANSAS

Architect
POLSHEK PARTNERSHIP LLP
320 West 13th Street
New York, New York 10014
212 807 7171

Coordinating Architects
POLK STANLEY YEARY ARCHITECTS
700 South Schiller Street
Little Rock, Arkansas 72201
501 376 0878

WITSELL EVANS & RASCO
501 West Third Street
Little Rock, Arkansas 72201
501 374 5300

WOODS CARADINE ARCHITECTS
2200 South Main Street
Little Rock, Arkansas 72206
501 374 4060

Landscape Architects
HARGREAVES ASSOCIATES
118 Magazine Street
Cambridge Massachusetts 02139
617 661 0070

LANDSCAPE ARCHITECTURE, Inc.
2300 Cottondale Lane, Suite 202
Little Rock, Arkansas 72202
501.374 5610

Structural Engineer
LESLIE E ROBERTSON ASSOC RLLP
30 Broad Street, 47th Floor
New York, New York 10004
212.750 9000

MEP Engineers
FLACK + KURTZ Inc.
475 Fifth Avenue
New York, New York 10017
212 532.9600

CROMWELL ARCHITECTS ENGINEERS
101 South Spring Street
Little Rock, Arkansas 72201
501.372 2900

FoodService Consultants
NEXT STEP DESIGN, INC
1116 West Street, Suite C
Annapolis, Maryland 21401
410 263 1200

Seal

Issue	Date
100% Construction Docs.	9/27/02
100% Progress Printing	8/30/02
100% Construction	6/14/02
100% DD	2/28/02

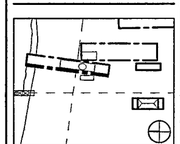

Job No
9908
Scale
-
Date
JUNE 14, 2002
Title
FOOD SERVICE MECHANICAL HOOD PLAN
Sheet No
FS-M1

FOR OFFICIAL USE ONLY