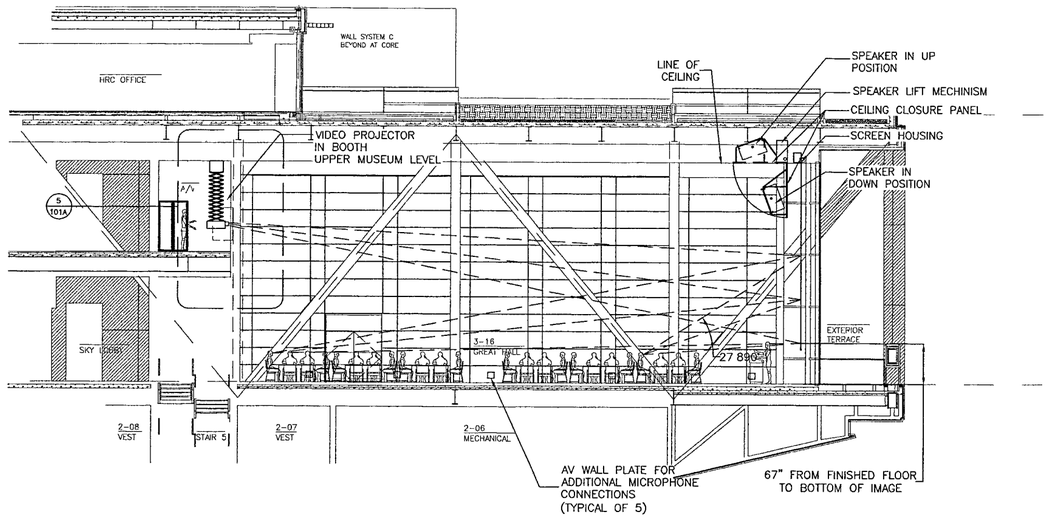

1 AUDIO-VISUAL FACILITY SECTION GREAT HALL
SCALE:1/8"=1'-0"

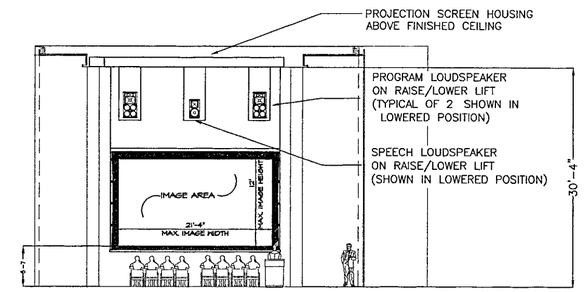

2 SCREEN WALL ELEVATION
SCALE:1/8"=1'-0"

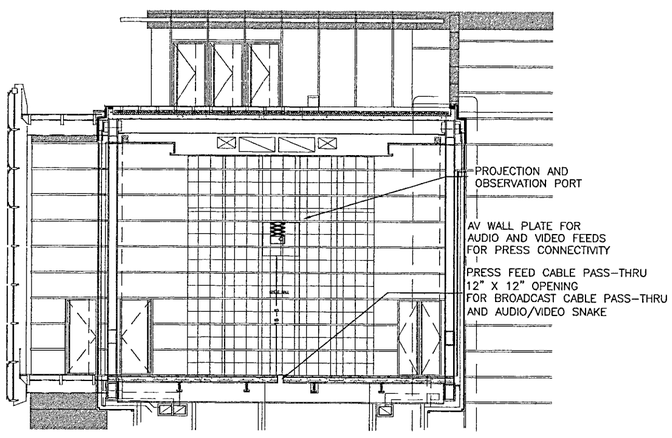

3 REAR WALL ELEVATION
SCALE:1/8"=1'-0"

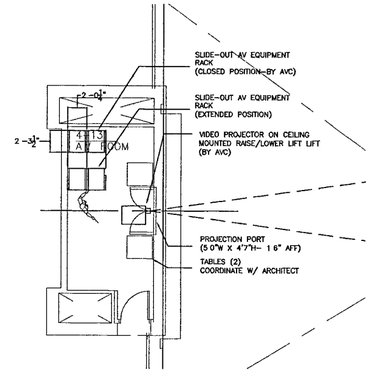

4 PROJECTION ROOM EQUIPMENT PLAN
SCALE:1/4"=1'-0"

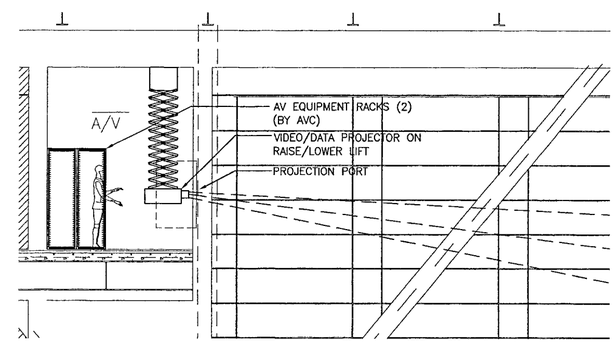

5 SECTION AT PROJECTION ROOM
SCALE:1/4"=1'-0"

FOR OFFICIAL USE ONLY

WILLIAM J CLINTON PRESIDENTIAL CENTER

LITTLE ROCK ARKANSAS

Architect

POLSHEK PARTNERSHIP LLP
320 West 13th Street
New York, New York 10014
212 807 7171

Coordinating Architects

POLK STANLEY YEARY ARCHITECTS Ltd
700 South Schiller Street
Little Rock Arkansas 72201
501 378 0878

WITSELL EVANS RASCO
901 West Third Street
Little Rock Arkansas 72201
501 374 5300

WOODS CARADINE ARCHITECTS
2200 South Main Street
Little Rock, Arkansas 72206
501 374 4060

Landscape Architects

HARGREAVES ASSOCIATES
115 Magazine Street
Cambridge, Massachusettes 02139
617 661 0070

LANDSCAPE ARCHITECTURE Inc
400 West Capitol Avenue
Suite 1600 Regions Center
Little Rock Arkansas 72201
501 374 5610

Structural Engineer

LESLIE E ROBERTSON ASSOC , RLLP
30 Broad Street 47th Floor
New York New York 10004
212 750 9000

MEP Engineers

FLACK + KURTZ Inc.
475 Fifth Avenue
New York New York 10017
212 532 9600

CROMWELL ARCHITECTS ENGINEERS
101 South Spring Street
Little Rock Arkansas 72201
501 372 2900

Acoustic & Audio-Visual Consultants

CERAMI & ASSOCIATES
317 MADISON AVENUE
NEW YORK , NEW YORK 10017
212 370 1776

Seal

Issue	Date
100% CONSTRUCTION DOCUMENTS	09/27/02
90% PROGRESS PRINT	08/30/02
CD PROGRESS PRINTING C&A	07/01/02
100% DD Issue C&A	03/01/02

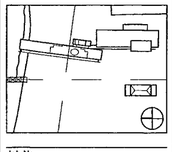

Job No
C&A 14545

Scale
AS SHOWN

Date
SEPTEMBER 27 2002

Title
GREAT HALL
ELEVATIONS AND SECTIONS

Sheet No
AV-101A