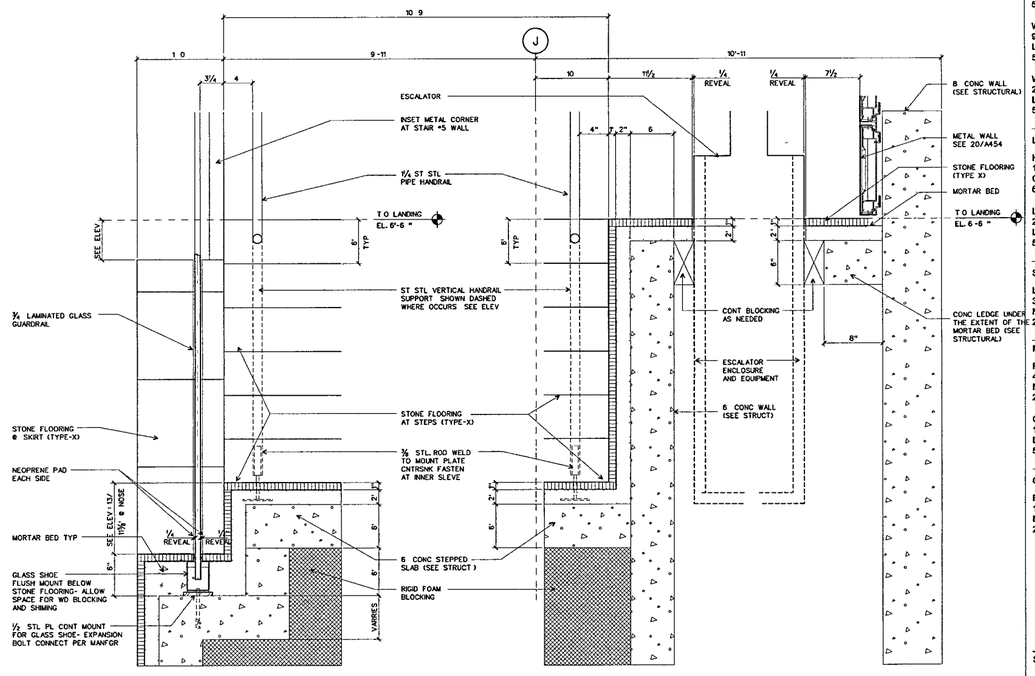

STAIR 7 : SECTION THRU ESCALATOR PLAT. (20)

SCALE 1½" =1-0"

STAIR 7- SECTION THRU SKIRT / GUARDRAIL (21)

SCALE 1½" =1-0

XXXX (22)

SCALE 1½' =1-0'

XXXX (23)

SCALE 1½ =1-0

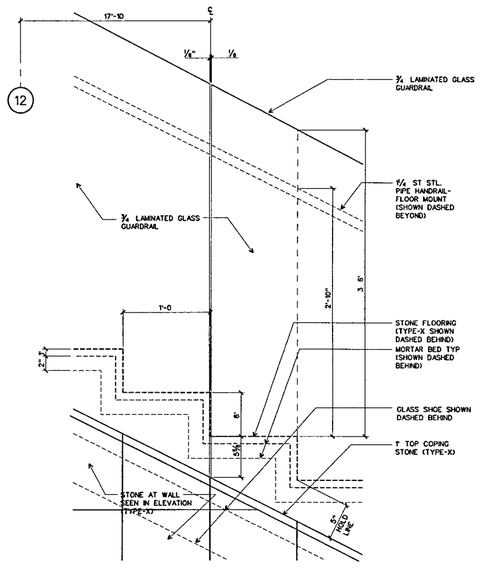

STAIR 7 : ENLARGED ELEVATION (13)

SCALE 1½ =1-0

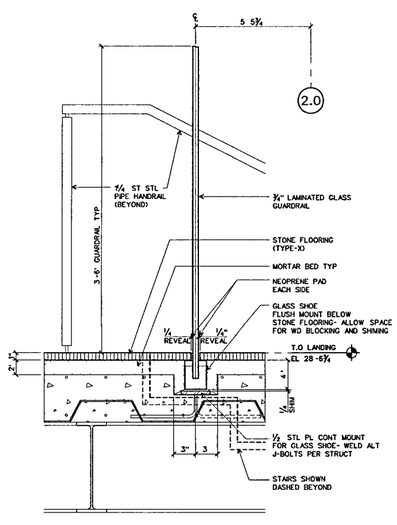

STAIR 1- GLASS RAIL AT LANDING (12)

SCALE 1½' =1-0"

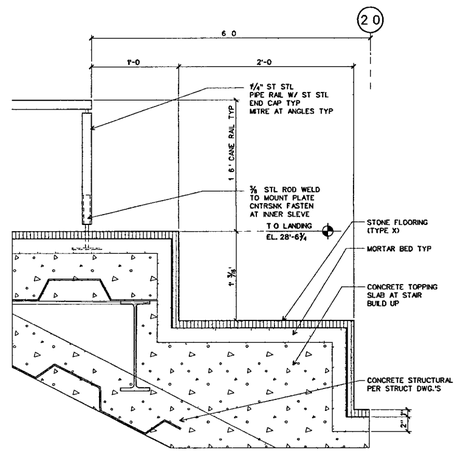

STAIR 1- STADIUM SEATING (11)

SCALE 1½" =1-0

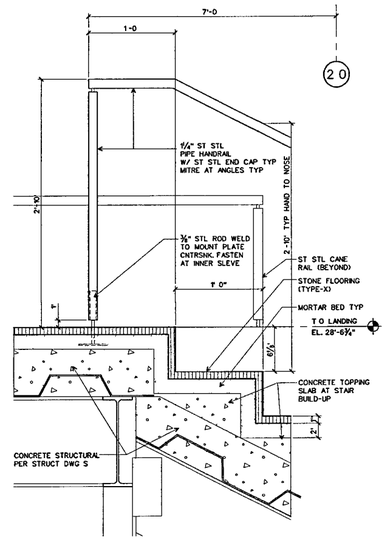

STAIR 1 (STAIR 7 SIM.)- PLAN AT LANDING (10)

SCALE 1½ =1-0"

WILLIAM J CLINTON PRESIDENTIAL CENTER

LITTLE ROCK, ARKANSAS

Architect

POLSHEK PARTNERSHIP LLP
320 West 13th Street
New York, New York 10014
212 807 7171

Coordinating Architects

POLK STANLEY YEARY ARCHITECTS Ltd
700 South Schiller Street
Little Rock, Arkansas 72201
501 378 0878

WITSELL EVANS RASCO
901 West Third Street
Little Rock, Arkansas 72201
501 374 5300

WOODS CARADINE ARCHITECTS
2200 South Main Street
Little Rock, Arkansas 72206
501 374 4060

Landscape Architects

HARGREAVES ASSOCIATES
116 Magazine Street
Cambridge, Massachusettes 02139
617 661 0070

LANDSCAPE ARCHITECTURE, Inc.
2300 Cottondale Lane Suite 202
Little Rock, Arkansas 72202
501 374 5810

Structural Engineer

LESLIE E ROBERTSON ASSOC , RLLP
30 Broad Street, 47th Floor
New York New York 10004
212 750 9000

MEP Engineers

FLACK + KURTZ Inc.
475 Fifth Avenue
New York, New York 10017
212 532 9600

CROMWELL ARCHITECTS ENGINEERS
101 South Spring Street
Little Rock Arkansas 72201
501 372 2900

Curtainwall Consultant

R A. HEINTGES ARCHITECTS
125 Fifth Avenue 9th Floor
New York, New York 10011
212 652-2966

Seal

Issue	Date
100% Construction Documents	09/27/02

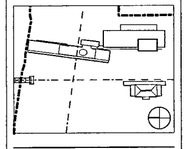

Job No 9908

Scale 1 1/2" = 1'-0"

Date September 27, 2002

Title

MUSEUM BUILDING ORNAMENTAL STAIR DETAILS

Sheet No

A501a

FOR OFFICIAL USE ONLY