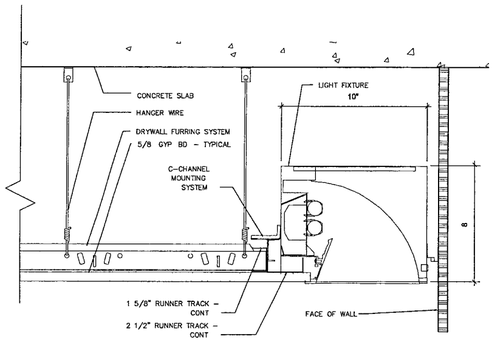

CEILING DETAIL (43)
SCALE 3" = 1'–0"

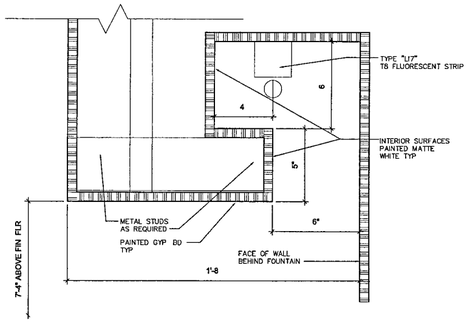

CEILING DETAIL – @ WATER FOUNTAIN (42)
SCALE 3" = 1'–0"

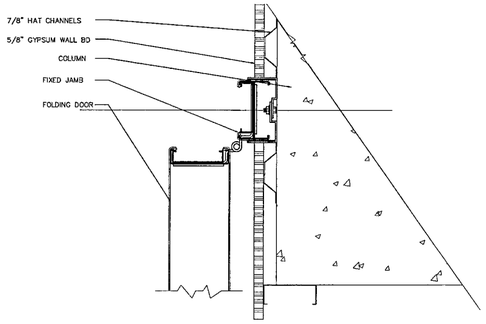

FOLDING DOOR DETAIL (41)
SCALE 3" = 1'–0"

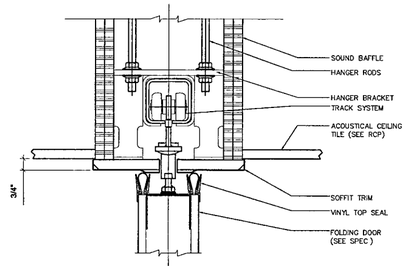

FOLDING DOOR DETAIL (40)
SCALE 3" = 1'–0"

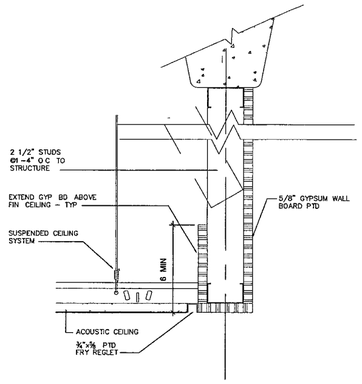

CEILING DETAIL (33)
SCALE 3" = 1'–0"

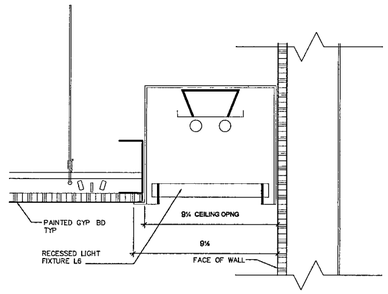

CEILING DETAIL – @ TOILET ROOMS (32)
SCALE 3" = 1'–0"

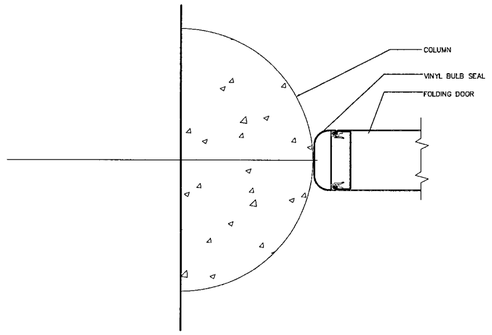

FOLDING DOOR DETAIL (31)
SCALE 3" = 1'–0"

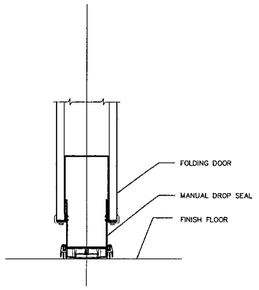

FOLDING DOOR DETAIL (30)
SCALE 3" = 1'–0"

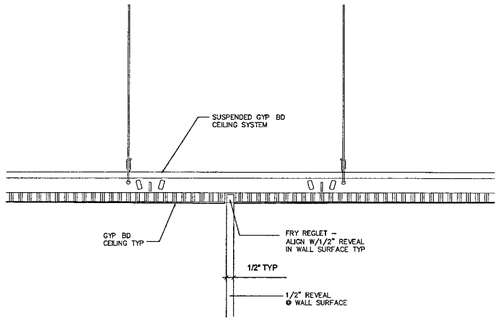

REVEAL JOINT AT 1–13 NORTH CORR CEILING (23)
SCALE 3" = 1'–0"

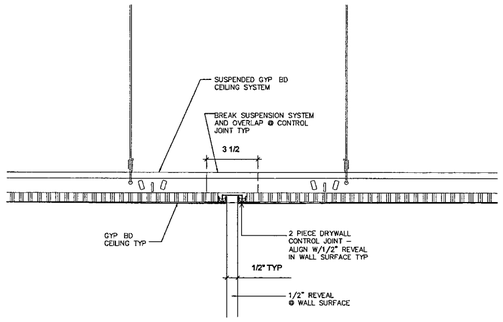

CONTROL JOINT AT 1–13 NORTH CORR CEILING (22)
SCALE 3" = 1'–0"

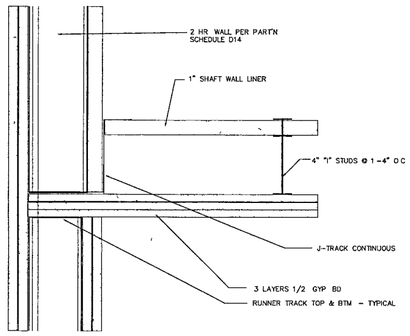

RATED CEILING DETAIL (21)
SCALE 3" = 1'–0"

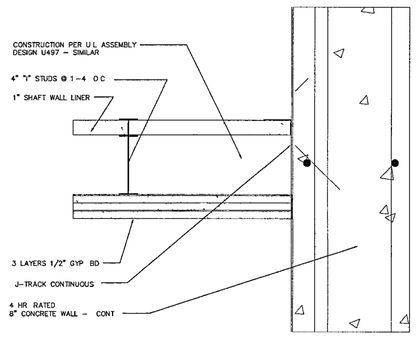

RATED CEILING DETAIL (20)
SCALE 3" = 1'–0"

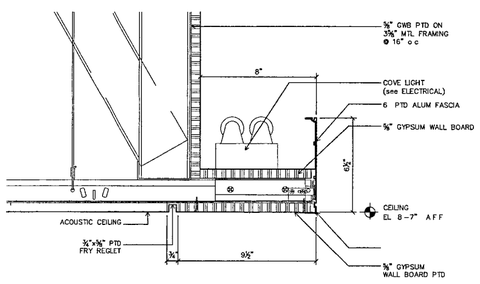

LIGHT COVE AT 2–18 CORRIDOR (13)
SCALE 3" = 1'–0"

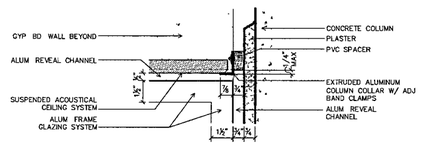

REVEAL DETAIL AT COLUMN (12)
SCALE 3" = 1'–0"

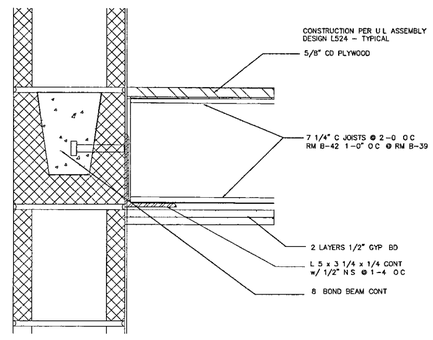

RATED CEILING DETAIL (11)
SCALE 3" = 1'–0"

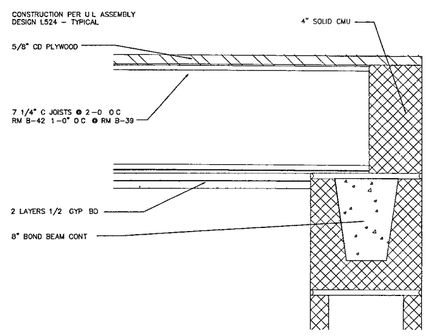

RATED CEILING DETAIL (10)
SCALE 3" = 1'–0"

WILLIAM J CLINTON PRESIDENTIAL CENTER

LITTLE ROCK, ARKANSAS

Architect

POLSHEK PARTNERSHIP LLP
320 West 13th Street
New York, New York 10014
212 807 7171

Coordinating Architects

POLK STANLEY YEARY ARCHITECTS Ltd
700 South Schiller Street
Little Rock, Arkansas 72201
501 378 0878

WITSELL EVANS RASCO
901 West Third Street
Little Rock Arkansas 72201
501 374 5300

WOODS CARADINE ARCHITECTS
2200 South Main Street
Little Rock, Arkansas 72206
501 374 4060

Landscape Architects

HARGREAVES ASSOCIATES
118 Magazine Street
Cambridge, Massachusetts 02139
617 661 0070

LANDSCAPE ARCHITECTURE, Inc
2300 Cottondale Lane Suite 202
Little Rock, Arkansas 72202
501 374 5610

Structural Engineer

LESLIE E ROBERTSON ASSOC , RLLP
30 Broad Street, 47th Floor
New York, New York 10004
212 750 9000

MEP Engineers

FLACK + KURTZ Inc
475 Fifth Avenue
New York, New York 10017
212 532.9600

CROMWELL ARCHITECTS ENGINEERS
101 South Spring Street
Little Rock, Arkansas 72201
501 372.2900

Curtainwall Consultant

R. A HEINTGES ARCHITECTS
126 Fifth Avenue, 9th Floor
New York, New York 10011
212 652 2966

Seal

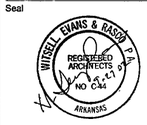

Issue	Date
100% Construction Documents	09/27/02
90% Progress Printing	08/30/02

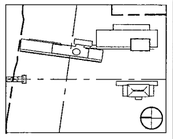

Job No 9908

Scale AS NOTED

Date September 27, 2002

Title
ARCHIVE BUILDING
INTERIOR DETAILS
CEILING DETAILS

Sheet No
A478

FOR OFFICIAL USE ONLY