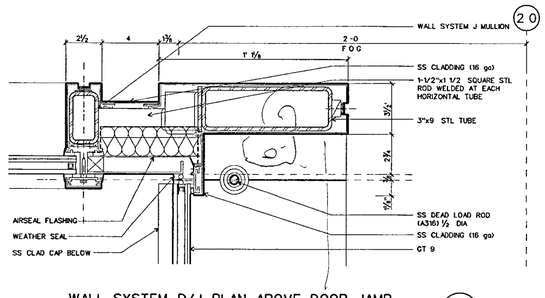

WALL SYSTEM D/J PLAN ABOVE DOOR JAMB (33)
SCALE 3" = 1'-0" D-CWDE03

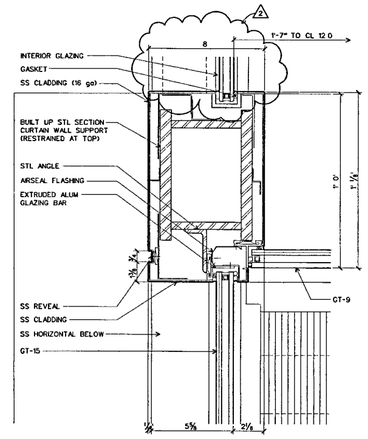

WALL SYSTEM D/K: PLAN DETAIL ABOVE DOOR (42)
SCALE 3" = 1'-0" D-CWDE03

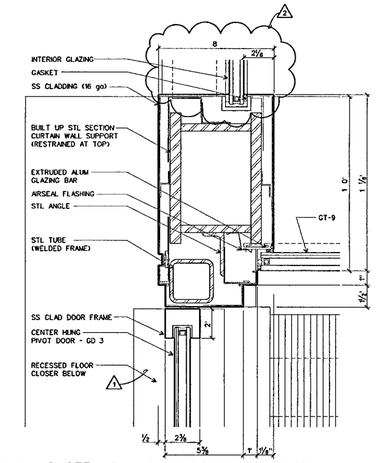

WALL SYSTEM D/K: PLAN DETAIL AT DOOR (41)
SCALE 3" = 1'-0" D-CWDE03

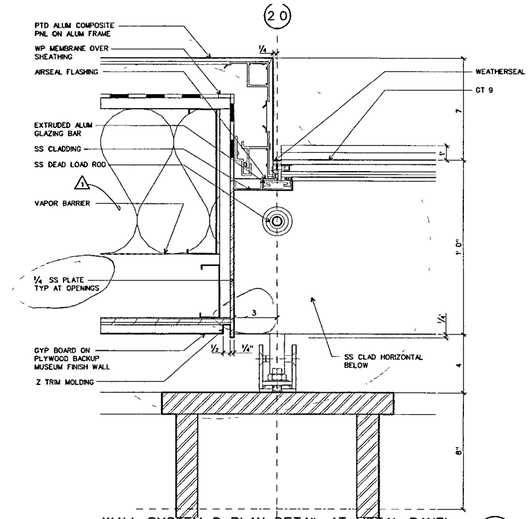

WALL SYSTEM D: PLAN DETAIL AT METAL PANEL (40)
SCALE 3" = 1'-0" D-CWDE03

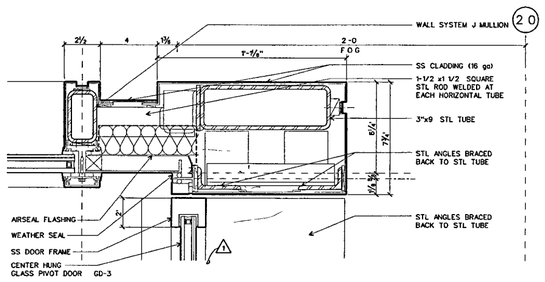

WALL SYSTEM D/J: PLAN DETAIL AT DOOR JAMB (23)
SCALE 3" = 1'-0" D-CWDE03

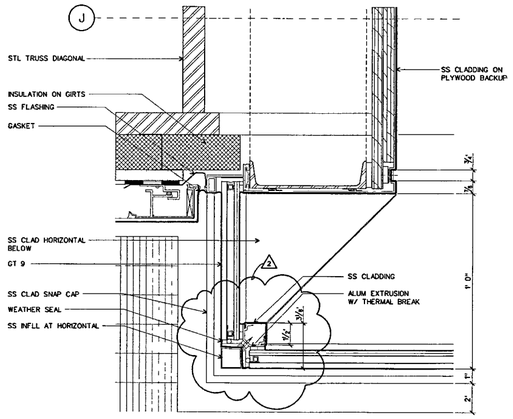

WALL SYSTEM D PLAN DETAIL AT CORNER (22)
SCALE 3" = 1'-0" D-CWDE03

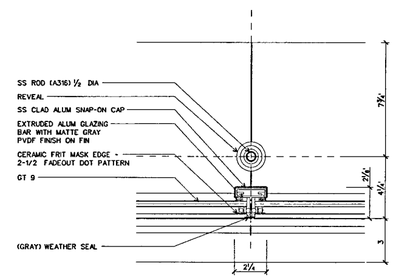

WALL SYSTEM D: PLAN AT DEAD LOAD SUPPORT (21)
SCALE 3" = 1'-0" D-CWDE03

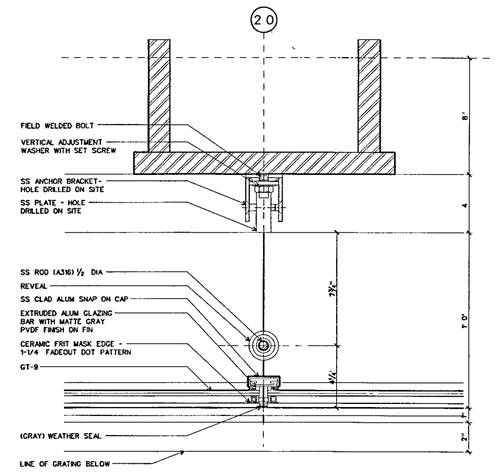

WALL SYSTEM D: PLAN DETAIL AT TRUSS VERTICAL (20)
SCALE 3" = 1'-0" D-CWDE03

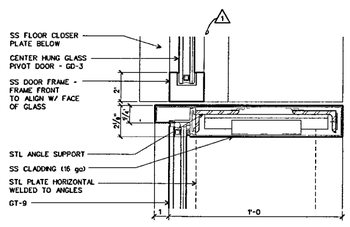

WALL SYSTEM D: PLAN DETAIL AT DOOR JAMB (13)
SCALE 3 = 1-0 D-CWDE03

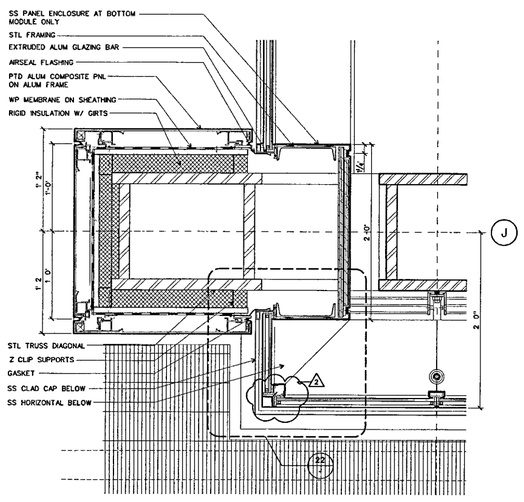

WALL SYSTEM D: PLAN DETAIL AT METAL PANEL (12)
SCALE 1-1/2 = 1-0 D-CWDE03

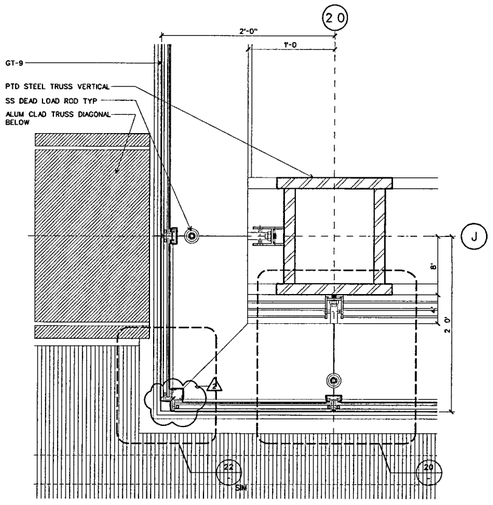

WALL SYSTEM D: PLAN AT CORNER (11)
SCALE 1-1/2 = 1-0 D-CWDE03

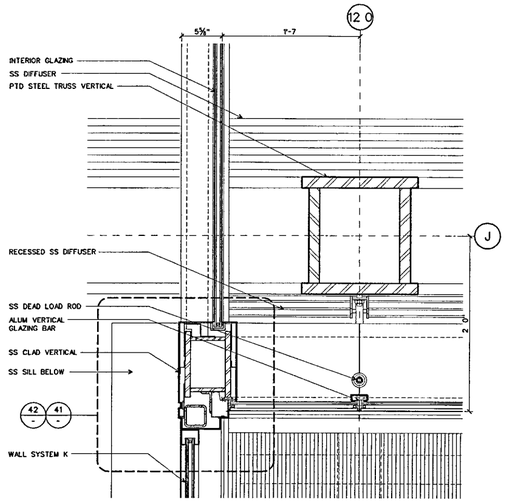

WALL SYSTEM D/K: PLAN AT ESCALATOR (10)
SCALE 1-1/2" = 1-0" D-CWDE03

WILLIAM J CLINTON PRESIDENTIAL CENTER

LITTLE ROCK, ARKANSAS

Architect

POLSHEK PARTNERSHIP LLP
320 West 13th Street
New York, New York 10014
212.807 7171

Coordinating Architects

POLK STANLEY YEARY ARCHITECTS Ltd
700 South Schiller Street
Little Rock, Arkansas 72201
501 378 0878

WITSELL EVANS RASCO
901 West Third Street
Little Rock, Arkansas 72201
501 374 5300

WOODS CARADINE ARCHITECTS
2200 South Main Street
Little Rock, Arkansas 72206
501 374 4060

Landscape Architects

HARGREAVES ASSOCIATES
118 Magazine Street
Cambridge, Massachusettes 02139
617 661 0070

LANDSCAPE ARCHITECTURE, Inc.
2300 Cottondale Lane Suite 202
Little Rock, Arkansas 72202
501 374 5810

Structural Engineer

LESLIE E. ROBERTSON ASSOC., RLLP
30 Broad Street, 47th Floor
New York New York 10004
212.750 9000

MEP Engineers

FLACK + KURTZ Inc.
475 Fifth Avenue
New York, New York 10017
212 532.9600

CROMWELL ARCHITECTS ENGINEERS
101 South Spring Street
Little Rock, Arkansas 72201
501 372 2900

Curtainwall Consultant

R. A. HEINTGES ARCHITECTS
126 Fifth Avenue, 9th Floor
New York, New York 10011
212 652-2966

Seal

RICHARD OLCOTT ARCHITECT 3405 ARKANSAS

Issue	Date
100% Construction Documents	09/27/02
90% Progress Printing	08/30/02
100% Struct./ CD Progress	07/01/02
100% Design Development	03/01/02

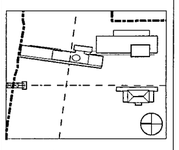

Job No: 9908

Scale: AS NOTED

Date: September 27, 2002

Title: WALL SYSTEMS D PLAN DETAILS

Sheet No: A368

FOR OFFICIAL USE ONLY