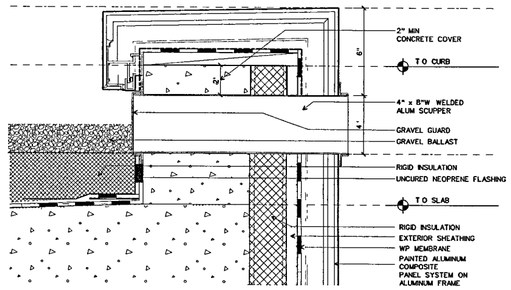

WALL SYSTEM C: GENERIC DETAIL SECTION FOR SCUPPER CONDITION

SCALE 3 = 1-0 D-CWC05 41

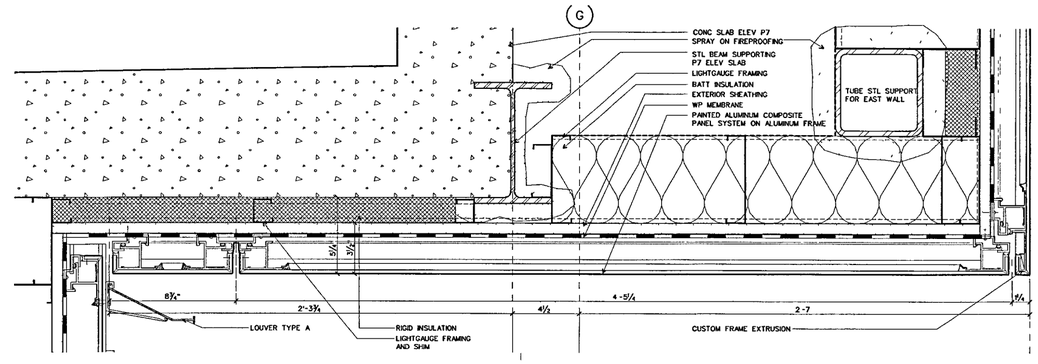

WALL SYSTEM C: SECTION DETAIL @ UNDERSIDE EAST-UNDER PE7

SCALE 3 = 1-0 D-CWC05 40

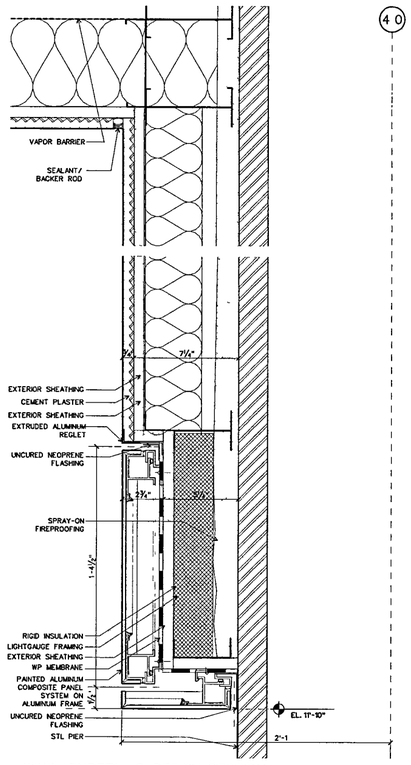

WALL SYSTEM C: DETAIL SECTION @ NORTH PIER/STAIR 2

SCALE 3' = 1-0" D-CWC05 25

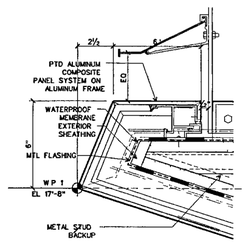

WALL SYSTEM C: SECTION DETAIL @ UNDERSIDE WEST

SCALE 3' = 1'-0 D-CWC05 24

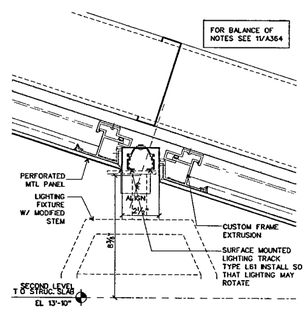

WALL SYSTEM C SECTION DETAIL @ UNDERSIDE WEST-MID-LIGHTING

SCALE 3' = 1'-0' D-CWC05 23

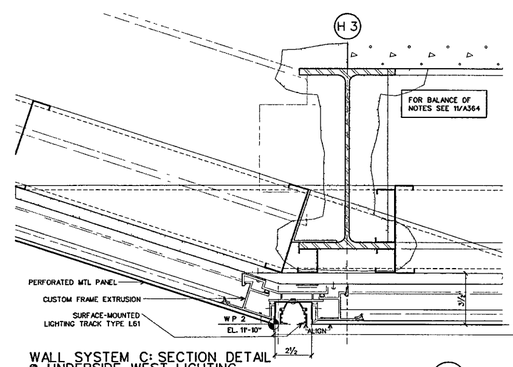

WALL SYSTEM C: SECTION DETAIL @ UNDERSIDE WEST-LIGHTING

SCALE 3" = 1-0" D-CWC05 22

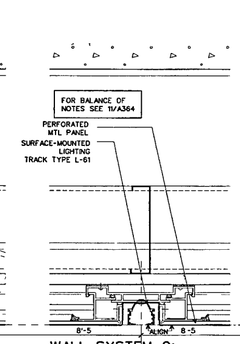

WALL SYSTEM C: SECTION DETAIL @ UNDERSIDE CTR-LIGHTING

SCALE 3" = 1'-0" D-CWC05 21

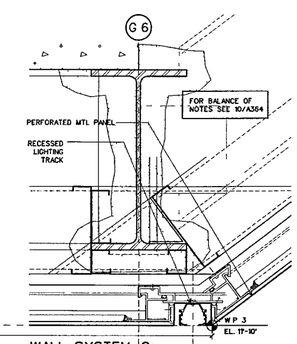

WALL SYSTEM C: SECTION DETAIL @ UNDERSIDE EAST-LIGHTING

SCALE 3" = 1'-0" D-CWC05 20

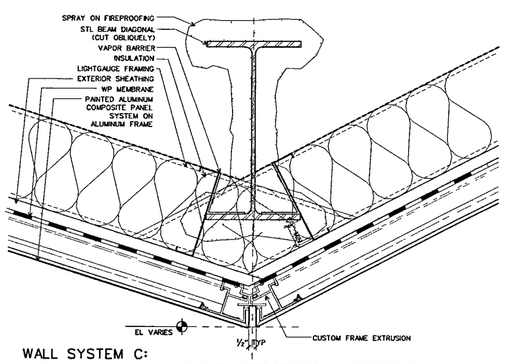

WALL SYSTEM C: SECTION DETAIL @ 2-PLANE INTERSECTION, UNDERSIDE

SCALE 3" = 1'-0' D-CWC05 13

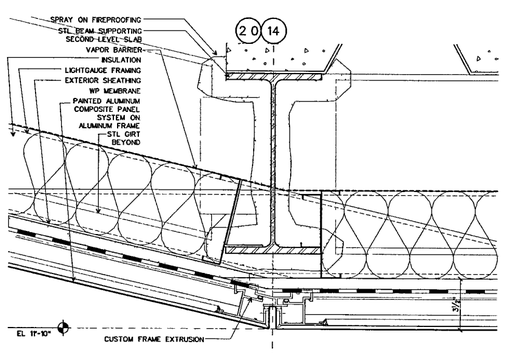

WALL SYSTEM C: SECTION DETAIL @ UNDERSIDE NORTH/SOUTH

SCALE 3 = 1-0' D-CWC05 12

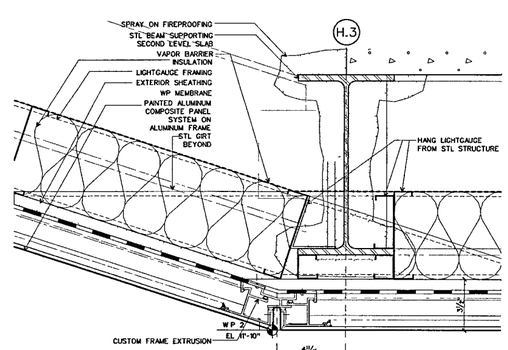

WALL SYSTEM C: SECTION DETAIL @ UNDERSIDE WEST

SCALE 3 = 1-0 D-CWC05 11

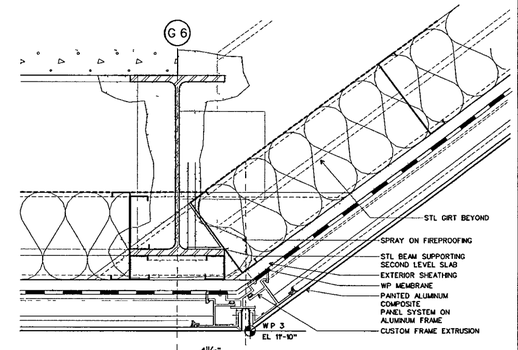

WALL SYSTEM C: SECTION DETAIL @ UNDERSIDE EAST

SCALE 3' = 1-0" D-CWC05 10

WILLIAM J CLINTON PRESIDENTIAL CENTER

LITTLE ROCK, ARKANSAS

Architect

POLSHEK PARTNERSHIP LLP
320 West 13th Street
New York, New York 10014
212.807 7171

Coordinating Architects

POLK STANLEY YEARY ARCHITECTS Ltd
700 South Schiller Street
Little Rock, Arkansas 72201
501 378 0878

WITSELL EVANS RASCO
901 West Third Street
Little Rock, Arkansas 72201
501 374 5300

WOODS CARADINE ARCHITECTS
2200 South Main Street
Little Rock Arkansas 72206
501 374.4060

Landscape Architects

HARGREAVES ASSOCIATES
118 Magazine Street
Cambridge Massachusetts 02139
617 661 0070

LANDSCAPE ARCHITECTURE, Inc.
2300 Cottondale Lane Suite 202
Little Rock, Arkansas 72202
501 374 5610

Structural Engineer

LESLIE E. ROBERTSON ASSOC RLLP
30 Broad Street, 47th Floor
New York, New York 10004
212.750 9000

MEP Engineers

FLACK + KURTZ Inc.
475 Fifth Avenue
New York, New York 10017
212 532.9600

CROMWELL ARCHITECTS ENGINEERS
101 South Spring Street
Little Rock, Arkansas 72201
501 372.2900

Curtainwall Consultant

R. A. HEINTGES ARCHITECTS
126 Fifth Avenue, 9th Floor
New York, New York 10011
212.652-2966

Seal

RICHARD OLCOTT REGISTERED ARCHITECT 3405 ARKANSAS

Issue	Date
1 100% Construction Documents*	09/27/02

*New sheet. Former details now on A362 A363

Job No 9908

Scale 3" = 1-0"

Date September 27, 2002

Title WALL SYSTEM C GLAZING DETAILS

Sheet No 1 A364

FOR OFFICIAL USE ONLY