THE WILLIAM J. CLINTON PRESIDENTIAL CENTER

LITTLE ROCK, ARKANSAS

100% CONSTRUCTION DOCUMENTS

PART ONE

SE EMBER 27, 2002

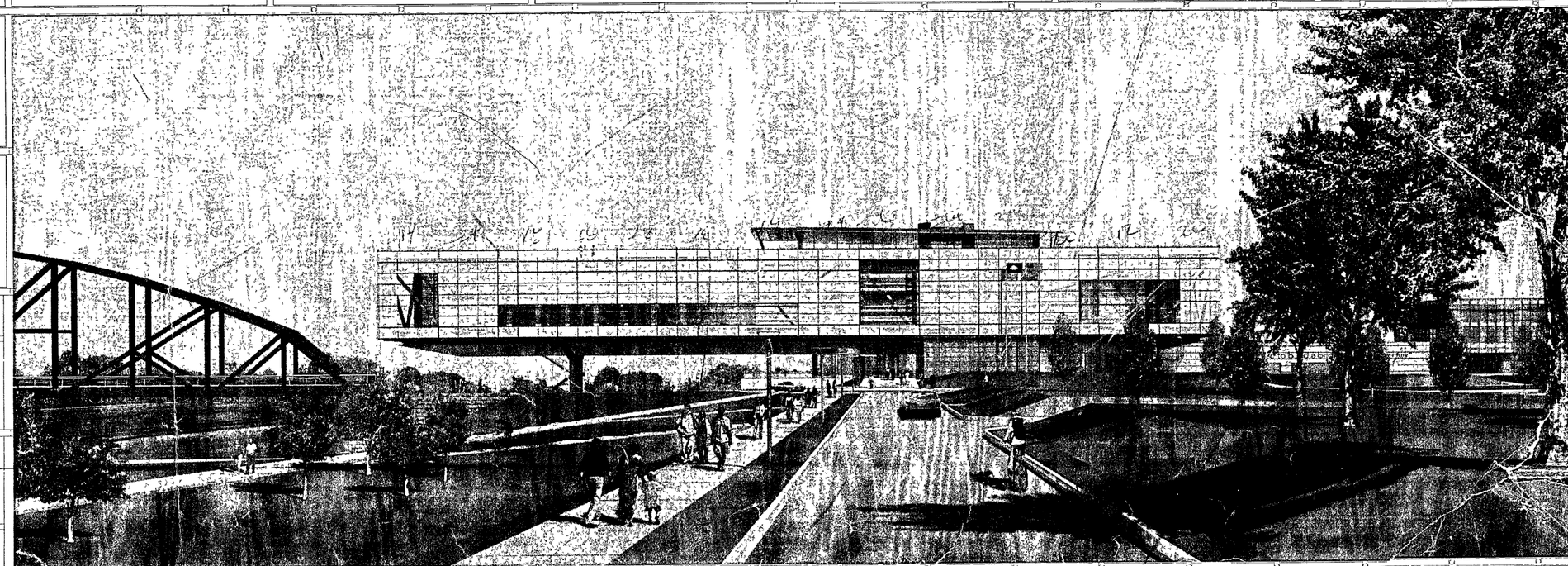

POLSHEK PARTNERSHIP ARCHITECTS, LLP / POLK STANLEY YEARY ARCHITECTS, LTD
WITSELL EVANS & RASCO / WOODS CARADINE ARCHITECTS

PART ONE

ARCHITECTURAL DRAWINGS

	Cover Sheet
A001	Drawing List Abbreviations and Symbols
A002	Site Plan
A003	Key Plans
A100a	*Not Used.*
A100b	Basement Level Partial Plan
A100c	Basement Level Partial Plan
A100d	Basement Level Partial Plan *(formerly A100c)*
A101a	*Not Used*
A101b	Ground Level Partial Plan
A101c	Ground Level Partial Plan
A101d	Ground Level Partial Plan *(formerly A101c)*
A102a	Second Level Partial Plan
A102b	Second Level Partial Plan
A102c	*Not Used*
A102d	Second Level Partial Plan *(formerly A102c)*
A103a	Museum Lower Level Partial Plan
A103b	Museum Lower Level Partial Plan
A103c	*Not Used*
A103d	Third Level Partial Plan *(formerly A103c)*
A104a	Museum Upper Level Partial Plan
A104b	Museum Upper Level Partial Plan
A104c	*Not Used*
A104d	*Not Used*
A105a	Executive Level Partial Plan *(formerly A106a)*
A105b	Executive Level Partial Plan
A105c	*Not Used*
A105d	*Not Used*
A106a	*Deleted + Renamed A105a*
A106b	Roof Partial Plan
A106c	Roof Partial Plan
A106d	Roof Partial Plan
A200	Museum Building West Elevation
A201	Museum Building West Elevation
A202	Museum Building East Elevation
A203	Museum Building North and South Elevations
A204	Archive Building Elevations
A205	Archive Building Elevations
A206	Museum Building Longitudinal Section
A207	Archive Building Sections
A300	*Deleted*
A301	*Not Used*
A302	Museum Building Sections
A303	Museum Building Sections
A304	Museum Building Sections
A305	Museum Building Sections
A306	Museum Building Section
A307	Museum Building Section
A308	Museum Building Section
A309	Museum Building Section
A310	Archive Building Sections
A311	Archive Building Partial Sections
A320	Wall System A1 Plans Elevation and Section
A321	Wall System A1 Plans and Sections
A322	Wall System A1 Plans Elevation and Sections
A323	Wall Systems A2 Sections
A324	Wall System A2 and A3 Plans
A325	Wall System A3 Plan, Elevation and Sections
A325a	Wall System A3 Elevation and Sections
A326	Wall System C Elevation, Plan and Section
A327	Wall System C Plans and Sections
A328	Wall System C Plan and Sections *(includes Details from Former A331)*
A329	*Deleted (Renamed to A330)*
A330	Wall System C+ Section and Developed RCP *(New sheet + old A330 renamed A331)*
A331	Wall System C Section and Developed RCP *(Sheet A330 renamed A331. Details from former A331 moved to A328)*
A332	*Not Used*
A333	Wall System D Elevation and Section
A334	Wall Systems D + E Elevation and Section
A335	Wall Systems D + E Plans and Section
A336	Wall System F Plan Elevation and Section+
A337	Wall System F Elevation and Detail
A338	Wall System F Plans Elevation and Sections *+A336, A337 A338, A371 Rearranged See A336 A337 A338 and A371*
A339	Archive Building Stair 11 Wall Sections
A339a	Wall System G+ Plan, Elevation and Sections
A340	Wall System G Plan Elevation and Sections
A341	Wall System G Plans
A342	Wall System H Plans/ Sections at Neck Connector
A343	Wall Systems H Plan Elevation and Sections
A344	Wall System H Plan and Sections
A345	Wall System J+ Plan and Sections
A346	Wall System K + E Elevation and Sections
A347	Wall System K Plan and Sections
A348	Entrance Canopy Plan and Elevation
A349	Entrance Canopy Section
A355	Wall System A1+ Section Details
A356	Wall System A1 + A2 Plan Details
A357	Wall System A2 Section Details
A358	Wall System A3 Section and Plan Details
A359	*Deleted (some details moved to A358)*
A360	Wall System C Plaza and Base Detail Sections
A361	Wall System C Detail Sections *(Some details rearranged onto sheets A362 A363, A364)*
A362	Wall System C Detail Sections & Plans
A363	Wall System C Glazing Details
A364	Wall System C Glazing Details *(New sheet Details on former A364 now on A362 A363)*
A365	Wall System D + E Detail Sections
A366	Wall System D Section Details
A367	Wall System D Section Details
A368	Wall System D+ Plan Details
A368a	Wall System D+ Miscellaneous Details
A369	Wall System E Plan and Section Details
A370	Wall System E Plan and Section Details
A371	Wall System F Sections+
A372	Archive Building Roof Details
A373	*Deleted* *A336, A337 A338, A371 Rearranged See A336, A337 A338 and A371*
A374	*Not Used*
A375	Wall System G- Detail Plans & Sections
A376	*Not Used*
A377	Wall System H Glass Plans and Sections
A378	Wall System H Glass Plan and Section Details
A379	Wall System F &H Plan and Sections
A380	Wall System J- Details
A381	*Not Used*
A382	Wall System K Detail Sections
A383	Wall System K Plan & Section Details
A384	*Not Used*
A385	*Deleted (Consolidated into A360)*
A386	Museum Building Roof Details
A387	*Not Used*
A388	Museum Building Roof Details - Exec Lvl Roof & Skylight
A389	Museum Building Sunscreen Executive Level
A390	Expansion Joint Details
A391	Museum Building Exterior Railing Details
A392	Museum Building Exterior Railing Details
A397	Archive Building Miscellaneous Details
A400	Partition Types
A401	Door Types *(Sheet used to be named A402)*
A402	Door Details *(New sheet Former A402 renamed to A401)*
A403	Door Details
A404	Door Details
A405	Door Details
A406	Door/Window Details
A407	Sill Details *(New sheet Former A407 renamed to A409)*
A408	*Not Issued*
A409	*Not Issued*
A410	Interior Materials Finish Abbreviations and Device Mounting Heights
A411	Museum Building Interior Elevations Basement **
A412	Museum Building Interior Elevations Ground Floor
A413	Museum Building Interior Elevations**
A414	Museum Building Interior Elevations+
A415	Museum Building Interior Elevations**
A416	*Deleted (Details moved to A412 and A551)*
A417	*Deleted (Details moved to A412 A551, A521.1)*
A418	*Deleted (Details moved to A551)*
A419	*Deleted (Details moved to A412 A413)*
A420	Museum Building Interior Elevations Glass Railings + *(Dtls moved to A414 A415)*
A421	*Deleted (Sheet renamed A432)*
A422	*Deleted (Sheet renamed A433)* *++A400 sheets rearranged as interior details were developed*
A430	Interior Elevations Archive
A431	Interior Elevations Archive
A432	Interior Elevations Archive *(Formerly Sheet A421)*
A433	Interior Elevations Archive *(Formerly Sheet A422)*
A434	Interior Elevations Archive
A435	Cold Storage Plans Sections, Details
A436	NARA Holding Plans Sections Details
A440	*Deleted (Details moved to A522.1 and A524.1)*
A441	*Deleted (Details moved to A523.1)*
A442	*Deleted (Details moved to A525.1 and A526.1)*
A450	Museum Interior Details Interior Storefront Systems *(Former A450 details moved to A522.1, 524.1 and A526.1)*
A451	Museum Building Interior Details Interior Storefront Systems *(Former A451 details moved to A523.1)*
A452	Museum Building Interior Details Interior Storefront Systems *(Former A452 details moved to A525.1)*
A453	Museum Building Interior Details Interior Storefront Systems
A454	Museum Building Interior Details Metal Panel Systems
A455	Museum Building Interior Details Stone
A456	*Not Used*
A457	Museum Building Interior Details Metal Panel Systems
A458	Museum Building Wood Panel System Details**
A459	Museum Building Wood Panel System- Details**
A460	Museum Building Wood Panel System- Details**
A461	Museum Building Ceiling Details+ *+ A400 sheets rearranged as interior details were developed*
A470	Archive Building Interior Details
A471	Archive Building Interior Details *(Former A471 details moved to Door Detail Sheets)*
A472	Archive Building Interior Details *(Former A472 details moved to A471, A473, A474)*
A473	Archive Building Interior Details
A474	Archive Building Interior Details
A475	Archive Building Interior Details
A476	Archive Building Interior Details
A477	Archive Building Interior Details
A478	Archive Building Interior Details Ceiling Details
A479	Archive Building Interior Details Floor and Base Details
A490	Archive Building Millwork (Lobby/Reception)
A491	Millwork Sections Archive Ground Level
A492	Millwork Sections Archive Upper Levels
A493	Millwork Sections Archive Upper Levels
A500	Museum Building Ornamental Stair Plans and Sections (1/3/7) **
A501	Museum Building Ornamental Stair Details+ *(New Sheet Former A501 details on A502)*
A501a	Museum Building Ornamental Stair Details***
A502	Museum Building Stair 2 Plans and Sections*** *(Issued originally as A501. Former A502 details moved to A505)*
A503	Museum Building Stair 2 Details*** *(New Sheet Former A503 details on A506)*
A504	*Not Used*
A505	Museum Building Stair 4 Plans and Sections+ *(Issued originally as A502 Former A505 details on A510)*
A506	Museum Building Stair 5+ Plans and Sections*** *(Issued originally as A503 Former A506 details on A511)*
A507	Museum Building Stair 6 Plans and Sections** *(New sheet. Issued originally as A504)*
A508	*Not Used*
A509	*Not Used*
A510	Stairs 8/9/12*** *(New sheet Issued originally as A505)*
A511	Stairs 10/11 ** *(New sheet Issued originally as A506)* ****A500 sheets rearranged as stair details were developed*
A512	Stair Details
A513	Stair Details
A514	Stair Details
A515	Fire Stair - Typical Details
A521	Escalator Plans
A521.1	Escalator Plans and Details
A522	Elevator Layout
A522.1	Elevator P1/P2 Plans Sections Interior Elevations *(New sheet details moved from former sheet A440)*
A523	Elevator Layout
A523.1	Elevator F3 Plans Sections Interior Elevations *(New sheet details moved from former sheet A441)*
A524	Elevator Layout
A524.1	Elevator P7 Plans, Section Interior Elevations *(New sheet details moved from former sheet A440)*
A525	*Not Used*
A525.1	Elevator S4 Plans Sections Elevations
A526	*Deleted (Former A526 details moved to A530)*
A526.1	Elevator P6 Plans Sections Elevations
A527	*Deleted (Former A527 details moved to A530)*
A527.1	Elevator F5 Plans Sections Elevations
A528	*Deleted (Former A528 details moved to A531)*
A530	Museum Building Restrooms Plans and Elevations *(Details formerly issued on sheets A526 and A527)*
A531	Museum Building Restrooms Plans Elevations & Schedule *(Details formerly issued on sheet A528)*
A532	Museum Building Restrooms Plans and Elevations
A533	Restrooms - Plans Elevations & Schedules
A534	Core + Plans Elevations & Schedules
A535	Core + Plans Elevations & Schedules
A540	*Deleted*
A541	*Deleted*
A550	Geometry Drawing of Oval Office Structural Dome
A551	Orientation Theater Enlarged Plans and Elevations
A600a	*Not Issued*
A600b	Basement Level Partial Reflected Ceiling Plan
A600c	Basement Level Partial Reflected Ceiling Plan
A600d	Basement Level Partial Reflected Ceiling Plan *(Formerly A600c)*
A601a	Ground Level Partial Reflected Ceiling Plan
A601b	Ground Level Partial Reflected Ceiling Plan
A601c	Ground Level Partial Reflected Ceiling Plan
A601d	Ground Level Partial Reflected Ceiling Plan *(Formerly A601c)*
A602a	Second Level Partial Reflected Ceiling Plan
A602b	Second Level Partial Reflected Ceiling Plan
A602c	*Not Used*
A602d	Second Level Reflected Ceiling Plan *(Formerly A602c)*
A603a	Museum Lower Level Partial Reflected Ceiling Plan
A603b	Museum Lower Level Partial Reflected Ceiling Plan
A603c	*Not Used*
A603d	Third Level Reflected Ceiling Plan *(Formerly A603c)*
A604a	Museum Upper Level Partial Reflected Ceiling Plan
A604b	Museum Upper Level Partial Reflected Ceiling Plan
A604c	*Not Used*
A604d	*Not Used*
A605a	*Not Used*
A605b	Executive Level Reflected Ceiling Plan
A605c	*Not Used*
A606d	*Not Used*
A710	*Renamed S220.1*
A711	*Renamed S220.2*
A720	*Deleted*
A721	*Deleted*
FM-1	*Deleted*
FM-2	Facade Maintenance System Sections and Details
FM-3	Facade Maintenance System Sections and Details

STRUCTURAL DRAWINGS

S100b	Foundation and Basement Level Plan
S100c	Foundation and Basement Level Plan
S100d	Foundation and Basement Level Plan
S101b	Ground Level Plan
S101c	Ground Level Plan
S101d	Ground Level Plan
S102a	Second Level Plan
S102b	Second Level Plan
S102c	Second Level Plan
S102d	Second Level Plan
S102e	Second Level Plan
S103a	Museum Lower Level Plan
S103b	Museum Lower Level Plan
S103c	Third Level Plan
S104a	Museum Upper Level Plan
S104b	Museum Upper Level Plan
S105a	Executive Level Plan
S105b	Executive Level Plan
S106b	Executive Roof Plan
S106c	Roof Level Plan
S106d	Executive Roof Canopy Plan
S100a.1	Basement Level Partial Slab Plan****
S100b.1	Basement Level Partial Slab Plan****
S100c.1	Basement Level Partial Slab Plan **
S100d.1	Basement Level Partial Slab Plan****
S101b.1	Ground Level Partial Slab Plan **
S101c.1	Ground Level Partial Slab Plan *
S101d.1	Ground Level Partial Slab Plan***
S102a.1	Second Level Partial Slab Plan***
S102b.1	Second Level Partial Slab Plan ***
S102c.1	Second Level Partial Slab Plan****
S102d.1	Second Level Partial Slab Plan****
S103a.1	Museum Lower Level Partial Slab Plan ***
S103b.1	Museum Lower Level Partial Slab Plan *
S103d.1	Third Level Partial Slab Plan****
S104a.1	Museum Upper Level Partial Slab Plan****
S104b.1	Museum Upper Level Partial Slab Plan** *
S104d.1	Fourth Level Partial Slab Plan****
S105a.1	Executive Level Partial Slab Plan***
S105b.1	Executive Level Partial Slab Plan****
S106b.1	Roof Partial Slab Plan
	*****Issued originally as A700 drawings*
S110	Slab Reinforcement Ground and Second Level Plan
S111	Slab Reinforcement Museum Lower and Upper Level Plan
S112	Slab Reinforcement Executive Level and Executive Roof Roof
S200	Museum Building Truss Elevations
S201	Museum Building Truss Elevations
S205	East Wall Elevation
S210	Pier 4 Elevation
S215	Stair +2
S220	Wall Elevations Museum Building
S221	Wall Elevations Museum Building
S222	Wall Elevations Archive Building
S223	Wall Elevations Archive Building
S220.1	Stair 4 Shear Wall Elevations *(Issued originally as A710)*
S220.2	Stair 5 Shear Wall Elevations *(Issued originally as a711)*

PART TWO

MECHANICAL DRAWINGS

M000	HVAC Symbols & Abbreviations
M300b	Museum Basement Level Mechanical Partial Plan
M300c	Archives Basement Level Mechanical Partial Plan
M300d	Archive Basement Level Mechanical Partial Plan
M301b	Museum Ground Level Mechanical Partial Plan
M301c	Archives Ground Level Mechanical Partial Plan
M301d	Archives Ground Level Mechanical Partial Plan
M302a	Museum Second Level Mechanical Partial Plan
M302b	Museum Second Level Mechanical Partial Plan
M302c	Archives Roof/ Second Level Mechanical Partial Plan
M302d	Archives Roof/ Second Level Mechanical Partial Plan
M303a	Museum Lower Level Mechanical Partial Plan
M303b	Museum Lower Level Mechanical Partial Plan
M303d	Archives Third Level Mechanical Partial Plan
M304a	Museum Upper Level Mechanical Partial Plan
M304b	Museum Upper Level Mechanical Partial Plan
M304d	Archives Third Level Roof Mechanical Partial Plan
M305a	Museum Roof/Executive Level Mechanical Partial Plan
M305b	Museum Roof/Executive Level Mechanical Partial Plan
M400b	Museum Basement Level Mechanical Piping Partial Plan
M400c	Archives Basement Level Mechanical Piping Partial Plan
M400d	Archives Basement Level Mechanical Piping Partial Plan
M401b	Museum Ground Level Mechanical Piping Partial Plan
M401c	Archives Ground Level Mechanical Piping Partial Plan
M401d	Archives Ground Level Mechanical Piping Partial Plan
M402a	Museum Second Level Mechanical Piping Partial Plan
M402b	Museum Second Level Mechanical Piping Partial Plan
M402d	Archives Roof/Second Level Mechanical Piping Partial Plan
M403a	Museum Lower Level Mechanical Piping Partial Plan
M403b	Museum Lower Level Mechanical Piping Partial Plan
M403d	Archives Third Level Mechanical Piping Partial Plan
M404a	Museum Upper Level Mechanical Piping Partial Plan
M404b	Museum Upper Level Mechanical Piping Partial Plan
M405b	Museum Roof/Executive Level Mechanical Piping Partial Plan
M406a	Museum Lower Level Radiant Piping Partial Plan
M406b	Museum Lower Level Radiant Piping Partial Plan
M407a	Museum Upper Level Radiant Piping Partial Plan
M407b	Museum Upper Level Radiant Piping Partial Plan
M500	HVAC Air Riser Diagram No 1
M501	HVAC Air Riser Diagram No 2
M502	HVAC Water Riser Diagram No 1
M503	HVAC Water Riser Diagram
M504	HVAC Enlarged Plans and Sections
M505	HVAC Sections
M506	HVAC Sections
M507	Air Handling Unit Plans and Elevations
M600	HVAC Details Sheet One
M601	HVAC Details Sheet Two
M602	HVAC Details Sheet Three
M603	HVAC Details Sheet Four
M604	HVAC Details Sheet Five
M605	HVAC Details Sheet Six
M700	HVAC Schedules Sheet One
M701	HVAC Schedules Sheet Two
M702	HVAC Schedules Sheet Three
M703	HVAC Schedules Sheet Four

ELECTRICAL DRAWINGS

E001	Electrical Symbol List & Abbreviations
E100b	Basement Level Area B Power Plan
E100c	Basement Level Area C Power Plan
E100d	Basement Level Area D Power Plan
E101a	Ground Level Area A Power Plan
E101b	Ground Level Area B Power Plan
E101c	Ground Level Area C Power Plan
E101d	Ground Level Area D Power Plan
E102a	Second Level Area A Power Plan
E102b	Second Level Area B Power Plan
E102d	Second Level& Archive Roof Area D Power Plan
E103a	Museum Lower Level Area A Power Plan
E103b	Museum Lower Level Area B Power Plan
E103d	Museum Lower Level Area D Power Plan
E104a	Museum Upper Level Area A Power Plan
E104b	Museum Upper Level Area B Power Plan
E105b	Executive Level& Roof Area B Power Plan
E106a	Executive Level Roof Area A Power Plan
E106b	Roof Area B Power Plan
E106c	Roof Area C Power Plan
E106d	Roof Area D Power Plan
E200a	Basement Level Area A Lighting Plan
E200b	Basement Level Area B Lighting Plan
E200c	Basement Level Area C Lighting Plan
E200d	Basement Level Area D Lighting Plan
E201a	Ground Level Area A Lighting Plan
E201b	Ground Level Area B Lighting Plan
E201c	Ground Level Area C Lighting Plan
E201d	Ground Level Area D Lighting Plan
E202a	Second Level Area A Lighting Plan
E202b	Second Level Area B Lighting Plan
E202d	Second Level& Archive Roof Area D Lighting Plan
E203a	Museum Lower Level Area A Lighting Plan
E203b	Museum Lower Level Area B Lighting Plan
E203d	Third Level Area D Lighting Plan
E204a	Museum Upper Level Area A Lighting Plan
E204b	Museum Upper Level Area B Lighting Plan
E205b	Executive Level& Roof Area B Lighting Plan
E206a	Roof Area A Lighting Plan
E206b	Roof Area B Lighting Plan
E206c	Roof Area C Lighting Plan
E206d	Roof Area D Lighting Plan
E401	Kitchen Part Plans
E501	Electrical Panelboard Schedules
E502	Electrical Panelboard Schedules
E503	Electrical Panelboard Schedules
E504	Electrical Panelboard Schedules
E505	Electrical Panelboard Schedules
E506	Electrical Panelboard Schedules
E507	Electrical Panelboard Schedules
E508	Electrical Panelboard Schedules
E509	Electrical Panelboard Schedules
E510	Electrical Panelboard Schedules
E511	Electrical Panelboard Schedules
E512	Electrical Panelboard Schedules
E513	Electrical Panelboard Schedules
E514	Electrical Panelboard Schedules
FA001	Fire Alarm Project Notes
FA100b	Basement Level Area B Fire Alarm Plan
FA100c	Basement Level Area C Fire Alarm Plan
FA100d	Basement Level Area D Fire Alarm Plan
FA101b	Ground Level Area B Fire Alarm Plan
FA101c	Ground Level Area C Fire Alarm Plan
FA101d	Ground Level Area D Fire Alarm Plan
FA102a	Second Level Area A Fire Alarm Plan
FA102b	Second Level Area B Fire Alarm Plan
FA102d	Second Level& Archive Roof Area D Fire Alarm Plan
FA103a	Museum Lower Level Area A Fire Alarm Plan
FA103b	Museum Lower Level Area B Fire Alarm Plan
FA103d	Museum Lower Level Area D Fire Alarm Plan
FA104a	Museum Upper Level Area A Fire Alarm Plan
FA104b	Museum Upper Level Area B Fire Alarm Plan
FA105b	Executive Level& Roof Area B Fire Alarm Plan
FA500	Ground Level Document Storage Fire Alarm Plan
FA501	Ground Level Document Storage Fire Alarm Plan

PLUMBING DRAWINGS

P0001	Plumbing Notes
PF100b	Museum Basement Level Foundation Drain Partial Plan
PF100c	Archives Basement Level Foundation Drain Partial Plan
PF100d	Archives Basement Level Foundation Drain Partial Plan
P100b	Museum Basement Level Plumbing Partial Plan
P100c	Archives Basement Level Plumbing Partial Plan
P100d	Archives Basement Level Plumbing Partial Plan
P101b	Museum Ground Level Plumbing Partial Plan
P101c	Archives Ground Level Plumbing Partial Plan
P101d	Archives Ground Level Plumbing Partial Plan
P102a	Museum Second Level Plumbing Partial Plan
P102b	Museum Second Level Plumbing Partial Plan
P102c	Archives Roof/ Second Level Plumbing Partial Plan
P102d	Archives Roof/Second Level Plumbing Partial Plan
P103a	Museum Lower Level Plumbing Partial Plan
P103b	Museum Lower Level Plumbing Partial Plan
P103d	Archives Third Level Plumbing Partial Plan
P104a	Museum Upper Level Plumbing Partial Plan
P104b	Museum Upper Level Plumbing Partial Plan
P104d	Archives Third Level Roof Plumbing Partial Plan
P105a	Executive Level Plumbing Partial Plan
P105b	Executive Level Plumbing Partial Plan
P106b	Executive Level Plumbing Roof Plan
P201	Enlarged Basement Kitchen Plan
P202	Enlarged Museum Lower Level Kitchen Plan and Rough In Notes
P301	Plumbing Domestic Water & Gas Riser Diagrams
P302	Plumbing Sanitary Riser Diagram
P303	Archives Waste and Vent Riser Diagram
P401	Plumbing Details
P402	Plumbing Schedules

FIRE PROTECTION DRAWINGS

F001	Fire Protection Notes Details & Schedules
F100b	Museum Basement Level Fire Protection Partial Plan
F100c	Archives Basement Level Fire Protection Partial Plan
F100d	Archives Basement Level Fire Protection Partial Plan
F101b	Museum Ground Level Fire Protection Partial Plan
F101c	Archives Ground Level Fire Protection Partial Plan
F101d	Archives Ground Level Fire Protection Partial Plan
F102a	Museum Second Level Fire Protection Partial Plan
F102b	Museum Second Level Fire Protection Partial Plan
F102c	Archives Roof/Second Level Fire Protection Partial Plan
F102d	Archives Roof/Second Level Fire Protection Partial Plan
F103a	Museum Lower Level Fire Protection Partial Plan
F103b	Museum Lower Level Fire Protection Partial Plan
F103d	Archives Third Level Fire Protection Partial Plan
F104a	Museum Upper Level Fire Protection Partial Plan
F104b	Museum Upper Level Fire Protection Partial Plan
F105a	Museum Roof/Executive Level Fire Protection Partial Plan
F105b	Museum Roof/Executive Level Fire Protection Partial Plan

TELECOM DRAWINGS

T001	Telecom Legend & Symbols List
T300b	Basement Level Telecom Plan
T300c	Basement Level Tele Plan
T300d	Basement Level Tele Plan
T301b	Ground Level Telecom Plan
T301c	Ground Level Telecom Plan
T301d	Ground Level Telecom Plan
T302a	Second Level Telecom Plan
T302b	Second Level Telecom Plan
T302d	Second Level Telecom Plan
T303a	Museum Lower Level Telecom Plan
T303b	Museum Lower Level Telecom Plan
T303c	Museum Lower Level Telecom Plan
T304a	Museum Upper Level Telecom Plan
T304b	Museum Upper Level Telecom Plan
T305a	Executive Level Telecom Plan
T305b	Executive Level Telecom Plan
T400	Basement Closet Telecom Details
T401	Second & Executive Level Closets Telecom Details
T500	Telecom Backbone Pathways Riser Diagram
T501	Telecom Backbone Copper/Fiber Riser Diagram
T502	Telecom Grounding Riser Diagram
T600	Telecom Details Sheet 1 of 2
T600	Telecom Details Sheet 2 of 2

ACOUSTIC & AUDIOVISUAL DRAWINGS

AV-101	Great Hall Facility Plan
AV-101a	Great Hall Elevations and Sections
AV-102	Conference Room 2nd Level
AV-103	Overflow Connections at Orientation Theater Facility Plan
AV-104	Ground Level Divisible Classrooms
AV-200	Audiovisual Electrical Symbols & Notes
AV-201	Great Hall Audiovisual Electrical Plan
AV-201a	Cable/Conduit Riser Diagrams
AV-202	Conference Room 2nd Level Audiovisual Electrical Plan
AV-203	Overflow AV Connections at Orientation Theater Electrical Plan
AV-204	Ground Level Divisible Classrooms Audiovisual Electrical Plans

FOOD SERVICE DRAWINGS

FS 1	Food Service Lower Level Equipment Plan
FS 2	Food Service Ground Level Equipment Plan
FS-2.1	Food Service Equipment Schedule
FS SC1	Food Service Lower Level Special Conditions Plan
FS-SC2	Food Service Ground Level Special Conditions Plan
FS-M1	Food Service Mechanical Hood Plan
FS M2	Food Service Mechanical Hood Plan
FS P1	Food Service Lower Level Plumbing Rough In Plan
FS P2	Food Service Ground Level Plumbing Rough In Plan
FS-P2.1	Food Service Plumbing Schedule
FS E1	Food Service Lower Level Electrical Rough In Plan
FS E2	Food Service Ground Level Electrical Rough In Plan
FS E2.1	Food Service Electrical Schedule
FS-FA81	Food Service Custom Elevations and Details
FS-FA82	Food Service Custom Elevations and Details
FS FA83	Food Service Custom Elevations and Details

SECURITY DRAWINGS

SE 000	Security Legend
SE-001	Security Site Plan
SE 100b	Security Basement Level Partial Plan
SE-100c	Security Basement Level Partial Plan
SE-100d	Security Basement Level Partial Plan
SE 101b	Security Ground Level Partial Plan
SE 101c	Security Ground Level Partial Plan
SE-101d	Security Ground Level Partial Plan
SE 102a	Security Second Level Partial Plan
SE-102b	Security Second Level Partial Plan
SE-102d	Security Second Level Partial Plan
SE-103a	Security Museum Lower Level Partial Plan
SE-103b	Security Museum Lower Level Partial Plan
SE-103d	Security Third Level Plan
SE-104a	Security Museum Upper Level Partial Plan
SE-104b	Security Museum Upper Level Partial Plan
SE 105b	Security Executive Level Partial Plan
SE-106a	Security Roof Partial Plan
SE-106b	Security Roof Partial Plan
SE 106c	Security Roof Partial Plan
SE-106d	Security Roof Partial Plan
SE-200	Security ACS/IDS Riser
SE-201	Security ACS/IDS Riser
SE 202	ACS/IDS Riser
SE-203	Security CCTV Riser
SE-300	Security Details
SE-301	Security Details
SE-302	Security Details
SE-303	Security Details
SE-304	Security Details

WILLIAM J CLINTON PRESIDENTIAL CENTER

LITTLE ROCK, ARKANSAS

Architect

POLSHEK PARTNERSHIP LLP
320 West 13th Street
New York, New York 10014
212 807 7171

Coordinating Architects

POLK STANLEY YEARY ARCHITECTS Ltd
700 South Schiller Street
Little Rock Arkansas 72201
501 378.0878

WITSELL EVANS RASCO
901 West Third Street
Little Rock, Arkansas 72201
501 374 5300

WOODS CARADINE ARCHITECTS
2200 South Main Street
Little Rock, Arkansas 72206
501 374 4060

Landscape Architects

HARGREAVES ASSOCIATES
118 Magazine Street
Cambridge, Massachusettes 02139
617 661 0070

LANDSCAPE ARCHITECTURE, Inc.
2300 Cottondale Lane Suite 202
Little Rock, Arkansas 72202
501 374 5610

Structural Engineer

LESLIE E. ROBERTSON ASSOC , RLLP
30 Broad Street, 47th Floor
New York, New York 10004
212.750 9000

MEP Engineers

FLACK + KURTZ Inc.
475 Fifth Avenue
New York, New York 10017
212 532 9600

CROMWELL ARCHITECTS ENGINEERS
101 South Spring Street
Little Rock, Arkansas 72201
501 372.2900

Curtainwall Consultant

R. A. HEINTGES ARCHITECTS
126 Fifth Avenue 9th Floor
New York, New York 10011
212 652-2966

Seal

RICHARD OLCOTT REGISTERED ARCHITECT 3405 ARKANSAS

Issue	Date
100% Construction Documents	09/27/02
90% Progress Printing	08/30/02
100% Struct./ CD Progress	07/01/02
Bridge Bldg Substructure	06/14/02
100% Steel & Concrete CD & Architectural CD Progress	05/15/02
100% Design Development	03/01/02

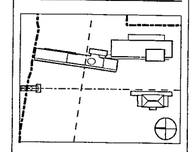

Job No 9908

Scale

Date September 27, 2002

Title DRAWING LIST

Sheet No A000

FOR OFFICIAL USE

ABBREVIATIONS

A/C	AIR CONDITIONING
ACOUST	ACOUSTICAL
ACT	ACOUSTICAL CEILING TILE
AD	AREA DRAIN
ADA	AMERICANS WITH DISABILITIES ACT
ADDL	ADDITIONAL
ADJ	ADJACENT
AFF	ABOVE FINISH FLOOR
AIA	AMERICAN INSTITUTE OF ARCHITECTS
ALT	ALTERNATE
ALUM	ALUMINUM
ANSI	AMERICAN NATIONAL STANDARDS INSTITUTE
APPROX	APPROXIMATE
ARCH	ARCHITECT
ASHRAE	THE AMERICAN SOCIETY OF HEATING REFRIGERATING AND AIR-CONDITIONING ENGINEERS
ASTM	AMERICAN SOCIETY FOR TESTING AND MATERIALS
BD	BOARD
BLDG	BUILDING
BLK	BLOCK
BLKG	BLOCKING
BM	BEAM
B O	BY OTHERS
B O C	BOTTOM OF CURB
B O F	BOTTOM OF FOOTING
BOCA	BUILDING OFFICIALS AND CODE ADMINISTRATORS INTERNATIONAL INC
B O S	BOTTOM OF SLAB
B O W	BOTTOM OF WALL
BOT	BOTTOM
BSMT	BASEMENT
BTWN	BETWEEN
CAB	CABINET
CADD	COMPUTER-AIDED DESIGN DRAFTING
CB	CATCH BASIN
CCTV	CLOSED-CIRCUIT TELEVISION
CLG	CEILING
CLG HT	CEILING HEIGHT
CLOS	CLOSET
CLR	CLEAR(ANCE)
CLS	CLOSURE
COMP	COMPRESSIVE
CMU	CONCRETE MASONRY UNIT
COL	COLUMN
CONC	CONCRETE (CAST IN PLACE)
CONST JT	CONSTRUCTION JOINT
CONT	CONTINUOUS OR CONTINUE
CONTR	CONTRACTOR
COORD	COORDINATE
CORR	CORRIDOR
CT	CERAMIC TILE
CTR	CENTER
D	DEEP/DEPTH
DB	DECIBEL(S)
DBL	DOUBLE
DDC	DIRECT DIGITAL CONTROL
DEG (o)	DEGREE
DEMO	DEMOLITION
DET	DETAIL
DIA (DIAM)	DIAMETER
DIF	DIFFUSER
DIM	DIMENSION
DN	DOWN
DR	DOOR
DV	DIVISION
DWG	DRAWING
DWR	DRAWER
EA.	EACH
EL	ELEVATION
ELEC	ELECTRIC(AL)
ELEV	ELEVATOR

ABBREVIATIONS

EMER	EMERGENCY
EPA	ENVIRONMENTAL PROTECTION AGENCY
EQ	EQUAL
EQUIP	EQUIPMENT
EXIST	EXISTING
EXP	EXPOSED
EXP JT	EXPANSION JOINT
EXT	EXTERIOR
FAI	FRESH AIR INTAKE
FD	FLOOR DRAINS
FIN	FINISH(ED)
FLR	FLOOR(ING)
FLUOR	FLUORESCENT
FO	FACE OF
FPSC	FIRE-PROOF SELF-CLOSING
FT ( )	FOOT
GA.	GAUGE
GALV	GALVANIZED
GFRG	GLASS FIBER REINFORCED GYPSUM
GL	GLASS GLAZING
GL BLK	GLASS BLOCK
GSF	GROSS SQUARE FEET
GWB	GYPSUM WALL BOARD
GYP	GYPSUM
H	HEIGHT
HC	HANDICAPPED
HDWR	HARDWARE
HM	HOLLOW METAL
HORIZ	HORIZONTAL
HP	HIGH POINT
HR	HOUR
HVAC	HEATING/VENTILATING/ AIR CONDITIONING
IN (")	INCH
INCL	INCLUDE (D) (ING)
INSUL	INSULATE (D) (TION)
INT	INTERIOR
INV	INVERT
JAN.	JANITOR
JT	JOINT(D)
LAM	LAMINATE
L E E D	LEADERSHIP IN ENERGY AND ENVIRONMENTAL DESIGN
LIN	LINEAR
LP	LOW POINT
LT	LIGHT
LT WT	LIGHTWEIGHT
LVL	LEVEL
MATL.	MATERIAL(S)
MAX	MAXIMUM
MECH	MECHANIC(AL)
MED	MEDIUM
MEP	MECHANICAL ELECTRICAL AND PLUMBING
MEZZ	MEZZANINE
MFR	MANUFACTURE(R)
MH	MANHOLE
MIN	MINIMUM/ MINUTE
MISC	MISCELLANEOUS
MO	MASONRY OPENING
MTL	METAL
MULL	MULLION
N.A.R.A.	NATIONAL ARCHIVES AND RECORDS ADMINISTRATION
N.F.P.A.	NATIONAL FIRE PROTECTION AGENCY
N.I.C	NOT IN CONTRACT
NO / #	NUMBER
NOM	NOMINAL
N S F	NET SQUARE FEET
NTS	NOT TO SCALE

ABBREVIATIONS

O C	ON CENTER
O D	OUTSIDE DIAMETER
OFF	OFFICE
OH	OVERHEAD
OPG	OPENING
OPP	OPPOSITE
OSHA	OCCUPATIONAL SAFETY AND HEALTH ADMINISTRATION
P LAM	PLASTIC LAMINATE
P E	PASSENGER ELEVATOR
PERF	PERFORATE(D)
PL	PLATE
P L	PROPERTY LINE
PLAS	PLASTER
PLF	POUNDS PER LINEAR FOOT
PLMB	PLUMBING
PNL	PANEL
PSF	POUNDS PER SQUARE FOOT
PSI	POUNDS PER SQUARE INCH
PT	POINT
PNT	PAINT
PTD	PAINT(ED)
PLYWD	PLYWOOD
QT	QUARRY TILE
RAD	RADIUS
RD	ROOF DRAIN
REF	REFERENCE
REINF	REINFORCE(D)
REV	REVISION(S)
RFI	REQUEST FOR INFORMATION
RFP	REQUEST FOR PROPOSAL
RM	ROOM
S C I F	SECURE AND CONFIDENTIAL INFORMATION FACILITY
S E	SERVICE ELEVATOR
ST STL	STAINLESS STEEL
SF	SQUARE FEET
SIM	SIMILAR
SMACNA	SHEET METAL AND AIR CONDITIONING CONTRACTORS NATIONAL ASSOCIATION
SPEC	SPECIFICATION(S)
SQ	SQUARE
STC	SOUND TRANSMISSION COEFFICIENT
STD	STANDARD
STL	STEEL
STOR	STORAGE
STRUCT	STRUCTURE/STRUCTURAL
SUSP	SUSPENDED
T	TREAD
TD	TRENCH DRAIN
T O S	TOP OF SLAB
T O STL	TOP OF STEEL
T O W	TOP OF WALL
T&G	TONGUE AND GROOVE
TEL	TELEPHONE
TEMP	TEMPERED
TERR	TERRACE
THK	THICK(NESS)
TO	TOP OF
T O C	TOP OF CURB
TV	TELEVISION
TYP	TYPICAL
UL	UNDERWRITERS LABORATORY
U O I	UNLESS OTHERWISE INDICATED
U O N	UNLESS OTHERWISE NOTED
UV	ULTRAVIOLET
VAV	VARIABLE AIR VOLUME
VCT	VINYL COMPOSITION TILE
VERT	VERTICAL
VEST	VESTIBULE
VFY	VREIFY
V I F	VERIFY IN FIELD
W/ W/O	WITH WITHOUT
WD	WOOD
WT	WEIGHT

MATERIAL SYMBOLS

- METAL PANEL
- ALUMINUM
- STEEL STAINLESS STEEL
- PLYWOOD
- PLYWOOD
- STONE
- BATT INSULATION ACOUSTIC INSULATION
- FINISHED WOOD
- BLOCKING
- SHIM
- CONCRETE ARCHITECTURAL CONCRETE
- MORTAR/GROUT
- CONCRETE MASONRY UNIT
- COMPRESSIBLE FILLER RIGID INSULATION
- EARTH FILL
- GRANULAR MATERIAL
- SEALANT & BACKER ROD
- BRICK
- PRECAST

DRAWING SYMBOLS

- BLDG 17 T O ROOF EL 160'-3" — ELEVATION IN SECTION
- EL 65'-0" — ELEVATION IN PLAN
- N / 3 — COLUMN GRIDS
- CENTER LINE
- CUT LINE
- LINE ABOVE OR BELOW PLAN (SOFFITS ETC)
- 3 / A202 — DETAIL NUMBER / SHEET NUMBER — ELEVATION SYMBOL
- 11 / A202 — DETAIL NUMBER
- 41 / A202 / 21 / 31 — SHEET NUMBER — INTERIOR ELEVATION SYMBOL
- 5 / A202 — DETAIL NUMBER / SHEET NUMBER — SECTION SYMBOL
- 11 — PARTITION TYPE IDENTIFICATION
- 16 / A504 — DETAIL NUMBER / SHEET NUMBER — ENLARGED DETAIL SYMBOL
- 1 / 2 — DOOR REFERENCE NUMBER
- 1 29A — FIRE SHUTTER REFERENCE NUMBER
- HR- 1 — HANDRAIL TYPE REFERENCE NUMBER

RCP DEVICE KEY

	FLOOR/CEILING OUTLET
	SPEAKER/STROBE
	GLASS BREAK DETECTOR
	CEIL MTD MOTION DETECTOR
	WALL MTD MOTION DETECTOR
	CEIL MTD SECURITY SPEAKER
	WALL MTD SECURITY SPEAKER
	CEIL MTD AV SPEAKER
	WALL MTD AV SPEAKER
	SECURITY CAMERA
	CLG MTD SMOKE/HEAT DETECTOR
	CLG MTD EXIT
	WALL MTD EXIT
	CLG MTD SPRINKLER HEAD
	WALL MTD SPRINKLER HEAD
	RETURN OUTLET CLG DIFFUSER
	SUPPLY OUTLET CLG DIFFUSER
LD	LINEAR SUPPLY DIFFUSER
	WIRELESS ALARM ANTENNA/ TRANSMITTER
	TELEVISION OUTLET

WILLIAM J CLINTON PRESIDENTIAL CENTER

LITTLE ROCK, ARKANSAS

Architect

POLSHEK PARTNERSHIP LLP
320 West 13th Street
New York, New York 10014
212 807 7171

Coordinating Architects

POLK STANLEY YEARY ARCHITECTS Ltd
700 South Schiller Street
Little Rock, Arkansas 72201
501 378 0878

WITSELL EVANS RASCO
901 West Third Street
Little Rock, Arkansas 72201
501 374 5300

WOODS CARADINE ARCHITECTS
2200 South Main Street
Little Rock, Arkansas 72206
501 374.4060

Landscape Architects

HARGREAVES ASSOCIATES
118 Magazine Street
Cambridge Massachusettes 02139
617 661 0070

LANDSCAPE ARCHITECTURE, Inc.
2300 Cottondale Lane Suite 202
Little Rock, Arkansas 72202
501 374 5810

Structural Engineer

LESLIE E ROBERTSON ASSOC , RLLP
30 Broad Street, 47th Floor
New York, New York 10004
212.750 9000

MEP Engineers

FLACK + KURTZ Inc.
475 Fifth Avenue
New York, New York 10017
212 532.9600

CROMWELL ARCHITECTS ENGINEERS
101 South Spring Street
Little Rock Arkansas 72201
501 372.2900

Curtainwall Consultant

R. A. HEINTGES ARCHITECTS
126 Fifth Avenue, 9th Floor
New York, New York 10011
212 652-2966

Seal

RICHARD OLCOTT REGISTERED ARCHITECT 3405 ARKANSAS

Issue	Date
100% Construction Documents	09/27/02
90% Progress Printing	08/30/02
100% Struct./ CD Progress	07/01/02
Bridge Bldg Substructure	06/14/02
100% Steel & Concrete CD & Architectural CD Progress	05/15/02
100% Design Development	03/01/02

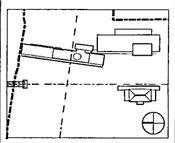

Job No 9908

Scale

Date September 27, 2002

Title

ABBREVIATIONS AND SYMBOLS

Sheet No

A001

FOR OFFICIAL USE ONLY

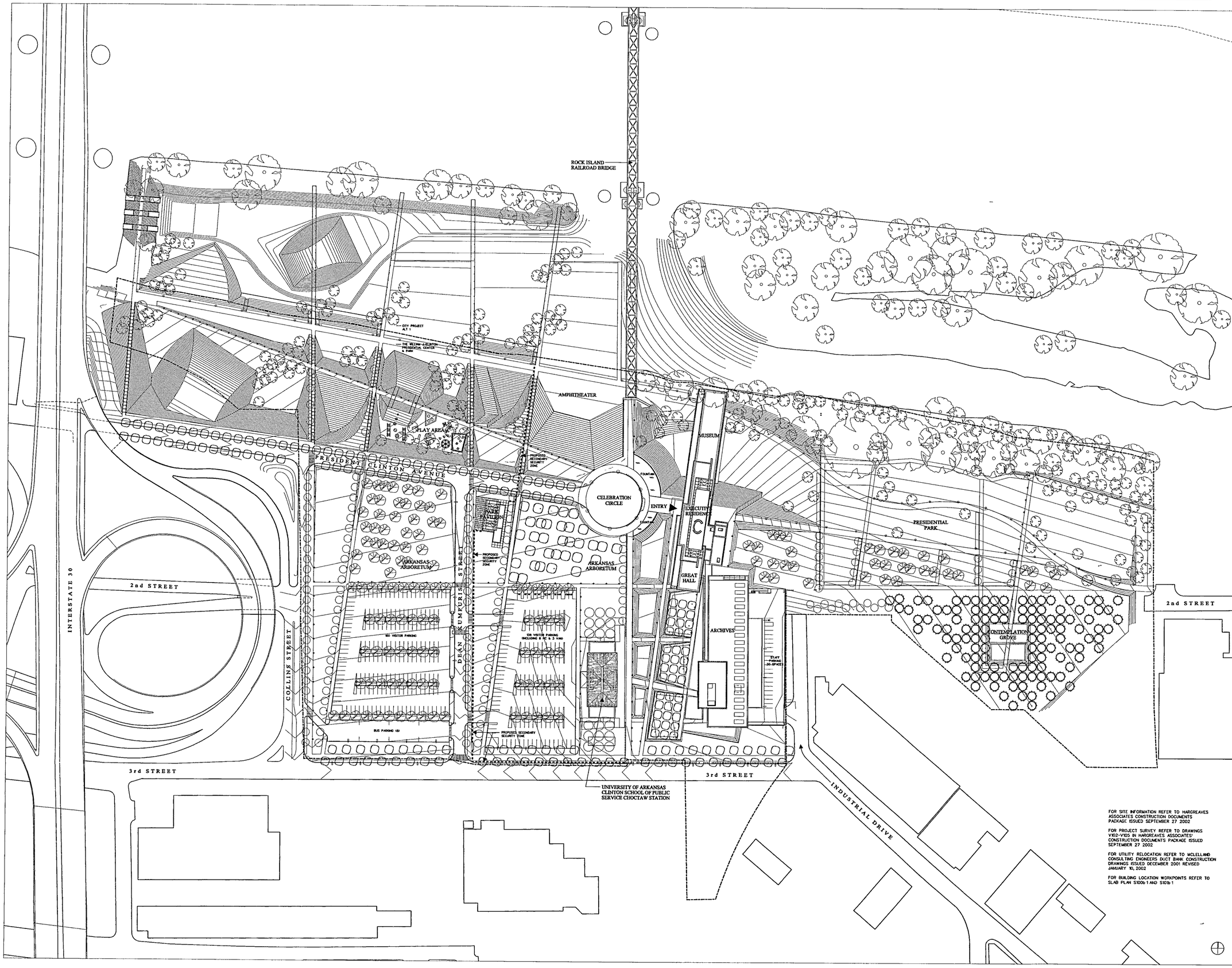

FOR SITE INFORMATION REFER TO HARGREAVES ASSOCIATES CONSTRUCTION DOCUMENTS PACKAGE ISSUED SEPTEMBER 27 2002

FOR PROJECT SURVEY REFER TO DRAWINGS V102-V103 IN HARGREAVES ASSOCIATES' CONSTRUCTION DOCUMENTS PACKAGE ISSUED SEPTEMBER 27 2002

FOR UTILITY RELOCATION REFER TO MCLELLAND CONSULTING ENGINEERS DUCT BANK CONSTRUCTION DRAWINGS ISSUED DECEMBER 2001 REVISED JANUARY 10, 2002

FOR BUILDING LOCATION WORKPOINTS REFER TO SLAB PLAN S100b-1 AND S101b-1

WILLIAM J CLINTON PRESIDENTIAL CENTER

LITTLE ROCK, ARKANSAS

Architect

POLSHEK PARTNERSHIP LLP
320 West 13th Street
New York, New York 10014
212 807 7171

Coordinating Architects

POLK STANLEY YEARY ARCHITECTS Ltd
700 South Schiller Street
Little Rock, Arkansas 72201
501 378 0678

WITSELL EVANS RASCO
901 West Third Street
Little Rock Arkansas 72201
501 374 5300

WOODS CARADINE ARCHITECTS
2200 South Main Street
Little Rock, Arkansas 72206
501 374 4060

Landscape Architects

HARGREAVES ASSOCIATES
118 Magazine Street
Cambridge Massachusettes 02139
617 661 0070

LANDSCAPE ARCHITECTURE Inc.
2300 Cottondale Lane Suite 202
Little Rock Arkansas 72202
501 374 5610

Structural Engineer

LESLIE E. ROBERTSON ASSOC RLLP
30 Broad Street, 47th Floor
New York, New York 10004
212.750 9000

MEP Engineers

FLACK + KURTZ Inc.
475 Fifth Avenue
New York, New York 10017
212 532.9600

CROMWELL ARCHITECTS ENGINEERS
101 South Spring Street
Little Rock, Arkansas 72201
501 372 2900

Curtainwall Consultant

R. A. HEINTGES ARCHITECTS
126 Fifth Avenue, 9th Floor
New York New York 10011
212 652-2966

Seal

RICHARD OLSEN REGISTERED ARCHITECT 3405 ARKANSAS

Issue	Date
100% Construction Documents	09/27/02
90% Progress Printing	08/30/02
100% Struct./ CD Progress	07/01/02
Bridge Bldg Substructure	06/14/02
100% Steel & Concrete CD & Architectural CD Progress	05/15/02
100% Design Development	03/01/02

Job No 9908

Scale 1 80

Date September 27 2002

Title SITE PLAN

Sheet No A002

FOR OFFICIAL USE ONLY

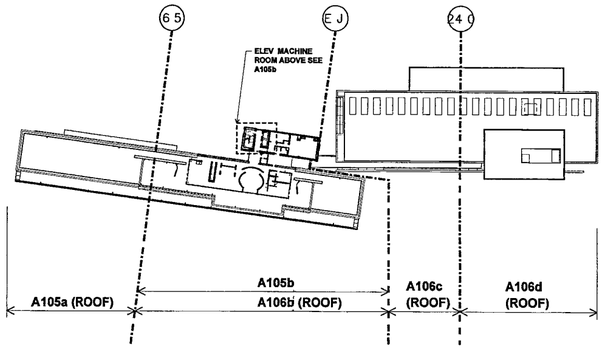

EXECUTIVE LEVEL PLAN

SCALE 1 70 — FOR INFORMATION ONLY — 32

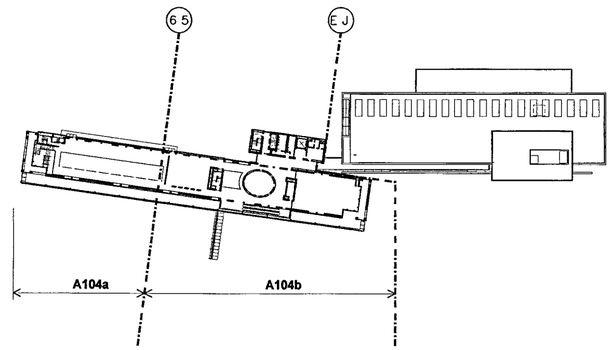

MUSEUM UPPER-LEVEL PLAN

SCALE 1 70 — FOR INFORMATION ONLY — 31

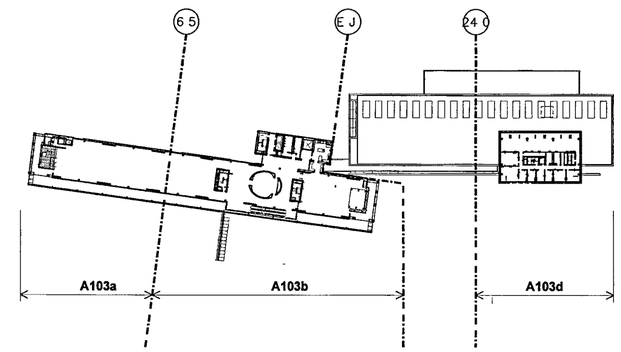

MUSEUM LOWER-LEVEL PLAN

SCALE 1 70 — FOR INFORMATION ONLY — 30

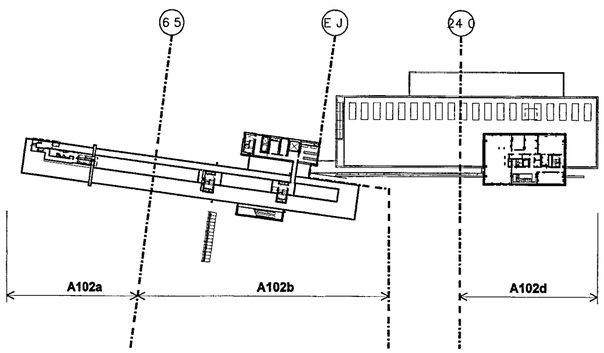

SECOND LEVEL PLAN

SCALE 1 70 — FOR INFORMATION ONLY — 22

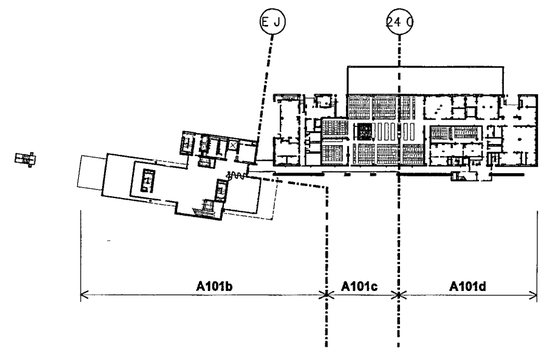

GROUND LEVEL PLAN

SCALE 1 70 — FOR INFORMATION ONLY — 21

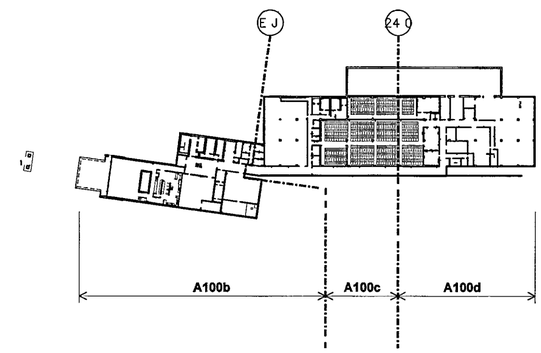

BASEMENT LEVEL PLAN

SCALE 1 70 — FOR INFORMATION ONLY — 20

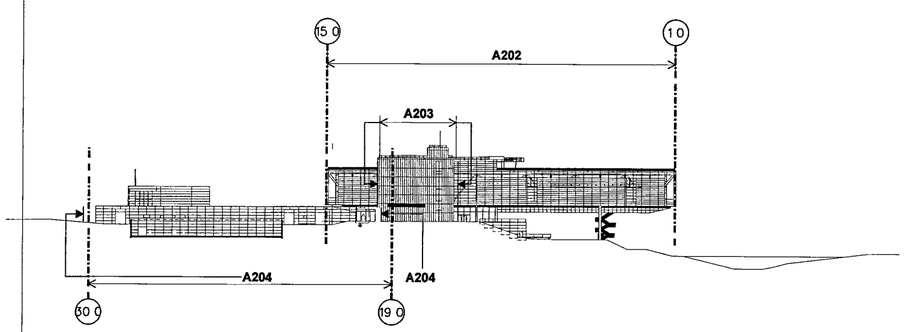

EAST ELEVATION

SCALE 1 70 — FOR INFORMATION ONLY — 11

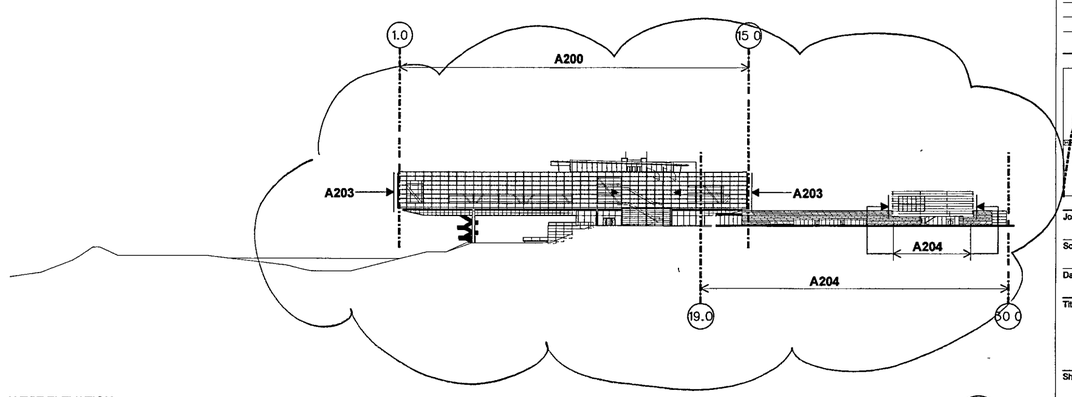

WEST ELEVATION

SCALE 1 70 — FOR INFORMATION ONLY — 10

WILLIAM J CLINTON PRESIDENTIAL CENTER

LITTLE ROCK, ARKANSAS

Architect

POLSHEK PARTNERSHIP LLP
320 West 13th Street
New York, New York 10014
212 807 7171

Coordinating Architects

POLK STANLEY YEARY ARCHITECTS Ltd
700 South Schiller Street
Little Rock, Arkansas 72201
501 378 0878

WITSELL EVANS RASCO
901 West Third Street
Little Rock, Arkansas 72201
501 374.5300

WOODS CARADINE ARCHITECTS
2200 South Main Street
Little Rock, Arkansas 72206
501 374 4060

Landscape Architects

HARGREAVES ASSOCIATES
118 Magazine Street
Cambridge Massachusettes 02139
617 661 0070

LANDSCAPE ARCHITECTURE Inc.
2300 Cottondale Lane Suite 202
Little Rock Arkansas 72202
501 374 5610

Structural Engineer

LESLIE E ROBERTSON ASSOC RLLP
30 Broad Street, 47th Floor
New York New York 10004
212 750 9000

MEP Engineers

FLACK + KURTZ Inc.
475 Fifth Avenue
New York New York 10017
212 532 9600

CROMWELL ARCHITECTS ENGINEERS
101 South Spring Street
Little Rock, Arkansas 72201
501 372.2900

Curtainwall Consultant

R A. HEINTGES ARCHITECTS
125 Fifth Avenue, 9th Floor
New York, New York 10011
212 652-2966

Seal

Issue	Date
100% Construction Documents	09/27/02
90% Progress Printing	08/30/02
100% Struct / CD Progress	07/01/02
100% Steel & Concrete CD & Architectural CD Progress	05/15/02
100% Design Development	03/01/02

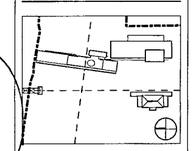

Job No 9908

Scale AS NOTED

Date September 27, 2002

Title KEY PLANS

Sheet No A003

FOR OFFICIAL USE ONLY

BASEMENT FLOOR PLAN B

SCALE 1/8" = 1'-0"

AFP-00B DGN

10

WILLIAM J CLINTON PRESIDENTIAL CENTER

LITTLE ROCK, ARKANSAS

Architect

POLSHEK PARTNERSHIP LLP
320 West 13th Street
New York, New York 10014
212.807 7171

Coordinating Architects

POLK STANLEY YEARY ARCHITECTS Ltd
700 South Schiller Street
Little Rock, Arkansas 72201
501.378.0878

WITSELL EVANS RASCO
901 West Third Street
Little Rock, Arkansas 72201
501 374 5300

WOODS CARADINE ARCHITECTS
2200 South Main Street
Little Rock, Arkansas 72206
501.374.4060

Landscape Architects

HARGREAVES ASSOCIATES
118 Magazine Street
Cambridge Massachusettes 02139
617.661 0070

LANDSCAPE ARCHITECTURE, Inc.
2300 Cottondale Lane Suite 202
Little Rock, Arkansas 72202
501.374 5810

Structural Engineer

LESLIE E. ROBERTSON ASSOC RLLP
30 Broad Street, 47th Floor
New York, New York 10004
212.750 9000

MEP Engineers

FLACK + KURTZ Inc.
475 Fifth Avenue
New York, New York 10017
212.532.9600

CROMWELL ARCHITECTS ENGINEERS
101 South Spring Street
Little Rock, Arkansas 72201
501.372.2900

Curtainwall Consultant

R. A. HEINTGES ARCHITECTS
126 Fifth Avenue, 9th Floor
New York, New York 10011
212.652-2966

Seal

RICHARD OLCAY MATTEROLO ARCHITECT 3405 ARKANSAS

Issue	Date
100% Construction Documents	09/27/02
90% Progress Printing	08/30/02
100% Struct./ CD Progress	07/01/02
Bridge Bldg Substructure	06/14/02
100% Steel & Concrete CD & Architectural CD Progress	05/15/02
100% Design Development	03/01/02

Job No 9908

Scale 1/8" = 1'-0"

Date September 27, 2002

Title

BASEMENT LEVEL PARTIAL PLAN

Sheet No

A100b

FOR OFFICIAL USE ONLY

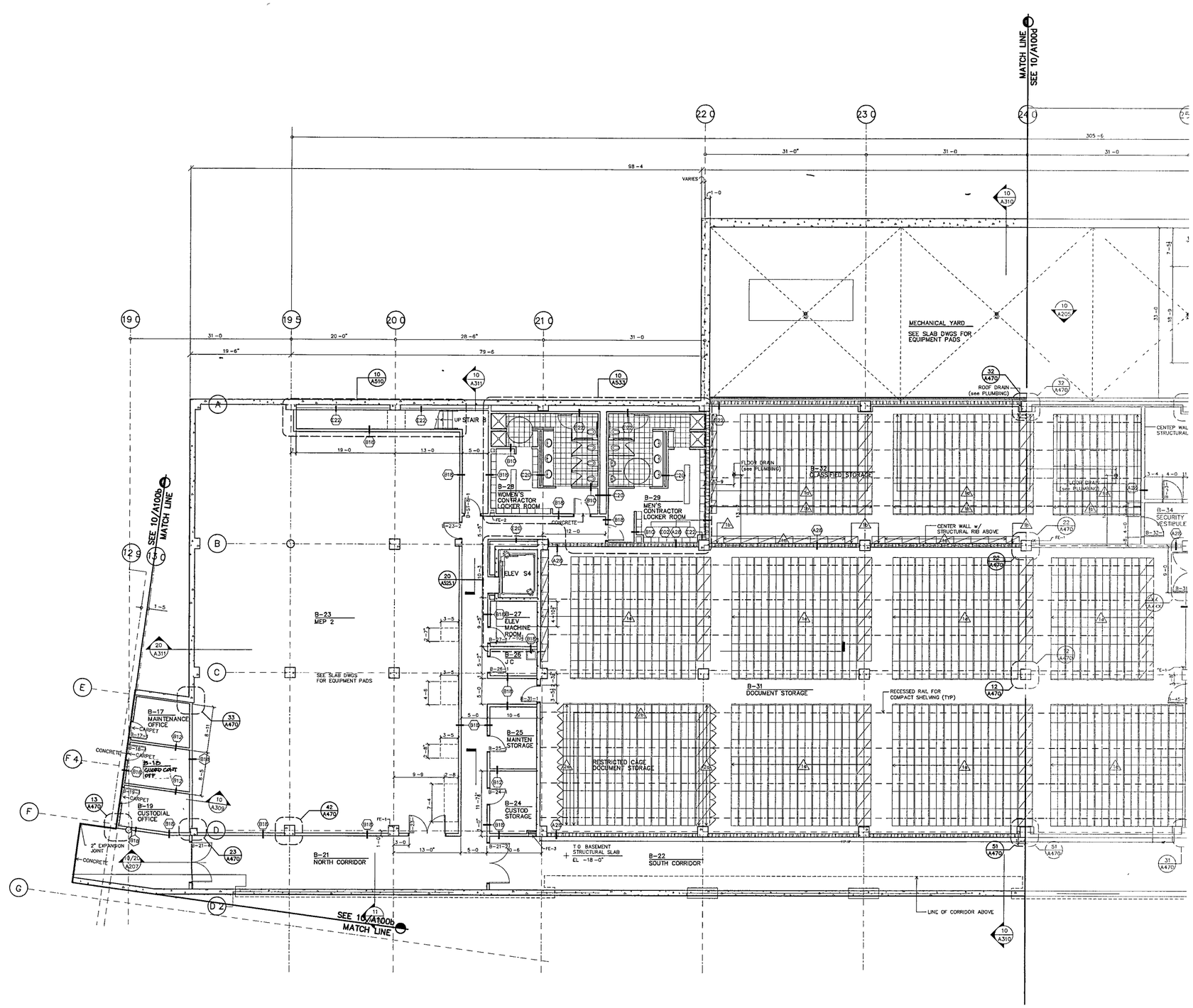

BASEMENT FLOOR PLAN C

SCALE 1/8" = 1'-0"

AFP-00B dwg 10

WILLIAM J CLINTON PRESIDENTIAL CENTER

LITTLE ROCK, ARKANSAS

Architect

POLSHEK PARTNERSHIP LLP
320 West 13th Street
New York, New York 10014
212 807 7171

Coordinating Architects

POLK STANLEY YEARY ARCHITECTS Ltd
700 South Schiller Street
Little Rock Arkansas 72201
501 378 0878

WITSELL EVANS RASCO
901 West Third Street
Little Rock, Arkansas 72201
501 374 5300

WOODS CARADINE ARCHITECTS
2200 South Main Street
Little Rock, Arkansas 72206
501 374 4060

Landscape Architects

HARGREAVES ASSOCIATES
118 Magazine Street
Cambridge Massachusettes 02139
617 661 0070

LANDSCAPE ARCHITECTURE Inc
2300 Cottondale Lane Suite 202
Little Rock Arkansas 72202
501 374 5610

Structural Engineer

LESLIE E ROBERTSON ASSOC RLLP
30 Broad Street, 47th Floor
New York New York 10004
212 750 9000

MEP Engineers

FLACK + KURTZ Inc
475 Fifth Avenue
New York New York 10017
212 532 9600

CROMWELL ARCHITECTS ENGINEERS
101 South Spring Street
Little Rock, Arkansas 72201
501 372 2900

Curtainwall Consultant

R A. HEINTGES ARCHITECTS
126 Fifth Avenue, 9th Floor
New York New York 10011
212 652 2966

Seal

WITSELL EVANS & RASCO PA
REGISTERED ARCHITECTS
NO C-44
ARKANSAS

Issue	Date
100% Construction Documents	09/27/02
90% Progress Printing	08/30/02
100% Struct./CD Progress	07/01/02
Bridge Bldg Substructure	06/14/02
100% Steel & Concrete CD	05/15/02
& Architectural CD Progress	
100% Design Development	03/01/02

Job No 9908

Scale 1/8" = 1'-0"

Date September 27 2002

Title

BASEMENT LEVEL PARTIAL PLAN

Sheet No A100c

FOR OFFICIAL USE ONLY

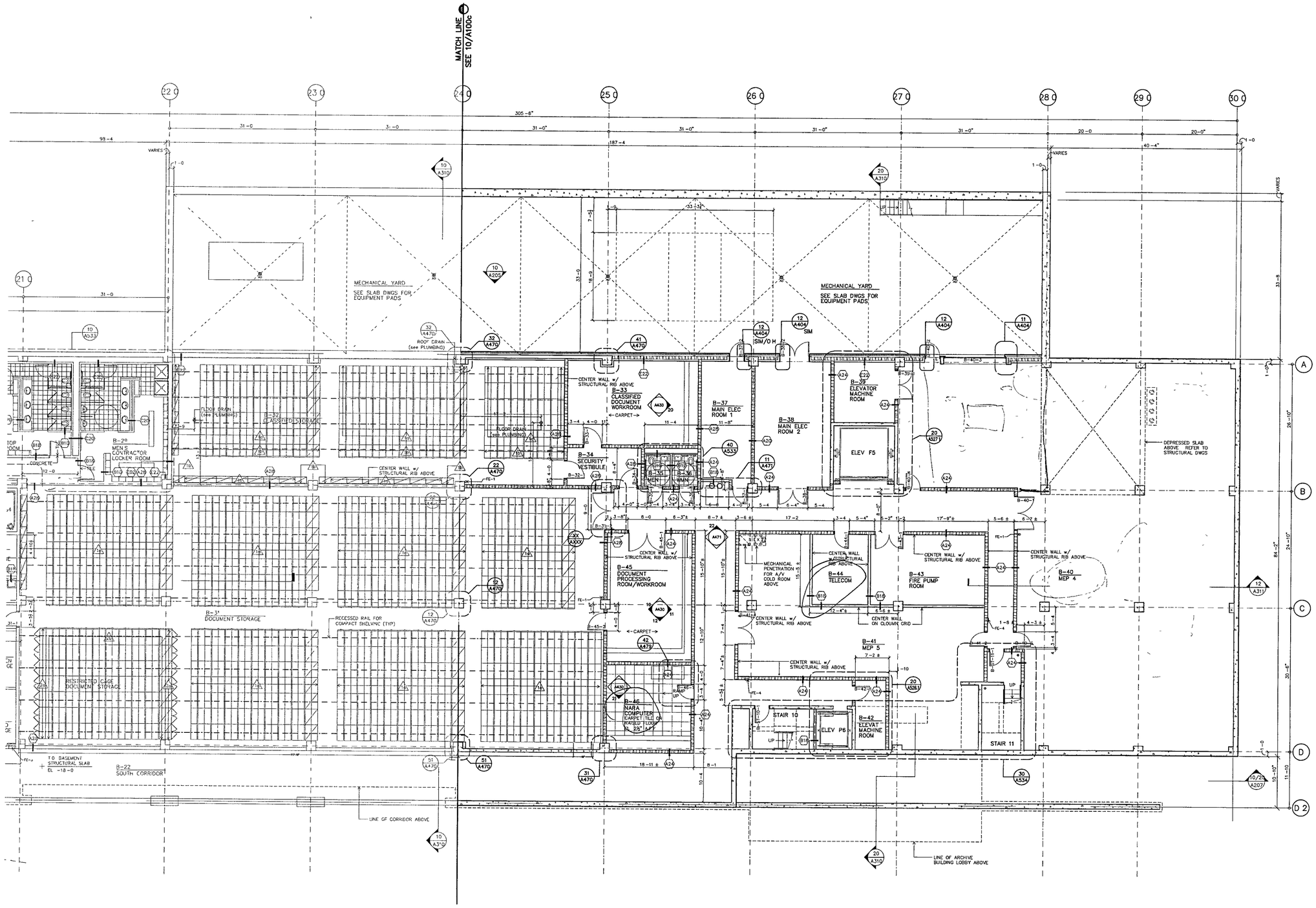

BASEMENT FLOOR PLAN D

SCALE 1/8" = 1'-0"

AFP-008 DWG 10

WILLIAM J CLINTON PRESIDENTIAL CENTER

LITTLE ROCK ARKANSAS

Architect

POLSHEK PARTNERSHIP LLP
320 West 13th Street
New York, New York 10014
212 807 7171

Coordinating Architects

POLK STANLEY YEARY ARCHITECTS Ltd
700 South Schiller Street
Little Rock Arkansas 72201
501 378 0878

WITSELL EVANS RASCO
901 West Third Street
Little Rock Arkansas 72201
501 374 5300

WOODS CARADINE ARCHITECTS
2200 South Main Street
Little Rock, Arkansas 72206
501 374 4060

Landscape Architects

HARGREAVES ASSOCIATES
118 Magazine Street
Cambridge Massachusettes 02139
617 661 0070

LANDSCAPE ARCHITECTURE Inc
2300 Cottondale Lane Suite 202
Little Rock, Arkansas 72202
501 374 5610

Structural Engineer

LESLIE E ROBERTSON ASSOC , RLLP
30 Broad Street 47th Floor
New York, New York 10004
212 750 9000

MEP Engineers

FLACK + KURTZ Inc
475 Fifth Avenue
New York, New York 10017
212 532 9600

CROMWELL ARCHITECTS ENGINEERS
101 South Spring Street
Little Rock, Arkansas 72201
501 372 2900

Curtainwall Consultant

R. A. HEINTGES ARCHITECTS
126 Fifth Avenue, 9th Floor
New York, New York 10011
212.652 2966

Seal

WITSELL EVANS & RASCO, P.A. REGISTERED ARCHITECTS NO C-44 ARKANSAS

Issue	Date
100% Construction Documents	09/27/02
90% Progress Printing	08/30/02
100% Struct./CD Progress	07/01/02
Bridge Bldg Substructure	06/14/02
100% Steel & Concrete CD	05/15/02
& Architectural CD Progress	
100% Design Development	03/01/02

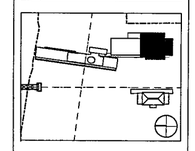

Job No 9906

Scale 1/8" = 1'-0"

Date September 27, 2002

Title

BASEMENT LEVEL PARTIAL PLAN

Sheet No

A100d

FOR OFFICIAL USE ONLY

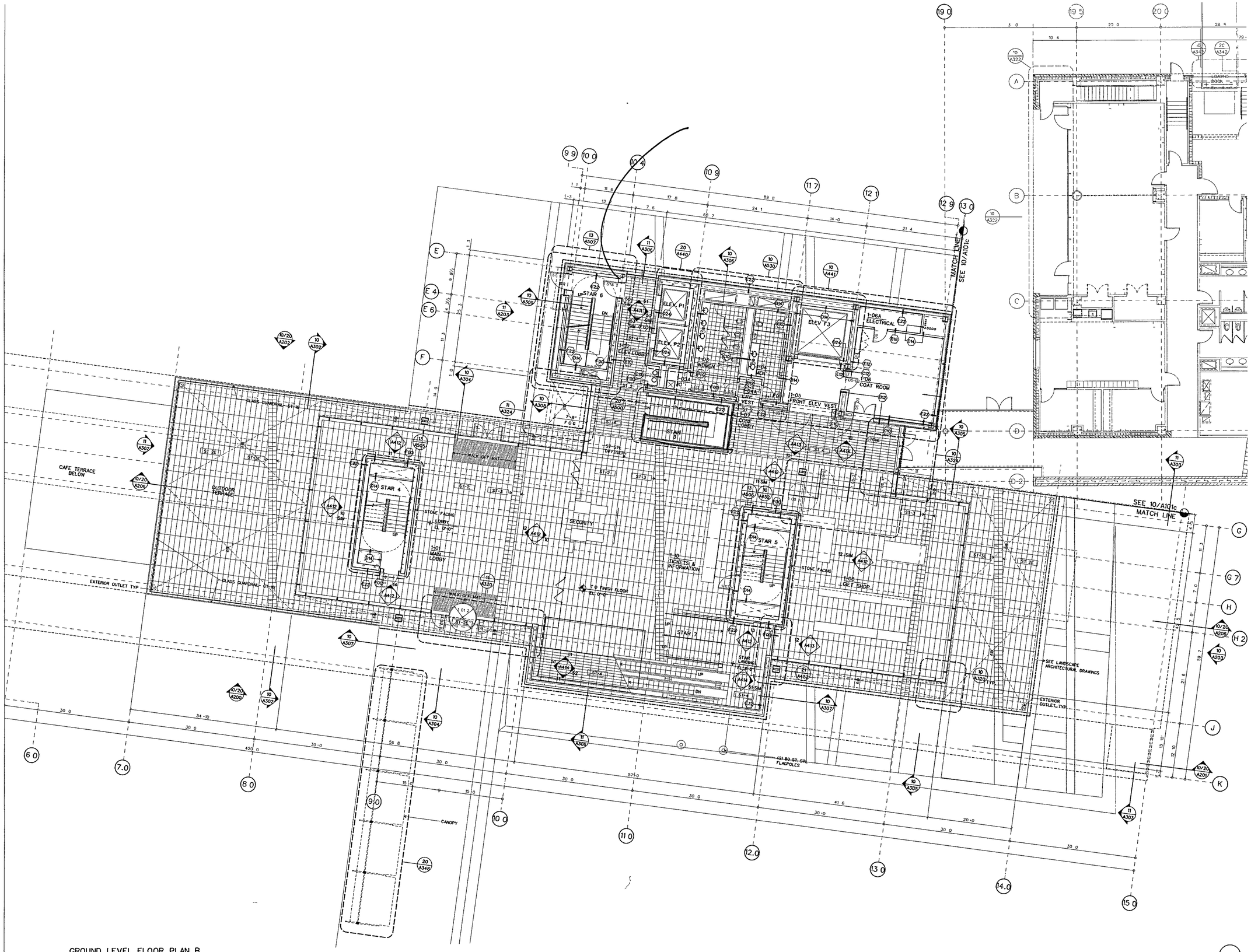

GROUND LEVEL FLOOR PLAN B

SCALE 1/8" = 1'-0"

AFP-01.DGN

10

FOR OFFICIAL USE ONLY

WILLIAM J CLINTON PRESIDENTIAL CENTER

LITTLE ROCK, ARKANSAS

Architect

POLSHEK PARTNERSHIP LLP
320 West 13th Street
New York, New York 10014
212 807 7171

Coordinating Architects

POLK STANLEY YEARY ARCHITECTS Ltd
700 South Schiller Street
Little Rock, Arkansas 72201
501 378 0878

WITSELL EVANS RASCO
901 West Third Street
Little Rock, Arkansas 72201
501 374 5300

WOODS CARADINE ARCHITECTS
2200 South Main Street
Little Rock, Arkansas 72206
501 374 4060

Landscape Architects

HARGREAVES ASSOCIATES
118 Magazine Street
Cambridge Massachusettes 02139
617 661 0070

LANDSCAPE ARCHITECTURE, Inc.
2300 Cottondale Lane Suite 202
Little Rock, Arkansas 72202
501 374 5610

Structural Engineer

LESLIE E ROBERTSON ASSOC RLLP
30 Broad Street, 47th Floor
New York New York 10004
212.750 9000

MEP Engineers

FLACK + KURTZ Inc.
475 Fifth Avenue
New York, New York 10017
212 532 9600

CROMWELL ARCHITECTS ENGINEERS
101 South Spring Street
Little Rock, Arkansas 72201
501 372 2900

Curtainwall Consultant

R A. HEINTGES ARCHITECTS
128 Fifth Avenue 9th Floor
New York, New York 10011
212 652-2966

Seal

Issue	Date
100% Construction Documents	09/27/02
90% Progress Printing	08/30/02
100% Struct./ CD Progress	07/01/02
Bridge Bldg Substructure	06/14/02
100% Steel & Concrete CD	05/15/02
& Architectural CD Progress	
100% Design Development	03/01/02

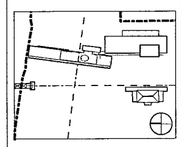

Job No 9908

Scale 1/8" = 1'-0"

Date September 27, 2002

Title

GROUND LEVEL PARTIAL PLAN

Sheet No

A101b

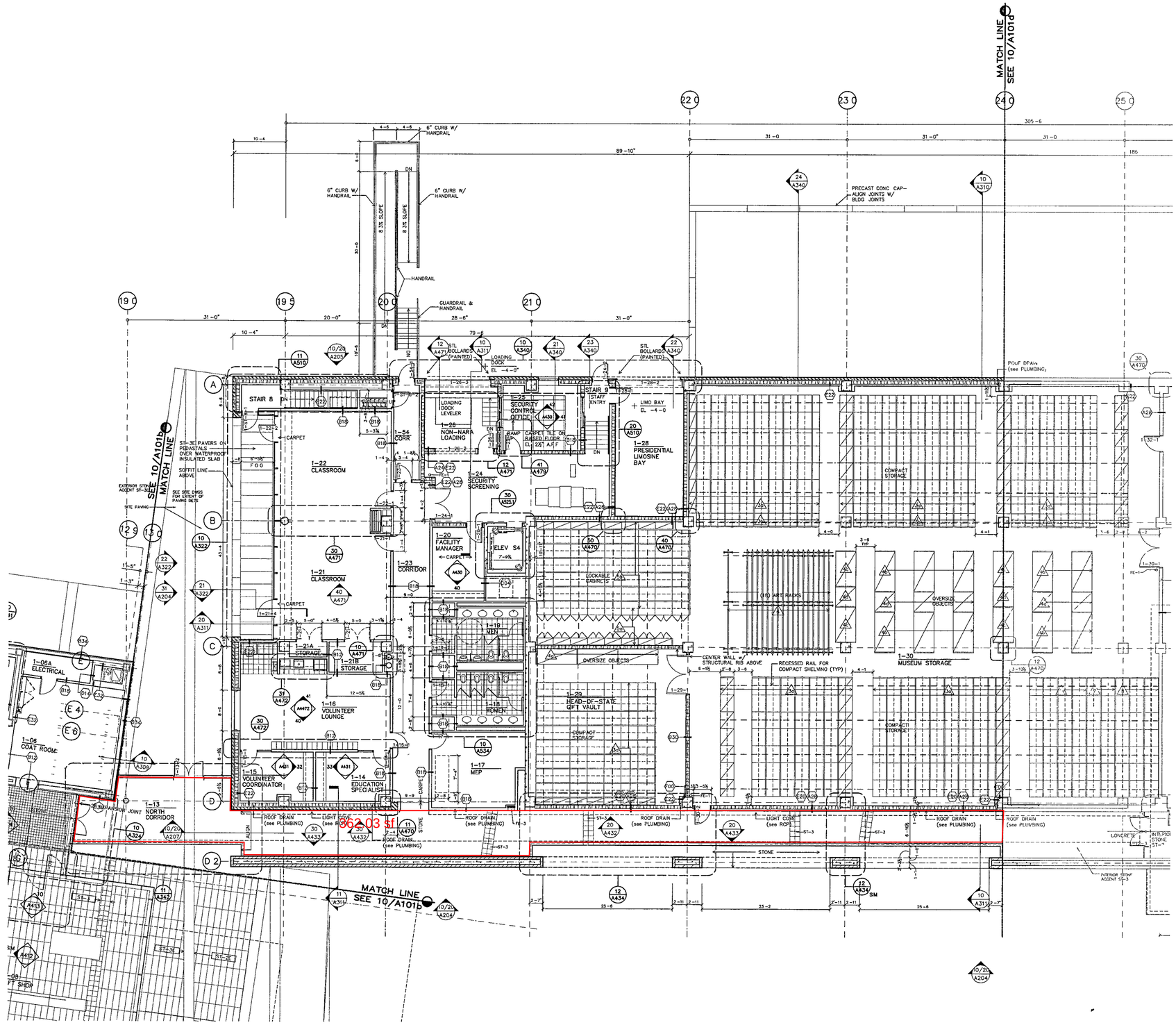

GROUND FLOOR PLAN C

SCALE 1/8" = 1'-0"

AFP-01 dwg

10

WILLIAM J CLINTON PRESIDENTIAL CENTER

LITTLE ROCK ARKANSAS

Architect

POLSHEK PARTNERSHIP LLP
320 West 13th Street
New York New York 10014
212 807 7171

Coordinating Architects

POLK STANLEY YEARY ARCHITECTS Ltd
700 South Schiller Street
Little Rock, Arkansas 72201
501 378 0878

WITSELL EVANS RASCO
901 West Third Street
Little Rock, Arkansas 72201
501 374 5300

WOODS CARADINE ARCHITECTS
2200 South Main Street
Little Rock, Arkansas 72206
501 374 4060

Landscape Architects

HARGREAVES ASSOCIATES
118 Magazine Street
Cambridge Massachusetts 02139
617 661 0070

LANDSCAPE ARCHITECTURE, Inc.
2300 Cottondale Lane Suite 202
Little Rock, Arkansas 72202
501 374 5610

Structural Engineer

LESLIE E ROBERTSON ASSOC , RLLP
30 Broad Street, 47th Floor
New York, New York 10004
212 750 9000

MEP Engineers

FLACK + KURTZ Inc.
475 Fifth Avenue
New York, New York 10017
212 532 9600

CROMWELL ARCHITECTS ENGINEERS
101 South Spring Street
Little Rock, Arkansas 72201
501 372 2900

Curtainwall Consultant

R A. HEINTGES ARCHITECTS
126 Fifth Avenue 9th Floor
New York New York 10011
212 652 2966

Seal

WITSELL EVANS & RASCO P.A. REGISTERED ARCHITECTS NO C44 ARKANSAS

Issue	Date
100% Construction Documents	09/27/02
90% Progress Printing	08/30/02
100% Struct./CD Progress	07/01/02
Bridge Bldg Substructure	06/14/02
100% Steel & Concrete CD & Architectural CD Progress	05/15/02
100% Design Development	03/01/02

Job No 9908

Scale 1/8" = 1'-0"

Date September 27, 2002

Title

GROUND LEVEL PARTIAL PLAN

Sheet No

A101c

FOR OFFICIAL USE ONLY

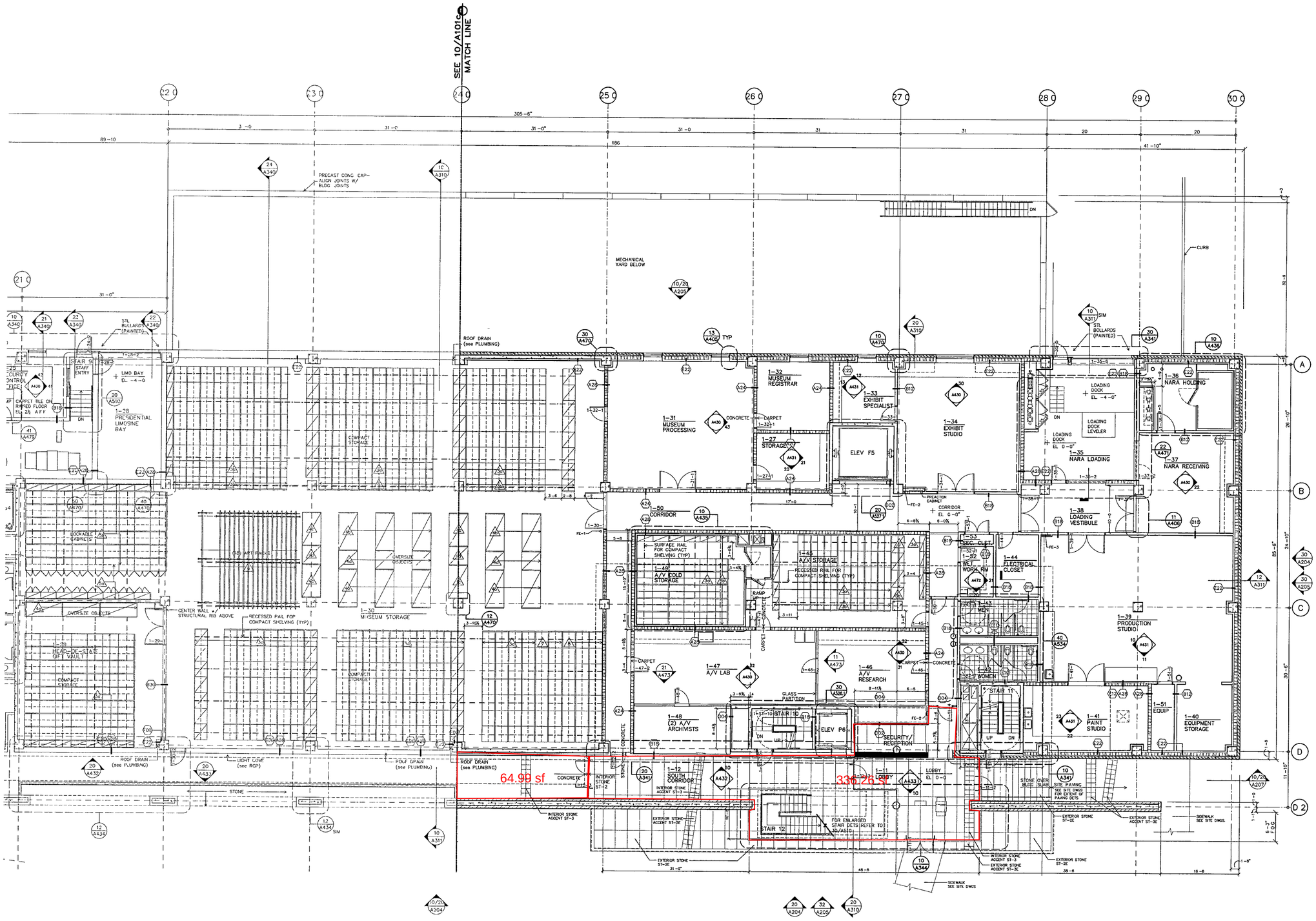

GROUND FLOOR PLAN D

SCALE 1/8" = 1'-0"

AFP-001 dwg 10

WILLIAM J CLINTON PRESIDENTIAL CENTER

LITTLE ROCK, ARKANSAS

Architect

POLSHEK PARTNERSHIP LLP
320 West 13th Street
New York, New York 10014
212 807 7171

Coordinating Architects

POLK STANLEY YEARY ARCHITECTS Ltd
700 South Schiller Street
Little Rock, Arkansas 72201
501 378 0878

WITSELL EVANS RASCO
901 West Third Street
Little Rock, Arkansas 72201
501 374 5300

WOODS CARADINE ARCHITECTS
2200 South Main Street
Little Rock, Arkansas 72206
501 374 4060

Landscape Architects

HARGREAVES ASSOCIATES
118 Magazine Street
Cambridge, Massachusettes 02139
617 661 0070

LANDSCAPE ARCHITECTURE, Inc
2300 Cottondale Lane Suite 202
Little Rock Arkansas 72202
501 374 5610

Structural Engineer

LESLIE E ROBERTSON ASSOC., RLLP
30 Broad Street, 47th Floor
New York New York 10004
212 750 9000

MEP Engineers

FLACK + KURTZ Inc.
475 Fifth Avenue
New York New York 10017
212 532 9600

CROMWELL ARCHITECTS ENGINEERS
101 South Spring Street
Little Rock Arkansas 72201
501 372 2900

Curtainwall Consultant

R A. HEINTGES ARCHITECTS
126 Fifth Avenue, 9th Floor
New York, New York 10011
212 652-2966

Seal

WITSELL, EVANS & RASCO, P.A. REGISTERED ARCHITECTS NO C-44 ARKANSAS

Issue	Date
100% Construction Documents	09/27/02
90% Progress Printing	08/30/02
100% Struct./CD Progress	07/01/02
Bridge Bldg Substructure	06/14/02
100% Steel & Concrete CD & Architectural CD Progress	05/15/02
100% Design Development	03/01/02

Job No 9908

Scale 1/8" = 1'-0"

Date September 27, 2002

Title GROUND LEVEL PARTIAL PLAN

Sheet No A101d

FOR OFFICIAL USE ONLY

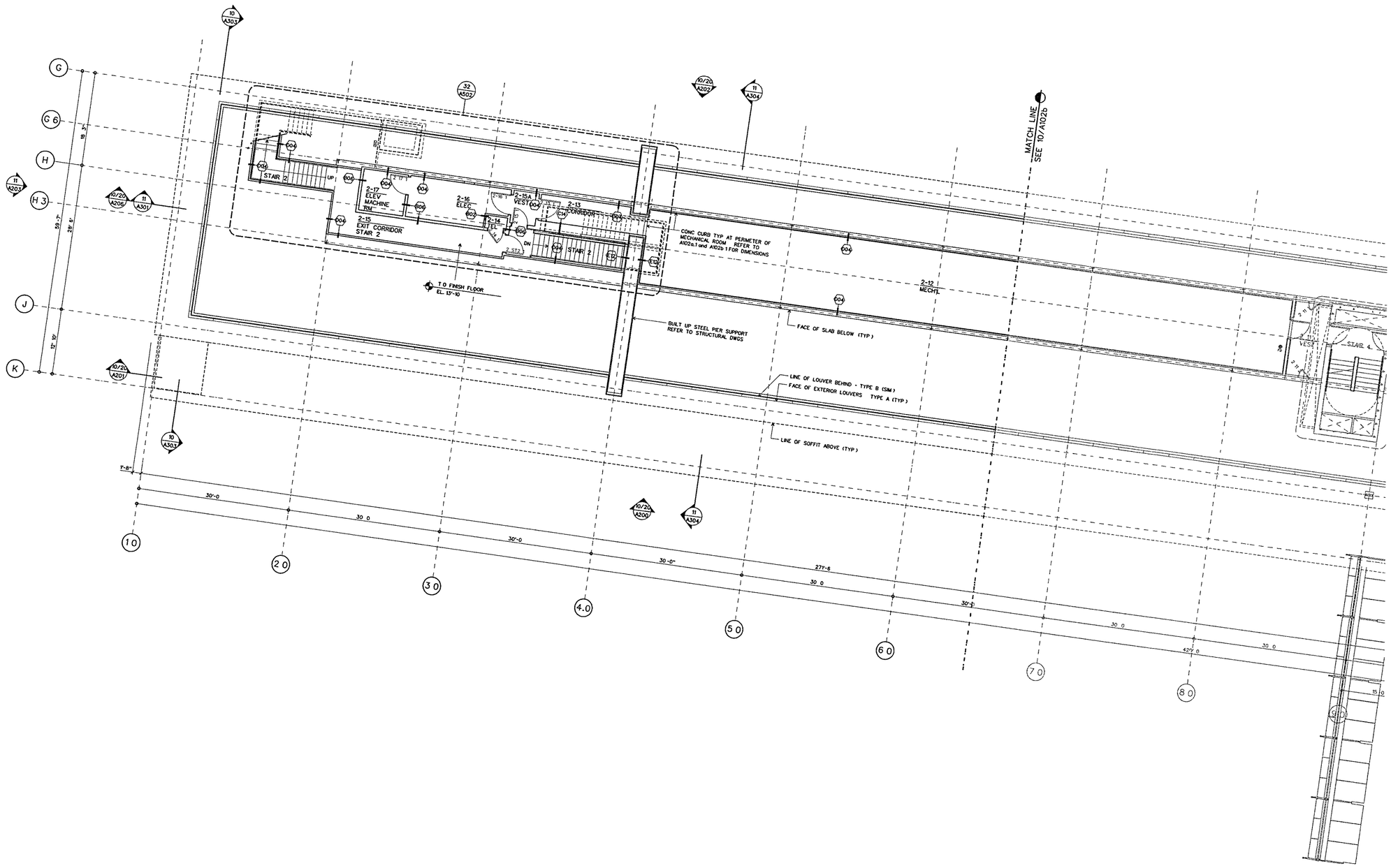

SECOND LEVEL FLOOR PLAN A

SCALE 1/8" = 1-0

AFP-02 DGN

10

WILLIAM J CLINTON PRESIDENTIAL CENTER

LITTLE ROCK, ARKANSAS

Architect

POLSHEK PARTNERSHIP LLP
320 West 13th Street
New York, New York 10014
212.807 7171

Coordinating Architects

POLK STANLEY YEARY ARCHITECTS Ltd
700 South Schiller Street
Little Rock Arkansas 72201
501 378 0878

WITSELL EVANS RASCO
901 West Third Street
Little Rock Arkansas 72201
501.374 5300

WOODS CARADINE ARCHITECTS
2200 South Main Street
Little Rock, Arkansas 72206
501 374 4060

Landscape Architects

HARGREAVES ASSOCIATES
118 Magazine Street
Cambridge Massachusettes 02139
617 661 0070

LANDSCAPE ARCHITECTURE, Inc.
2300 Cottondale Lane Suite 202
Little Rock, Arkansas 72202
501 374 5610

Structural Engineer

LESLIE E. ROBERTSON ASSOC RLLP
30 Broad Street, 47th Floor
New York, New York 10004
212.750 9000

MEP Engineers

FLACK + KURTZ Inc
475 Fifth Avenue
New York, New York 10017
212.532.9600

CROMWELL ARCHITECTS ENGINEERS
101 South Spring Street
Little Rock, Arkansas 72201
501 372 2900

Curtainwall Consultant

R A. HEINTGES ARCHITECTS
126 Fifth Avenue, 9th Floor
New York, New York 10011
212 652-2966

Seal

RICHARD OLCOTT
REGISTERED ARCHITECT
3405
ARKANSAS

Issue	Date
100% Construction Documents	09/27/02
90% Progress Printing	08/30/02
100% Struct / CD Progress	07/01/02
100% Steel & Concrete CD & Architectural CD Progress	05/15/02
100% Design Development	03/01/02

Job No 9908

Scale 1/8" = 1'-0"

Date September 27, 2002

Title

SECOND LEVEL PARTIAL PLAN

Sheet No

A102a

FOR OFFICIAL USE ONLY

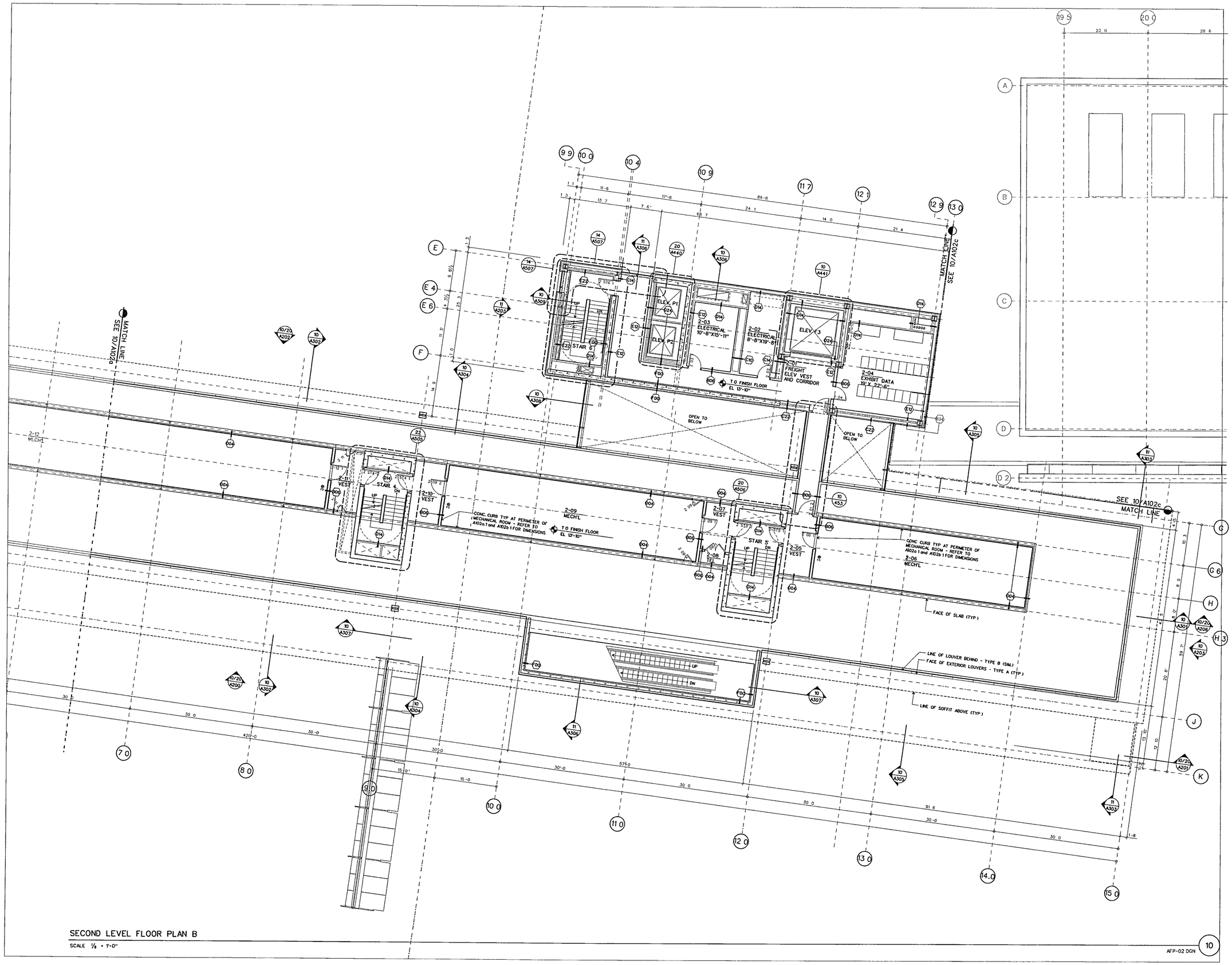

SECOND LEVEL FLOOR PLAN B

SCALE 1/8" = 1'-0"

AFP-02.DGN

10

WILLIAM J CLINTON PRESIDENTIAL CENTER

LITTLE ROCK, ARKANSAS

Architect

POLSHEK PARTNERSHIP LLP
320 West 13th Street
New York, New York 10014
212 807 7171

Coordinating Architects

POLK STANLEY YEARY ARCHITECTS Ltd
700 South Schiller Street
Little Rock, Arkansas 72201
501 378 0878

WITSELL EVANS RASCO
901 West Third Street
Little Rock, Arkansas 72201
501 374 5300

WOODS CARADINE ARCHITECTS
2200 South Main Street
Little Rock, Arkansas 72206
501 374 4060

Landscape Architects

HARGREAVES ASSOCIATES
118 Magazine Street
Cambridge Massachusettes 02139
617 661 0070

LANDSCAPE ARCHITECTURE, Inc.
2300 Cottondale Lane Suite 202
Little Rock, Arkansas 72202
501 374 5810

Structural Engineer

LESLIE E ROBERTSON ASSOC RLLP
30 Broad Street, 47th Floor
New York, New York 10004
212 750 9000

MEP Engineers

FLACK + KURTZ Inc.
475 Fifth Avenue
New York, New York 10017
212 532 9600

CROMWELL ARCHITECTS ENGINEERS
101 South Spring Street
Little Rock, Arkansas 72201
501 372 2900

Curtainwall Consultant

R. A. HEINTGES ARCHITECTS
126 Fifth Avenue 9th Floor
New York New York 10011
212 652-2966

Seal

RICHARD OLSON REGISTERED ARCHITECT 2405 ARKANSAS

Issue	Date
100% Construction Documents	09/27/02
90% Progress Printing	08/30/02
100% Struct./ CD Progress	07/01/02
100% Steel & Concrete CD & Architectural CD Progress	05/15/02
100% Design Development	03/01/02

Job No 8908

Scale 1/8" = 1'-0"

Date September 27, 2002

Title

SECOND LEVEL PARTIAL PLAN

Sheet No

A102b

FOR OFFICIAL USE ONLY

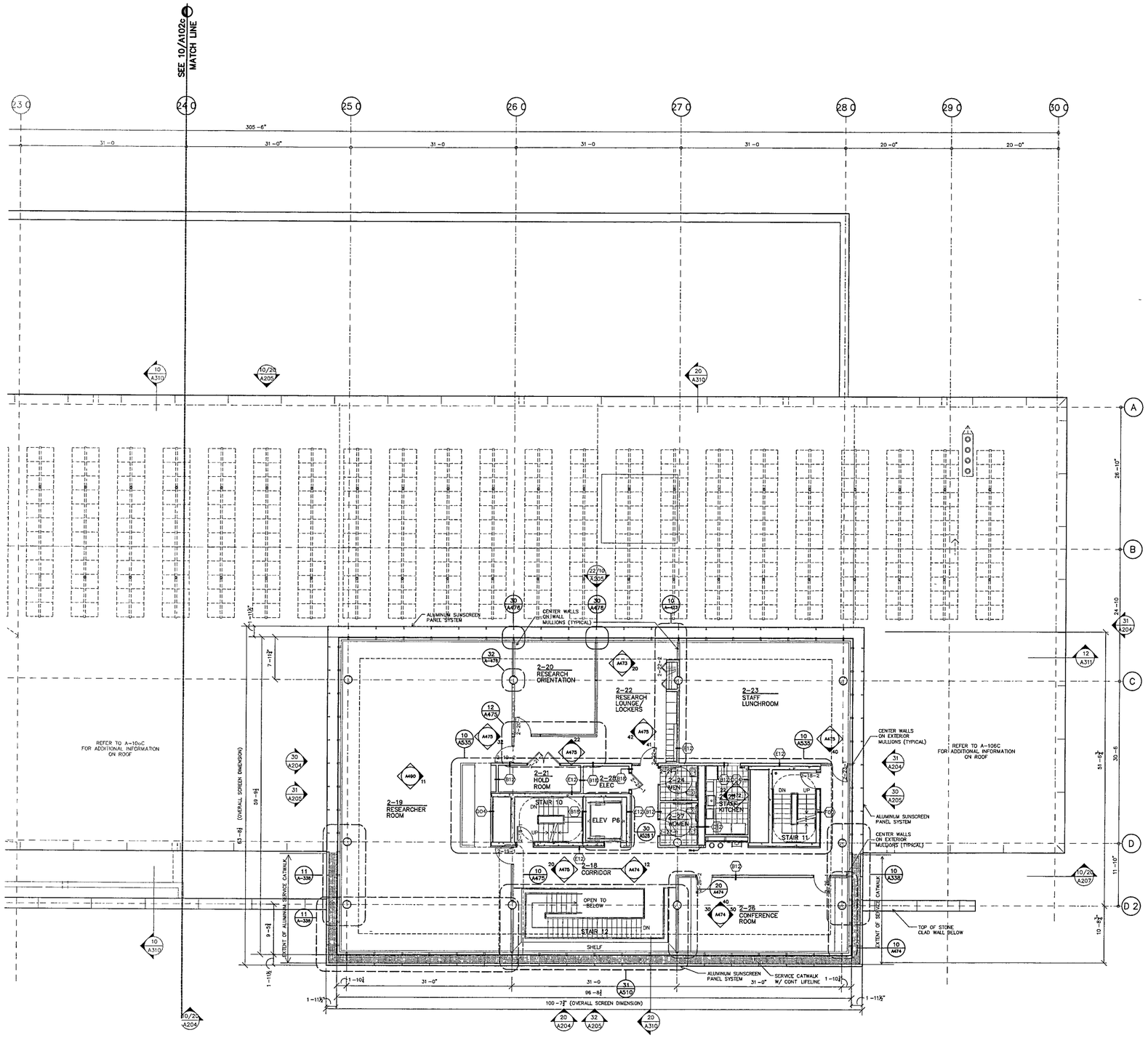

SECOND LEVEL FLOOR PLAN D

SCALE 1/8" = 1 -0"

AFP-02 dwg

10

WILLIAM J CLINTON PRESIDENTIAL CENTER

LITTLE ROCK, ARKANSAS

Architect

POLSHEK PARTNERSHIP LLP
320 West 13th Street
New York, New York 10014
212 807 7171

Coordinating Architects

POLK STANLEY YEARY ARCHITECTS Ltd
700 South Schiller Street
Little Rock, Arkansas 72201
501 378 0878

WITSELL EVANS RASCO
901 West Third Street
Little Rock, Arkansas 72201
501 374 5300

WOODS CARADINE ARCHITECTS
2200 South Main Street
Little Rock, Arkansas 72206
501 374 4060

Landscape Architects

HARGREAVES ASSOCIATES
118 Magazine Street
Cambridge, Massachusettes 02139
617 661 0070

LANDSCAPE ARCHITECTURE, Inc
2300 Cottondale Lane Suite 202
Little Rock Arkansas 72202
501 374 5610

Structural Engineer

LESLIE E ROBERTSON ASSOC RLLP
30 Broad Street 47th Floor
New York New York 10004
212 750 9000

MEP Engineers

FLACK + KURTZ Inc
475 Fifth Avenue
New York, New York 10017
212 532 9600

CROMWELL ARCHITECTS ENGINEERS
101 South Spring Street
Little Rock, Arkansas 72201
501 372 2900

Curtainwall Consultant

R A. HEINTGES ARCHITECTS
126 Fifth Avenue, 9th Floor
New York. New York 10011
212 652 2966

Seal

WITSELL EVANS & RASCO P.A.
REGISTERED ARCHITECTS
NO 1-44
ARKANSAS

Issue	Date
100% Construction Documents	09/27/02
90% Progress Printing	08/30/02
100% Struct/CD Progress	07/01/02
Bridge Bldg Substructure	06/14/02
100% Steel & Concrete CD	05/15/02
& Architectural CD Progress	
100% Design Development	03/01/02

Job No
9908

Scale
1/8" = 1'-0"

Date
September 27, 2002

Title

SECOND LEVEL
PARTIAL PLAN

Sheet No

A102d

FOR OFFICIAL USE ONLY

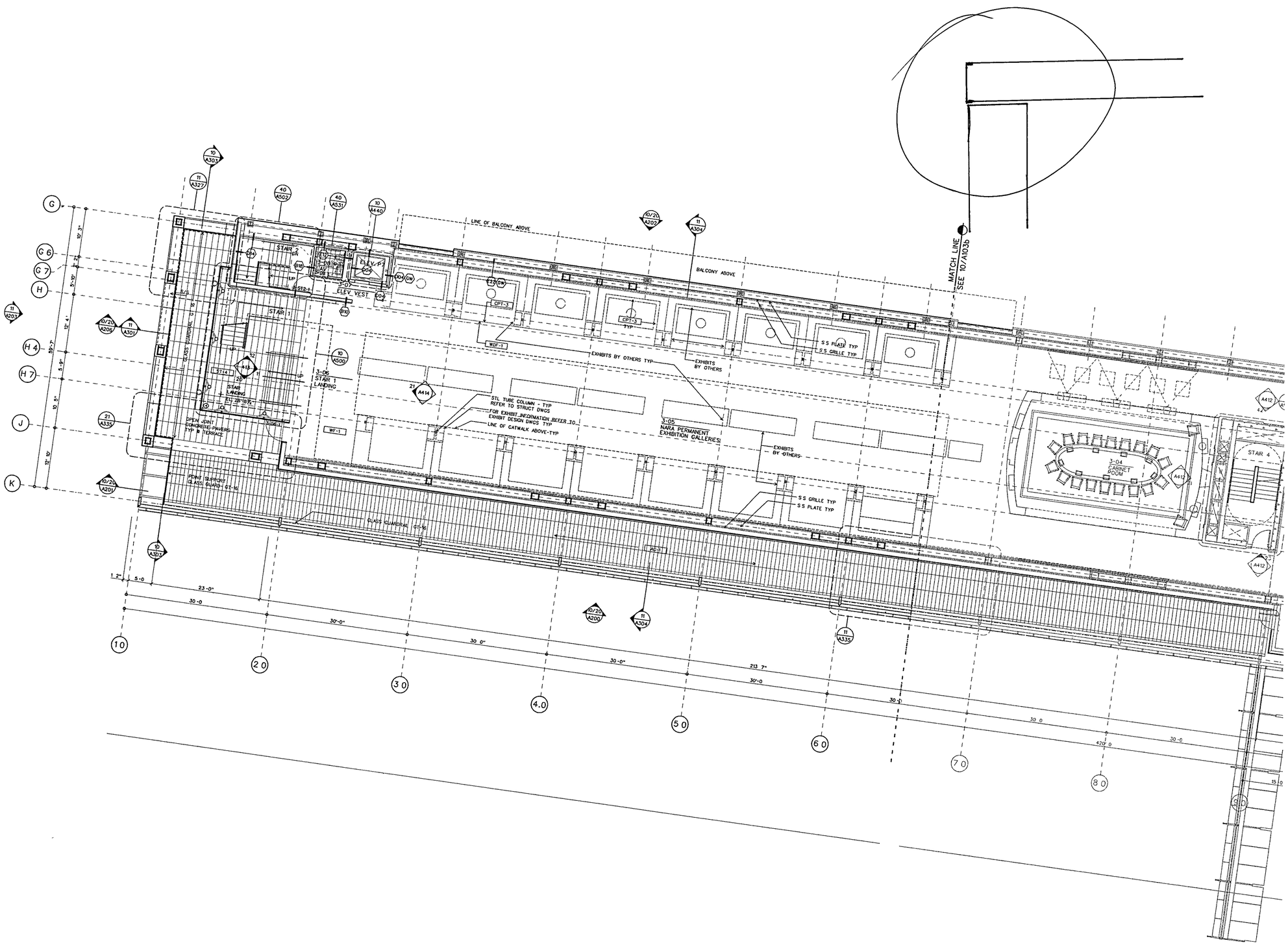

MUSEUM LOWER LEVEL FLOOR PLAN A

SCALE 1/8 = 1'-0'

AFP-03.DGN 10

WILLIAM J CLINTON PRESIDENTIAL CENTER

LITTLE ROCK, ARKANSAS

Architect

POLSHEK PARTNERSHIP LLP
320 West 13th Street
New York, New York 10014
212.807 7171

Coordinating Architects

POLK STANLEY YEARY ARCHITECTS Ltd
700 South Schiller Street
Little Rock, Arkansas 72201
501 378.0878

WITSELL EVANS RASCO
901 West Third Street
Little Rock, Arkansas 72201
501 374 5300

WOODS CARADINE ARCHITECTS
2200 South Main Street
Little Rock, Arkansas 72206
501 374 4060

Landscape Architects

HARGREAVES ASSOCIATES
118 Magazine Street
Cambridge Massachusettes 02139
617 661 0070

LANDSCAPE ARCHITECTURE Inc
2300 Cottondale Lane Suite 202
Little Rock, Arkansas 72202
501 374 5810

Structural Engineer

LESLIE E ROBERTSON ASSOC , RLLP
30 Broad Street, 47th Floor
New York, New York 10004
212.750 9000

MEP Engineers

FLACK + KURTZ Inc.
475 Fifth Avenue
New York, New York 10017
212 532.9600

CROMWELL ARCHITECTS ENGINEERS
101 South Spring Street
Little Rock, Arkansas 72201
501 372 2900

Curtainwall Consultant

R A. HEINTGES ARCHITECTS
125 Fifth Avenue 9th Floor
New York, New York 10011
212 652-2966

Seal

RICHARD OLDSON REGISTERED ARCHITECT 3405 ARKANSAS

Issue	Date
100% Construction Documents	09/27/02
90% Progress Printing	08/30/02
100% Struct./ CD Progress	07/01/02
100% Steel & Concrete CD & Architectural CD Progress	05/15/02
100% Design Development	03/01/02

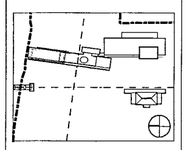

Job No 9908

Scale 1/8" = 1'-0"

Date September 27 2002

Title MUSEUM LOWER LEVEL PARTIAL PLAN

Sheet No A103a

FOR OFFICIAL USE ONLY

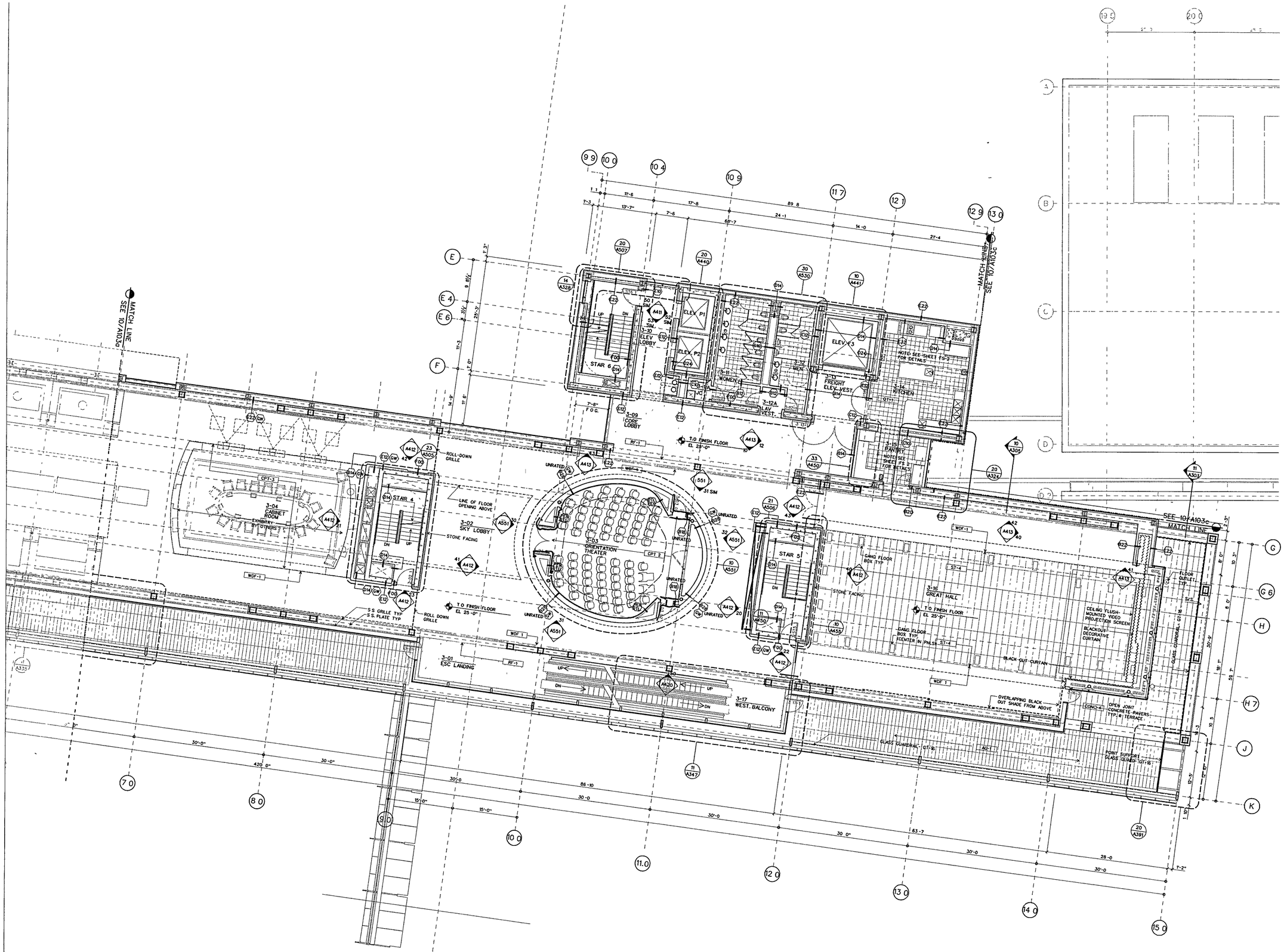

MUSEUM LOWER LEVEL FLOOR PLAN B

SCALE 1/8" = 1'-0"

AFP-03 DGN

10

WILLIAM J CLINTON PRESIDENTIAL CENTER

LITTLE ROCK, ARKANSAS

Architect

POLSHEK PARTNERSHIP LLP
320 West 13th Street
New York, New York 10014
212 607 7171

Coordinating Architects

POLK STANLEY YEARY ARCHITECTS Ltd
700 South Schiller Street
Little Rock, Arkansas 72201
501 378 0878

WITSELL EVANS RASCO
901 West Third Street
Little Rock, Arkansas 72201
501 374.5300

WOODS CARADINE ARCHITECTS
2200 South Main Street
Little Rock, Arkansas 72206
501 374 4060

Landscape Architects

HARGREAVES ASSOCIATES
118 Magazine Street
Cambridge Massachusettes 02139
617 661 0070

LANDSCAPE ARCHITECTURE, Inc.
2300 Cottondale Lane Suite 202
Little Rock, Arkansas 72202
501 374 5610

Structural Engineer

LESLIE E. ROBERTSON ASSOC., RLLP
30 Broad Street, 47th Floor
New York New York 10004
212.750 9000

MEP Engineers

FLACK + KURTZ Inc.
475 Fifth Avenue
New York, New York 10017
212 532.9600

CROMWELL ARCHITECTS ENGINEERS
101 South Spring Street
Little Rock, Arkansas 72201
501 372.2900

Curtainwall Consultant

R. A. HEINTGES ARCHITECTS
126 Fifth Avenue 9th Floor
New York, New York 10011
212 652-2966

Seal

RICHARD OLCZAK REGISTERED ARCHITECT 3405 ARKANSAS

Issue	Date
100% Construction Documents	09/27/02
90% Progress Printing	08/30/02
100% Struct./ CD Progress	07/01/02
100% Steel & Concrete CD & Architectural CD Progress	05/15/02
100% Design Development	03/01/02

Job No 9908

Scale 1/8" = 1'-0"

Date September 27 2002

Title

MUSEUM LOWER LEVEL PARTIAL PLAN

Sheet No

A103b

FOR OFFICIAL USE ONLY

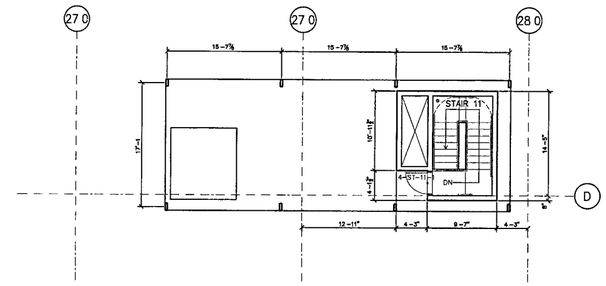

FOURTH LEVEL FLOOR PLAN

SCALE 9" = 1'-0"

AFP-03 dwg

20

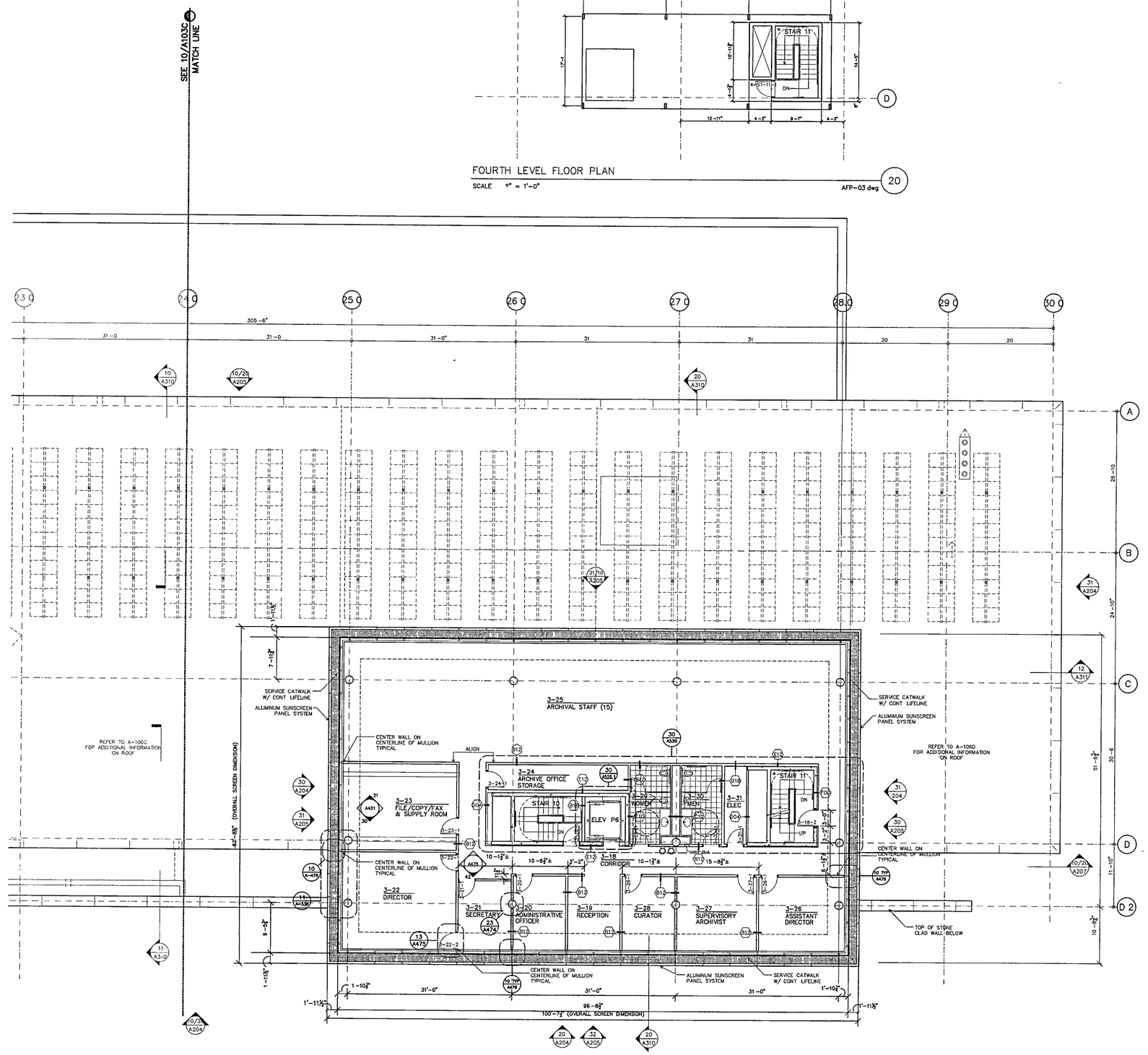

THIRD LEVEL FLOOR PLAN D

SCALE 1/8" = 1'-0"

AFP-03 dwg

10

WILLIAM J CLINTON PRESIDENTIAL CENTER

LITTLE ROCK ARKANSAS

Architect

POLSHEK PARTNERSHIP LLP
320 West 13th Street
New York, New York 10014
212 807 7171

Coordinating Architects

POLK STANLEY YEARY ARCHITECTS Ltd
700 South Schiller Street
Little Rock, Arkansas 72201
501 378 0878

WITSELL EVANS RASCO
901 West Third Street
Little Rock, Arkansas 72201
501 374 5300

WOODS CARADINE ARCHITECTS
2200 South Main Street
Little Rock Arkansas 72206
501 374 4060

Landscape Architects

HARGREAVES ASSOCIATES
118 Magazine Street
Cambridge, Massachusetts 02139
617 661 0070

LANDSCAPE ARCHITECTURE Inc
2300 Cottondale Lane Suite 202
Little Rock, Arkansas 72202
501 374 5610

Structural Engineer

LESLIE E ROBERTSON ASSOC , RLLP
30 Broad Street, 47th Floor
New York New York 10004
212 750 9000

MEP Engineers

FLACK + KURTZ Inc
475 Fifth Avenue
New York New York 10017
212 532 9600

CROMWELL ARCHITECTS ENGINEERS
101 South Spring Street
Little Rock, Arkansas 72201
501 372 2900

Curtainwall Consultant

R. A. HEINTGES ARCHITECTS
126 Fifth Avenue 9th Floor
New York New York 10011
212 652-2966

Seal

WITSELL EVANS & RASCO P.A. REGISTERED ARCHITECTS 9-27-02 NO C-44 ARKANSAS

Issue	Date
100% Construction Documents	09/27/02
90% Progress Printing	08/30/02
100% Struct/CD Progress	07/01/02
Bridge Bldg Substructure	06/14/02
100% Steel & Concrete CD & Architectural CD Progress	05/15/02
100% Design Development	03/01/02

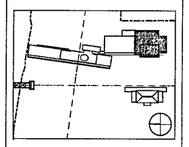

Job No 9908

Scale 1/8" = 1'-0"

Date September 27, 2002

Title

THIRD LEVEL PARTIAL PLAN

Sheet No

A103d

FOR OFFICIAL USE ONLY

1/3 Nov 1 Delivery

2/3

3/3

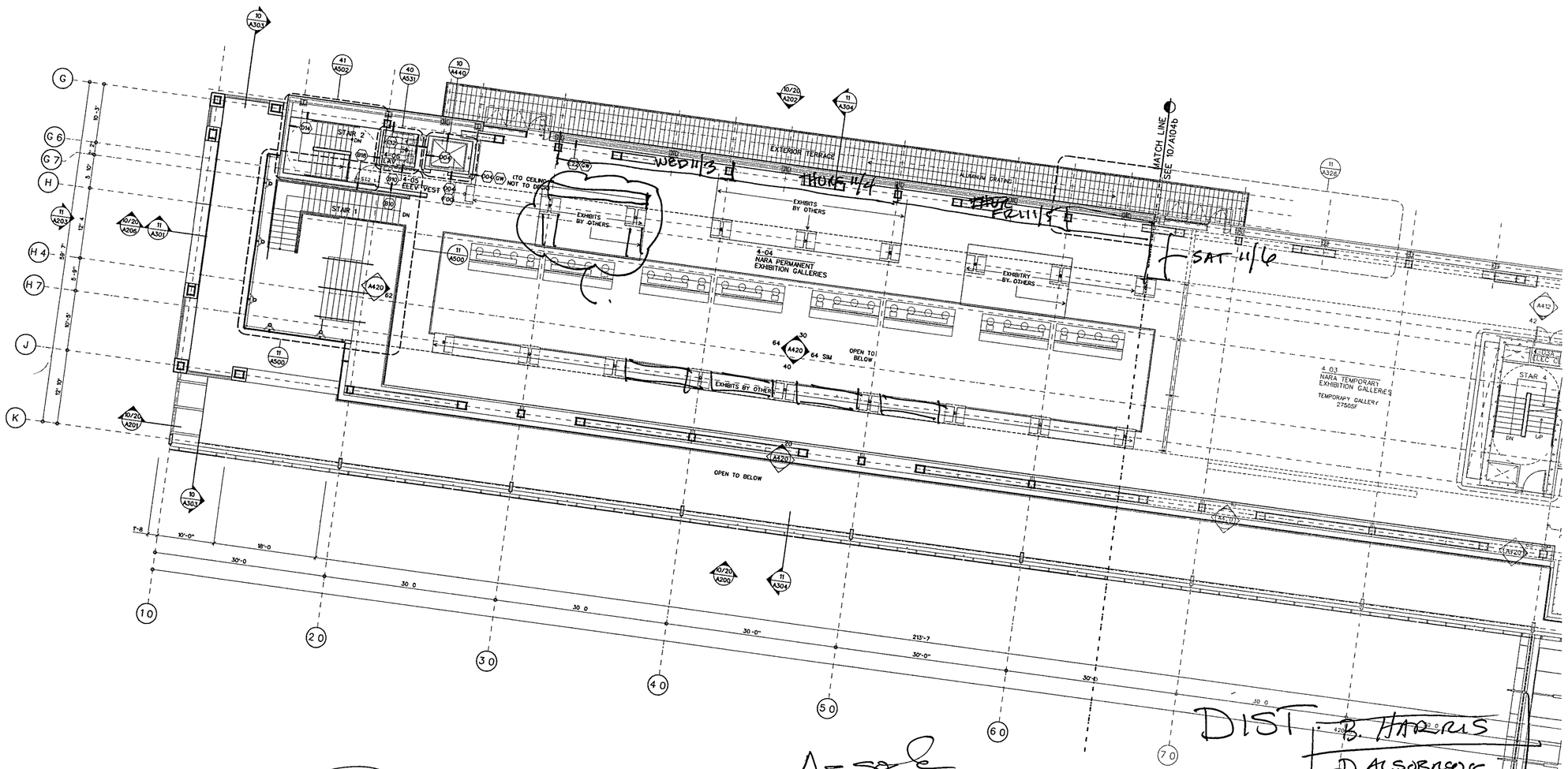

Delivery

Assple

11/1/04

DIST.
B. HARRIS
D. ALSOBROOK
E. Robison
B.
S. Sheuft
AJ

MUSEUM UPPER LEVEL FLOOR PLAN A

SCALE 1/8" = 1'-0"

AFP-04 DGN 10

WILLIAM J CLINTON PRESIDENTIAL CENTER

LITTLE ROCK, ARKANSAS

Architect

POLSHEK PARTNERSHIP LLP
320 West 13th Street
New York, New York 10014
212 807 7171

Coordinating Architects

POLK STANLEY YEARY ARCHITECTS Ltd
700 South Schiller Street
Little Rock, Arkansas 72201
501 378 0878

WITSELL EVANS RASCO
901 West Third Street
Little Rock, Arkansas 72201
501 374 5300

WOODS CARADINE ARCHITECTS
2200 South Main Street
Little Rock, Arkansas 72206
501 374 4060

Landscape Architects

HARGREAVES ASSOCIATES
118 Magazine Street
Cambridge Massachusettes 02139
617 661 0070

LANDSCAPE ARCHITECTURE, Inc.
2300 Cottondale Lane Suite 202
Little Rock, Arkansas 72202
501 374 5610

Structural Engineer

LESLIE E. ROBERTSON ASSOC RLLP
30 Broad Street, 47th Floor
New York, New York 10004
212.750 9000

MEP Engineers

FLACK + KURTZ Inc.
475 Fifth Avenue
New York New York 10017
212 532 9600

CROMWELL ARCHITECTS ENGINEERS
101 South Spring Street
Little Rock, Arkansas 72201
501 372.2900

Curtainwall Consultant

R. A. HEINTGES ARCHITECTS
126 Fifth Avenue 9th Floor
New York, New York 10011
212 652-2968

Seal

RICHARD OLOSON REGISTERED ARCHITECT 3405 ARKANSAS

Issue	Date
100% Construction Documents	09/27/02
90% Progress Printing	08/30/02
100% Struct./ CD Progress	07/01/02
100% Steel & Concrete CD & Architectural CD Progress	05/15/02
100% Design Development	03/01/02

Job No 9908

Scale 1/8" = 1'-0"

Date September 27, 2002

Title MUSEUM UPPER LEVEL PARTIAL PLAN

Sheet No A104a

FOR OFFICIAL USE ONLY

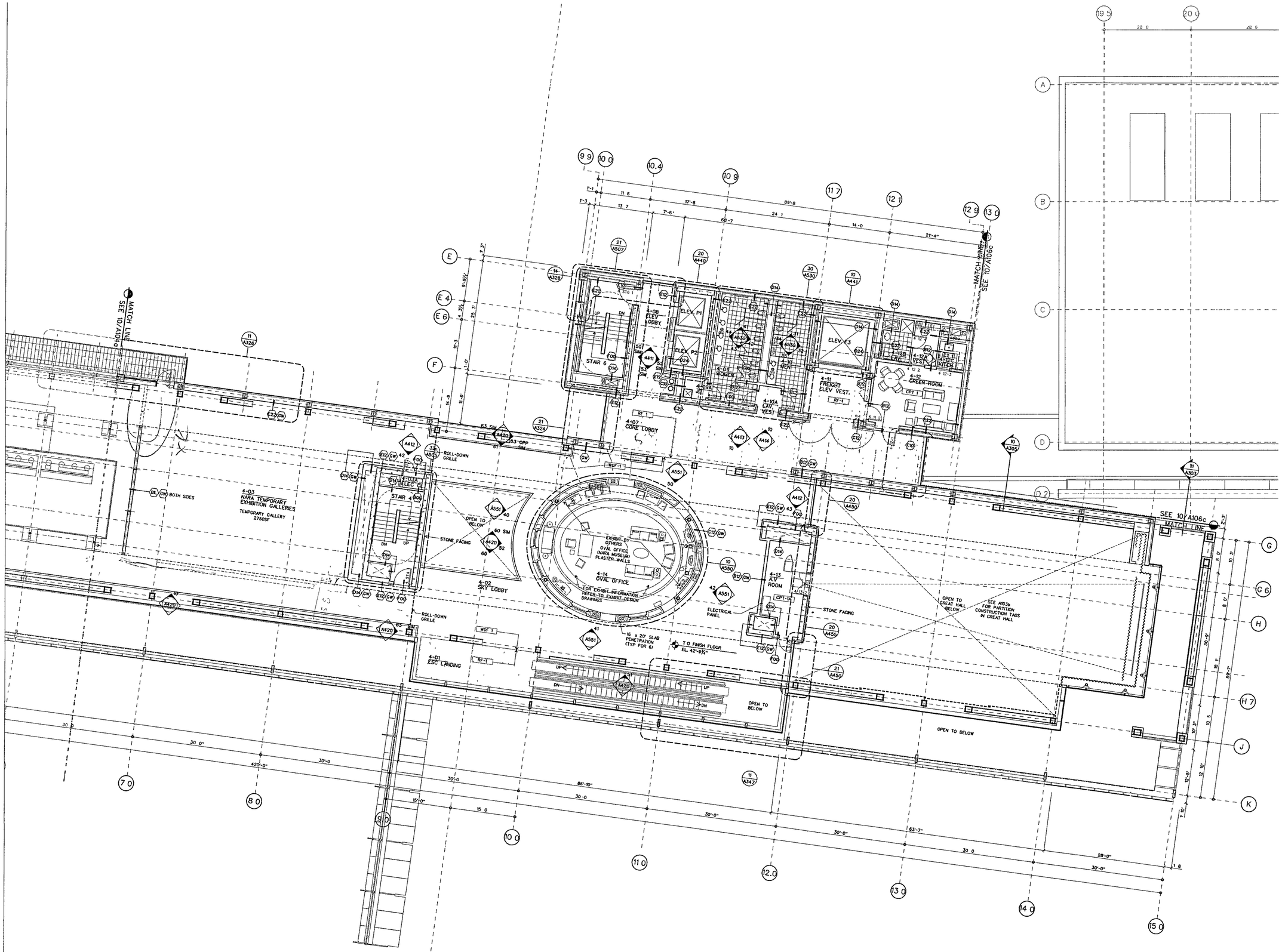

MUSEUM UPPER LEVEL FLOOR PLAN B

SCALE 1/8" = 1-0

AFP-04 DGN

WILLIAM J CLINTON PRESIDENTIAL CENTER

LITTLE ROCK, ARKANSAS

Architect

POLSHEK PARTNERSHIP LLP
320 West 13th Street
New York, New York 10014
212 807 7171

Coordinating Architects

POLK STANLEY YEARY ARCHITECTS Ltd
700 South Schiller Street
Little Rock, Arkansas 72201
501 378 0878

WITSELL EVANS RASCO
901 West Third Street
Little Rock, Arkansas 72201
501 374 5300

WOODS CARADINE ARCHITECTS
2200 South Main Street
Little Rock, Arkansas 72206
501 374 4060

Landscape Architects

HARGREAVES ASSOCIATES
118 Magazine Street
Cambridge Massachusettes 02139
617 661 0070

LANDSCAPE ARCHITECTURE Inc.
2300 Cottondale Lane Suite 202
Little Rock, Arkansas 72202
501 374 5810

Structural Engineer

LESLIE E. ROBERTSON ASSOC., RLLP
30 Broad Street, 47th Floor
New York, New York 10004
212 750 9000

MEP Engineers

FLACK + KURTZ Inc.
475 Fifth Avenue
New York, New York 10017
212 632 9600

CROMWELL ARCHITECTS ENGINEERS
101 South Spring Street
Little Rock, Arkansas 72201
501 372.2900

Curtainwall Consultant

R. A. HEINTGES ARCHITECTS
126 Fifth Avenue, 9th Floor
New York, New York 10011
212 652-2966

Seal

RICHARD OLCOTT WHITTEMORE ARCHITECT 3405 ARKANSAS

Issue	Date
100% Construction Documents	09/27/02
90% Progress Printing	08/30/02
100% Struct./ CD Progress	07/01/02
100% Steel & Concrete CD & Architectural CD Progress	05/15/02
100% Design Development	03/01/02

Job No 9908

Scale 1/8" = 1-0"

Date September 27, 2002

Title MUSEUM UPPER LEVEL PARTIAL PLAN

Sheet No A104b

FOR OFFICIAL USE ONLY

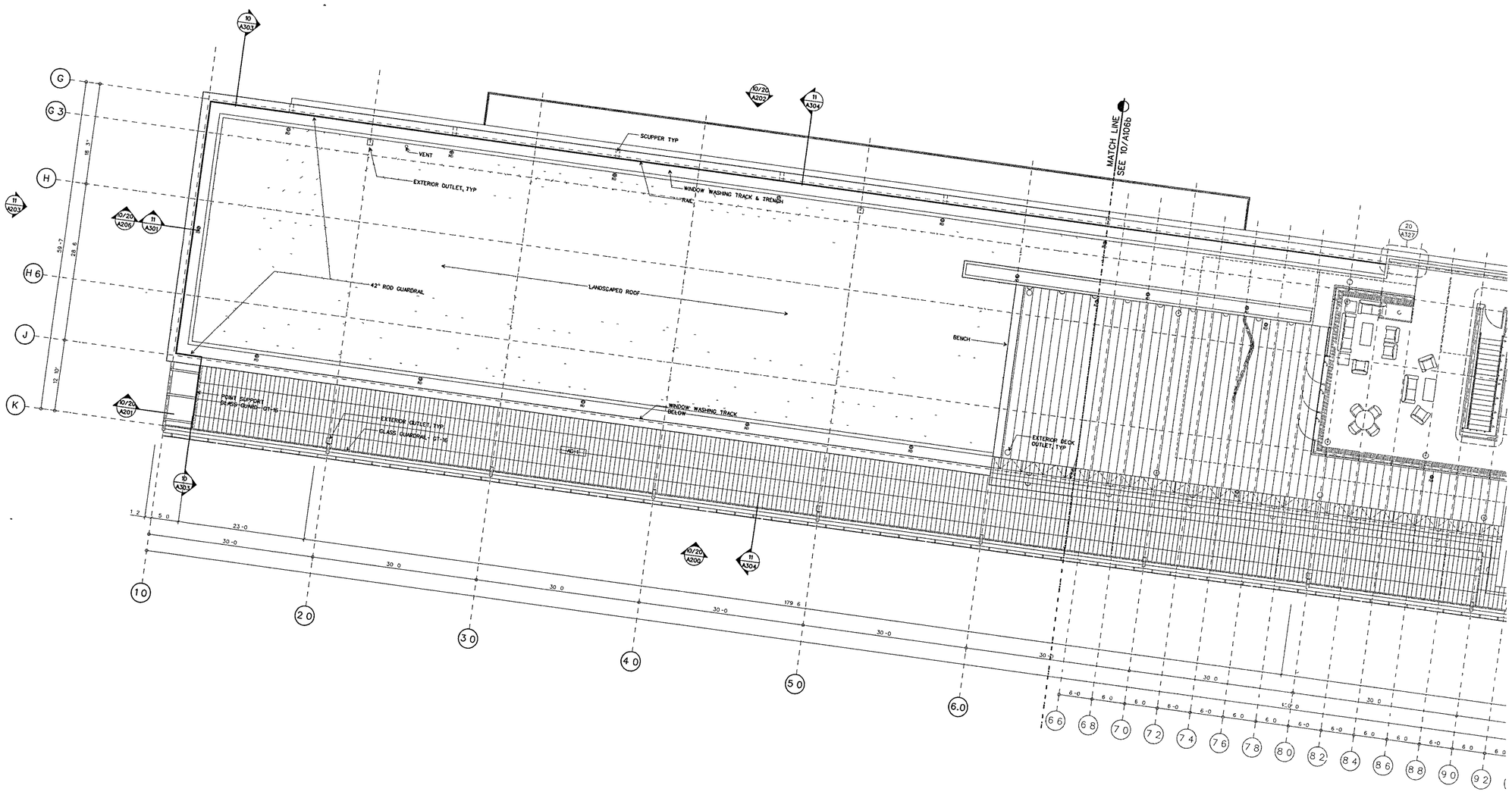

ROOF PLAN A

SCALE 1/8" = 1'-0"

AFP-05 DGN 10

WILLIAM J CLINTON PRESIDENTIAL CENTER

LITTLE ROCK, ARKANSAS

Architect

POLSHEK PARTNERSHIP LLP
320 West 13th Street
New York, New York 10014
212 807 7171

Coordinating Architects

POLK STANLEY YEARY ARCHITECTS Ltd
700 South Schiller Street
Little Rock, Arkansas 72201
501 378 0878

WITSELL EVANS RASCO
901 West Third Street
Little Rock, Arkansas 72201
501 374 5300

WOODS CARADINE ARCHITECTS
2200 South Main Street
Little Rock Arkansas 72206
501 374 4060

Landscape Architects

HARGREAVES ASSOCIATES
118 Magazine Street
Cambridge Massachusettes 02139
617 661 0070

LANDSCAPE ARCHITECTURE Inc.
2300 Cottondale Lane Suite 202
Little Rock, Arkansas 72202
501 374 5810

Structural Engineer

LESLIE E ROBERTSON ASSOC , RLLP
30 Broad Street, 47th Floor
New York, New York 10004
212 750 9000

MEP Engineers

FLACK + KURTZ Inc.
475 Fifth Avenue
New York, New York 10017
212 532 9600

CROMWELL ARCHITECTS ENGINEERS
101 South Spring Street
Little Rock, Arkansas 72201
501 372.2900

Curtainwall Consultant

R. A. HEINTGES ARCHITECTS
126 Fifth Avenue, 9th Floor
New York, New York 10011
212 652-2966

Seal

RICHARD OLSEN REGISTERED ARCHITECT 3405 ARKANSAS

Issue	Date
100% Construction Documents	09/27/02
90% Progress Printing	08/30/02
100% Struct./ CD Progress	07/01/02
100% Steel & Concrete CD & Architectural CD Progress	05/15/02
100% Design Development	03/01/02

Job No 9908

Scale 1/8" = 1'-0"

Date September 27, 2002

Title

EXECUTIVE LEVEL PARTIAL PLAN

Sheet No A105a

FOR OFFICIAL USE ONLY

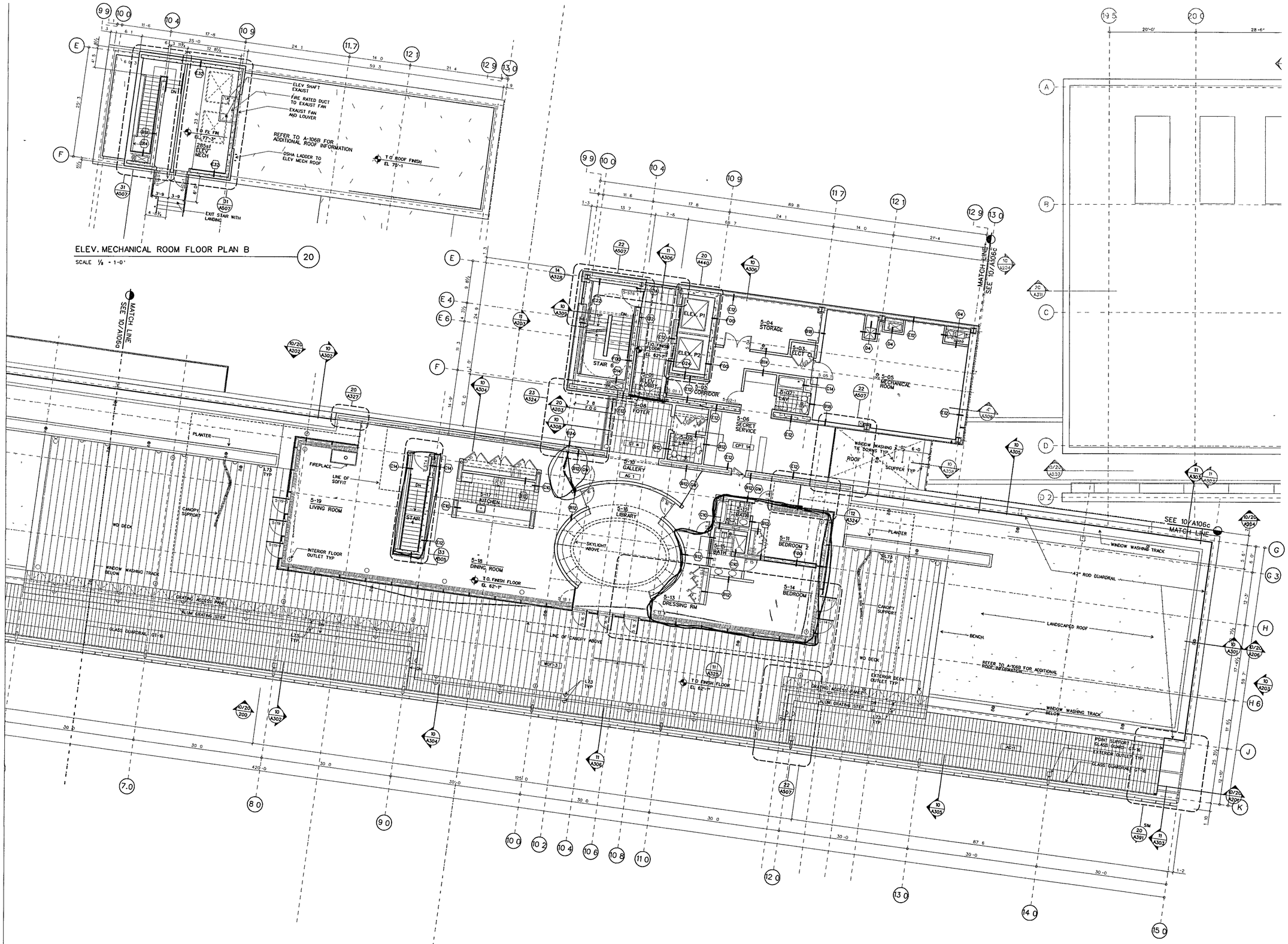

WILLIAM J CLINTON PRESIDENTIAL CENTER

LITTLE ROCK, ARKANSAS

Architect

POLSHEK PARTNERSHIP LLP
320 West 13th Street
New York, New York 10014
212.807 7171

Coordinating Architects

POLK STANLEY YEARY ARCHITECTS Ltd
700 South Schiller Street
Little Rock Arkansas 72201
501 378 0878

WITSELL EVANS RASCO
901 West Third Street
Little Rock, Arkansas 72201
501 374 5300

WOODS CARADINE ARCHITECTS
2200 South Main Street
Little Rock, Arkansas 72206
501 374 4060

Landscape Architects

HARGREAVES ASSOCIATES
118 Magazine Street
Cambridge Massachusettes 02139
617 661 0070

LANDSCAPE ARCHITECTURE, Inc.
2300 Cottondale Lane Suite 202
Little Rock Arkansas 72202
501 374 5610

Structural Engineer

LESLIE E. ROBERTSON ASSOC RLLP
30 Broad Street, 47th Floor
New York, New York 10004
212 750 9000

MEP Engineers

FLACK + KURTZ Inc
475 Fifth Avenue
New York, New York 10017
212.532.9600

CROMWELL ARCHITECTS ENGINEERS
101 South Spring Street
Little Rock Arkansas 72201
501 372 2900

Curtainwall Consultant

R A. HEINTGES ARCHITECTS
126 Fifth Avenue, 9th Floor
New York, New York 10011
212.652-2966

Seal

RICHARD OLOES REGISTERED ARCHITECT 3405 ARKANSAS

Issue	Date
100% Construction Documents	09/27/02
90% Progress Printing	08/30/02
100% Struct/ CD Progress	07/01/02
100% Steel & Concrete CD & Architectural CD Progress	05/15/02
100% Design Development	03/01/02

Job No 9908

Scale 1/8" = 1'-0"

Date September 27, 2002

Title

EXECUTIVE LEVEL PARTIAL PLAN

Sheet No

A105b

FOR OFFICIAL USE ONLY

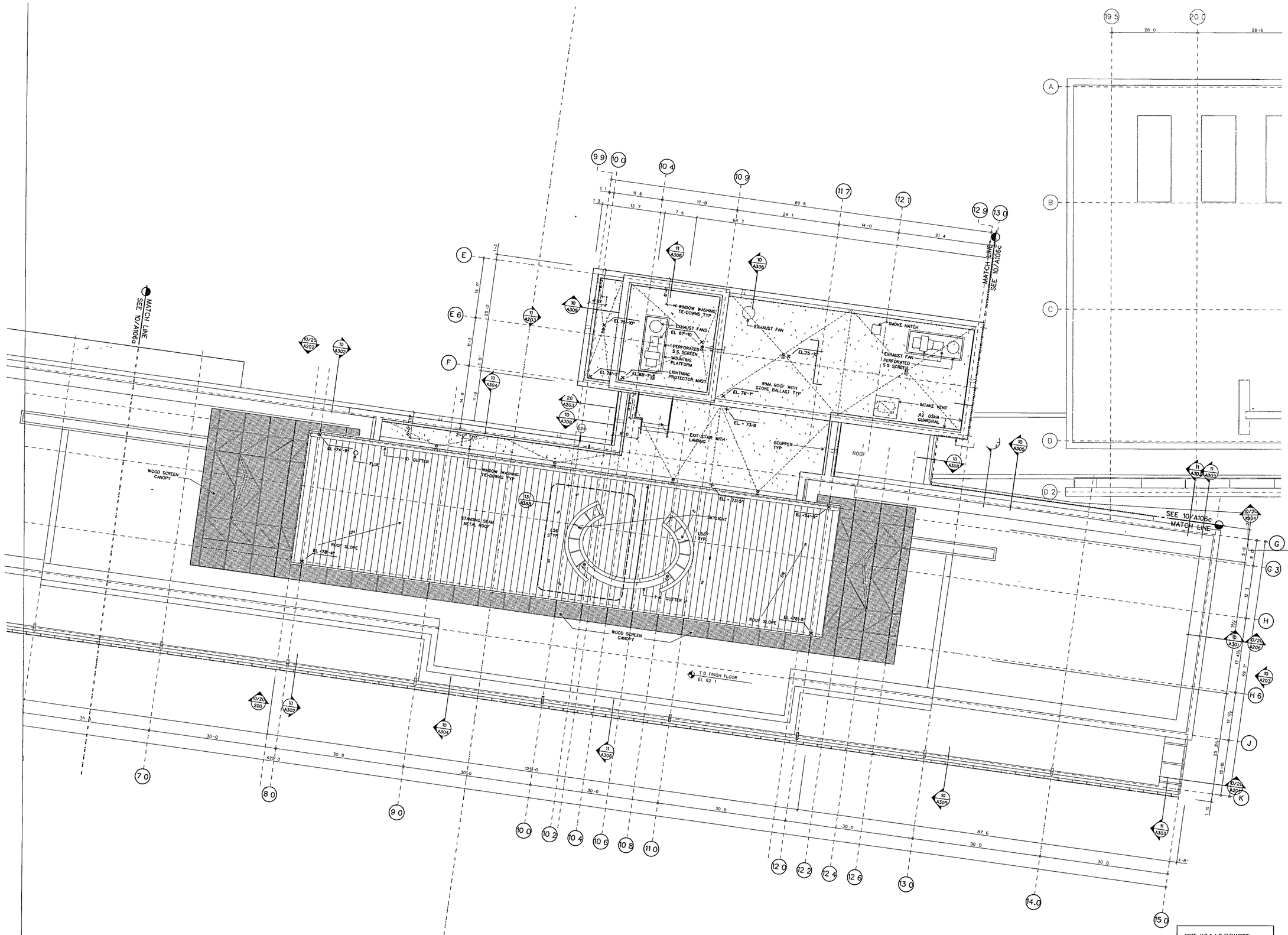

ROOF PLAN B

SCALE 1/8" = 1'-0"

NOTE H.P. & L.P. ELEVATIONS TO TOP OF ROOF FINISH

AFP-ROOF DGN 10

WILLIAM J CLINTON PRESIDENTIAL CENTER

LITTLE ROCK, ARKANSAS

Architect

POLSHEK PARTNERSHIP LLP
320 West 13th Street
New York, New York 10014
212 807 7171

Coordinating Architects

POLK STANLEY YEARY ARCHITECTS Ltd
700 South Schiller Street
Little Rock, Arkansas 72201
501 378 0878

WITSELL EVANS RASCO
901 West Third Street
Little Rock, Arkansas 72201
501 374 5300

WOODS CARADINE ARCHITECTS
2200 South Main Street
Little Rock, Arkansas 72206
501 374 4060

Landscape Architects

HARGREAVES ASSOCIATES
118 Magazine Street
Cambridge Massachusettes 02139
617 661 0070

LANDSCAPE ARCHITECTURE, Inc.
2300 Cottondale Lane Suite 202
Little Rock, Arkansas 72202
501 374 5610

Structural Engineer

LESLIE E. ROBERTSON ASSOC., RLLP
30 Broad Street, 47th Floor
New York, New York 10004
212.750 9000

MEP Engineers

FLACK + KURTZ Inc
475 Fifth Avenue
New York, New York 10017
212 532 9600

CROMWELL ARCHITECTS ENGINEERS
101 South Spring Street
Little Rock, Arkansas 72201
501 372.2900

Curtainwall Consultant

R. A. HEINTGES ARCHITECTS
126 Fifth Avenue, 9th Floor
New York, New York 10011
212.652-2966

Seal

RICHARD OLCOTT REGISTERED ARCHITECT 3406 ARKANSAS

Issue	Date
100% Construction Documents	09/27/02
90% Progress Printing	08/30/02
100% Struct./ CD Progress	07/01/02
100% Steel & Concrete CD & Architectural CD Progress	05/15/02
100% Design Development	03/01/02

Job No 9908

Scale 1/8" = 1'-0"

Date September 27, 2002

Title

ROOF PARTIAL PLAN

Sheet No

A106b

FOR OFFICIAL USE ONLY

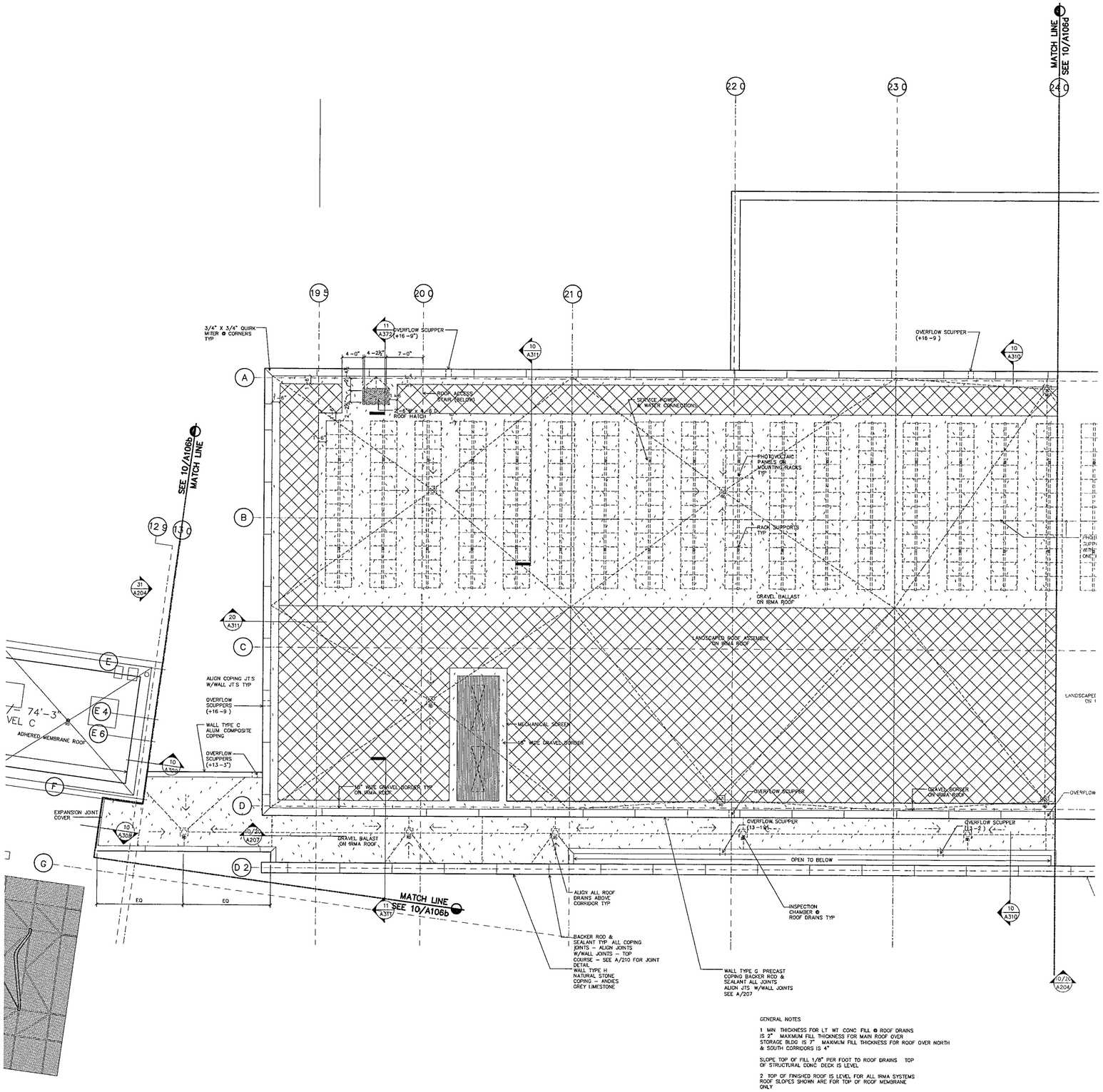

GENERAL NOTES

1 MIN THICKNESS FOR LT WT CONC FILL @ ROOF DRAINS IS 2" MAXIMUM FILL THICKNESS FOR MAIN ROOF OVER STORAGE BLDG IS 7" MAXIMUM FILL THICKNESS FOR ROOF OVER NORTH & SOUTH CORRIDORS IS 4"

SLOPE TOP OF FILL 1/8" PER FOOT TO ROOF DRAINS TOP OF STRUCTURAL CONC DECK IS LEVEL

2 TOP OF FINISHED ROOF IS LEVEL FOR ALL IRMA SYSTEMS ROOF SLOPES SHOWN ARE FOR TOP OF ROOF MEMBRANE ONLY

3 BOTTOM OF OVERFLOW SCUPPERS SHALL BE 2 ABOVE TOP OF ROOF MEMBRANE – SEE BOTTOM OF SCUPPER ELEV'S THIS SHEET

ROOF LEVEL FLOOR PLAN C

SCALE 1/8" = 1'-0"

AFP-ROOF dwg

10

WILLIAM J CLINTON PRESIDENTIAL CENTER

LITTLE ROCK, ARKANSAS

Architect

POLSHEK PARTNERSHIP LLP
320 West 13th Street
New York, New York 10014
212 807 7171

Coordinating Architects

POLK STANLEY YEARY ARCHITECTS Ltd
700 South Schiller Street
Little Rock, Arkansas 72201
501 378 0878

WITSELL EVANS RASCO
901 West Third Street
Little Rock, Arkansas 72201
501 374 5300

WOODS CARADINE ARCHITECTS
2200 South Main Street
Little Rock Arkansas 72206
501 374 4060

Landscape Architects

HARGREAVES ASSOCIATES
118 Magazine Street
Cambridge, Massachusettes 02139
617 661 0070

LANDSCAPE ARCHITECTURE, Inc
2300 Cottondale Lane Suite 202
Little Rock, Arkansas 72202
501 374 5610

Structural Engineer

LESLIE E ROBERTSON ASSOC , RLLP
30 Broad Street, 47th Floor
New York New York 10004
212 750 9000

MEP Engineers

FLACK + KURTZ Inc
475 Fifth Avenue
New York New York 10017
212 532 9600

CROMWELL ARCHITECTS ENGINEERS
101 South Spring Street
Little Rock, Arkansas 72201
501 372 2900

Curtainwall Consultant

R A HEINTGES ARCHITECTS
126 Fifth Avenue, 9th Floor
New York, New York 10011
212 652-2968

Seal

WITSELL EVANS & RASCO P.A. REGISTERED ARCHITECTS NO 044 ARKANSAS

Issue	Date
100% Construction Documents	09/27/02
90% Progress Printing	08/30/02
100% Struct./CD Progress	07/01/02
Bridge Bldg Substructure	06/14/02
100% Steel & Concrete CD	05/15/02
& Architectural CD Progress	
100% Design Development	03/01/02

Job No 9908

Scale 1/8" = 1'-0"

Date September 27, 2002

Title

ROOF PARTIAL PLAN

Sheet No

A106c

FOR OFFICIAL USE ONLY

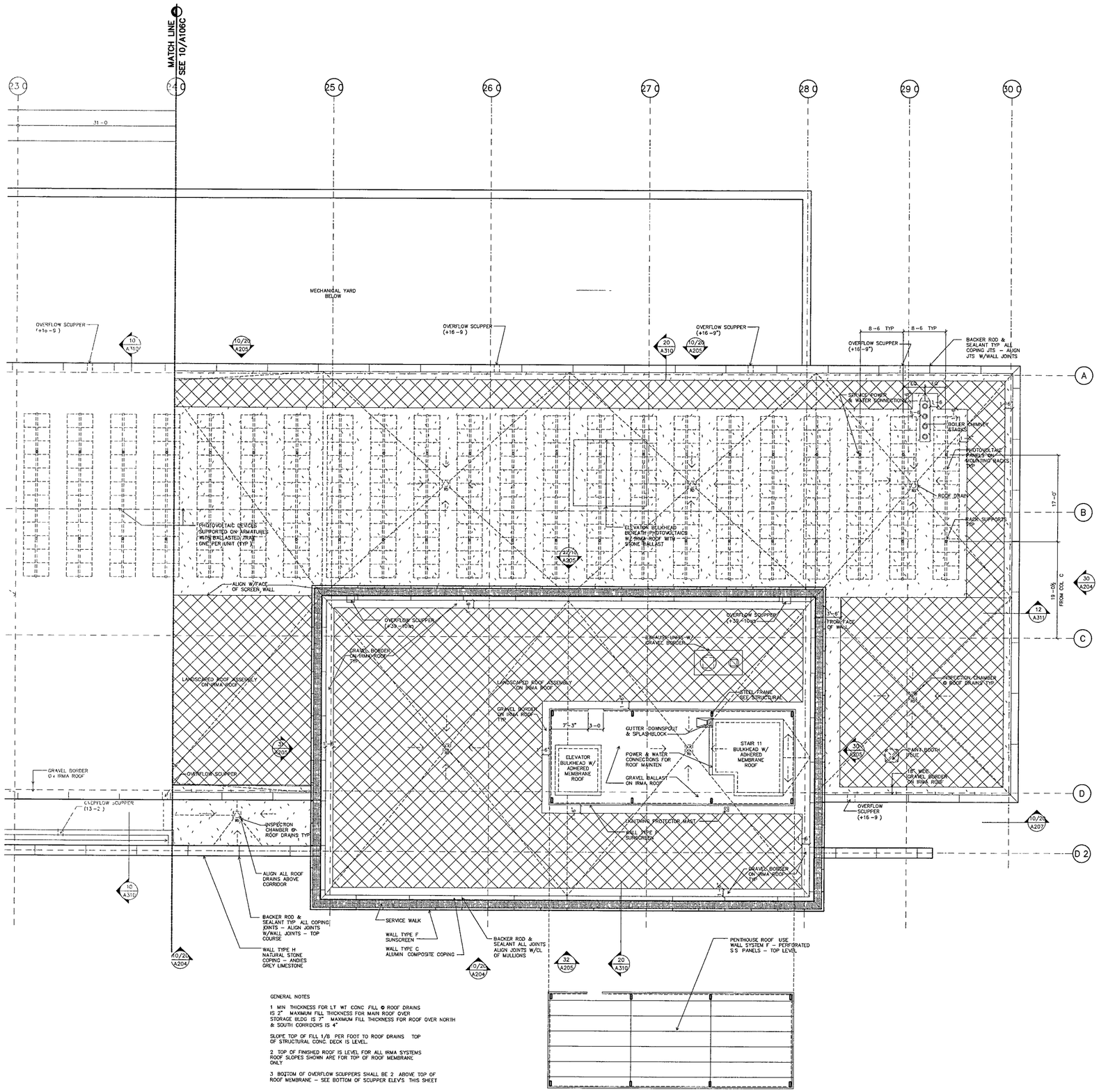

GENERAL NOTES

1 MIN THICKNESS FOR LT WT CONC FILL @ ROOF DRAINS IS 2" MAXIMUM FILL THICKNESS FOR MAIN ROOF OVER STORAGE BLDG IS 7" MAXIMUM FILL THICKNESS FOR ROOF OVER NORTH & SOUTH CORRIDORS IS 4"

SLOPE TOP OF FILL 1/8 PER FOOT TO ROOF DRAINS TOP OF STRUCTURAL CONC. DECK IS LEVEL.

2 TOP OF FINISHED ROOF IS LEVEL FOR ALL IRMA SYSTEMS ROOF SLOPES SHOWN ARE FOR TOP OF ROOF MEMBRANE ONLY

3 BOTTOM OF OVERFLOW SCUPPERS SHALL BE 2 ABOVE TOP OF ROOF MEMBRANE - SEE BOTTOM OF SCUPPER ELEV'S THIS SHEET

ROOF LEVEL FLOOR PLAN D

SCALE 1/8" = 1'-0"

PENTHOUSE ROOF PLAN

AFP-001 dwg

10

WILLIAM J CLINTON PRESIDENTIAL CENTER

LITTLE ROCK, ARKANSAS

Architect

POLSHEK PARTNERSHIP LLP
320 West 13th Street
New York New York 10014
212 807 7171

Coordinating Architects

POLK STANLEY YEARY ARCHITECTS Ltd
700 South Schiller Street
Little Rock, Arkansas 72201
501 378 0878

WITSELL EVANS RASCO
901 West Third Street
Little Rock Arkansas 72201
501 374 5300

WOODS CARADINE ARCHITECTS
2200 South Main Street
Little Rock, Arkansas 72206
501 374 4060

Landscape Architects

HARGREAVES ASSOCIATES
118 Magazine Street
Cambridge Massachusettes 02139
617 661 0070

LANDSCAPE ARCHITECTURE, Inc
2300 Cottondale Lane Suite 202
Little Rock, Arkansas 72202
501 374 5610

Structural Engineer

LESLIE E ROBERTSON ASSOC , RLLP
30 Broad Street, 47th Floor
New York, New York 10004
212 750 9000

MEP Engineers

FLACK + KURTZ Inc.
475 Fifth Avenue
New York, New York 10017
212 532 9600

CROMWELL ARCHITECTS ENGINEERS
101 South Spring Street
Little Rock Arkansas 72201
501 372.2900

Curtainwall Consultant

R A. HEINTGES ARCHITECTS
126 Fifth Avenue 9th Floor
New York New York 10011
212 652 2966

Seal

WITSELL EVANS & RASCO P.A. REGISTERED ARCHITECTS NO C-44 ARKANSAS

Issue	Date
100% Construction Documents	09/27/02
90% Progress Printing	08/30/02
100% Struct./CD Progress	07/01/02
Bridge Bldg Substructure	06/14/02
100% Steel & Concrete CD & Architectural CD Progress	05/15/02
100% Design Development	03/01/02

Job No 9908

Scale 1/8" = 1'-0"

Date September 27 2002

Title ROOF PARTIAL PLAN

Sheet No A106d

FOR OFFICIAL USE ONLY

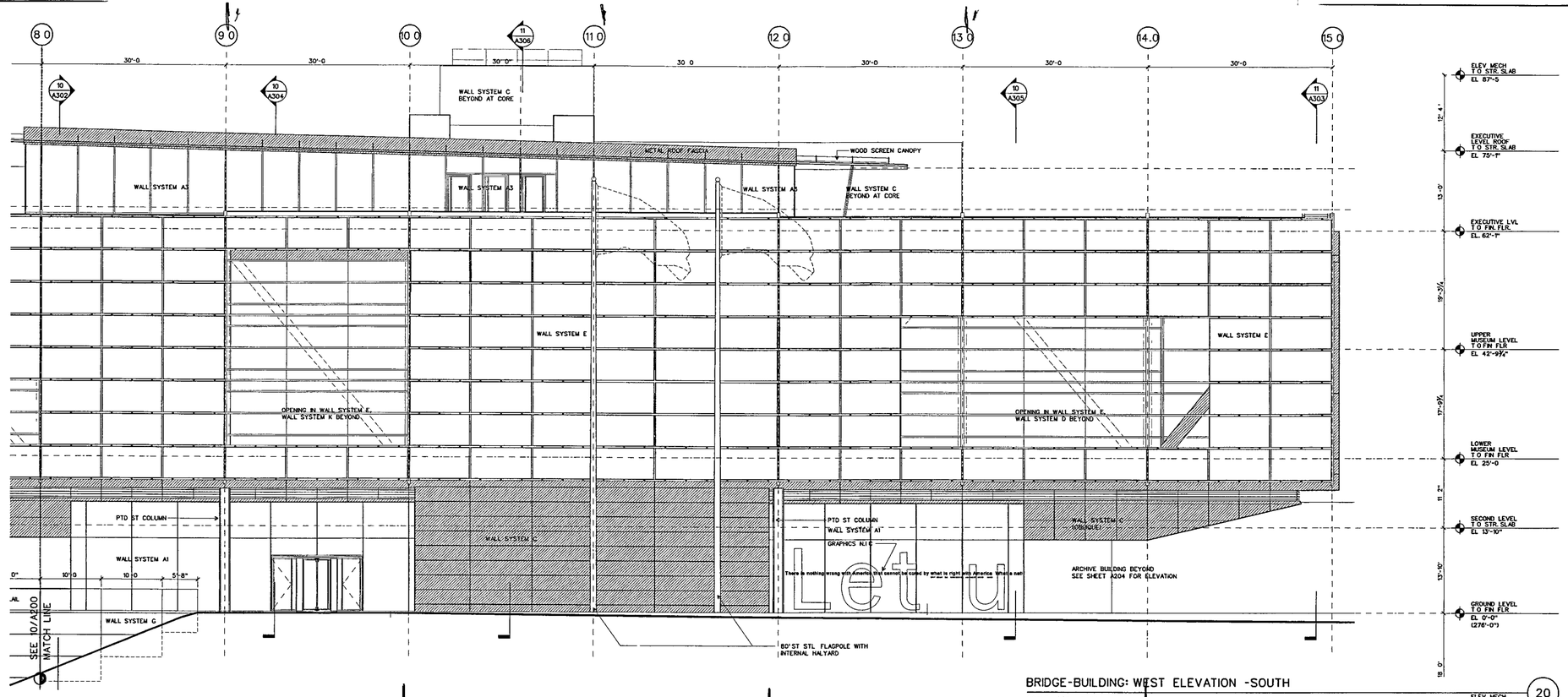

BRIDGE-BUILDING: WEST ELEVATION -SOUTH

SCALE 1/8" = 1'-0'

20

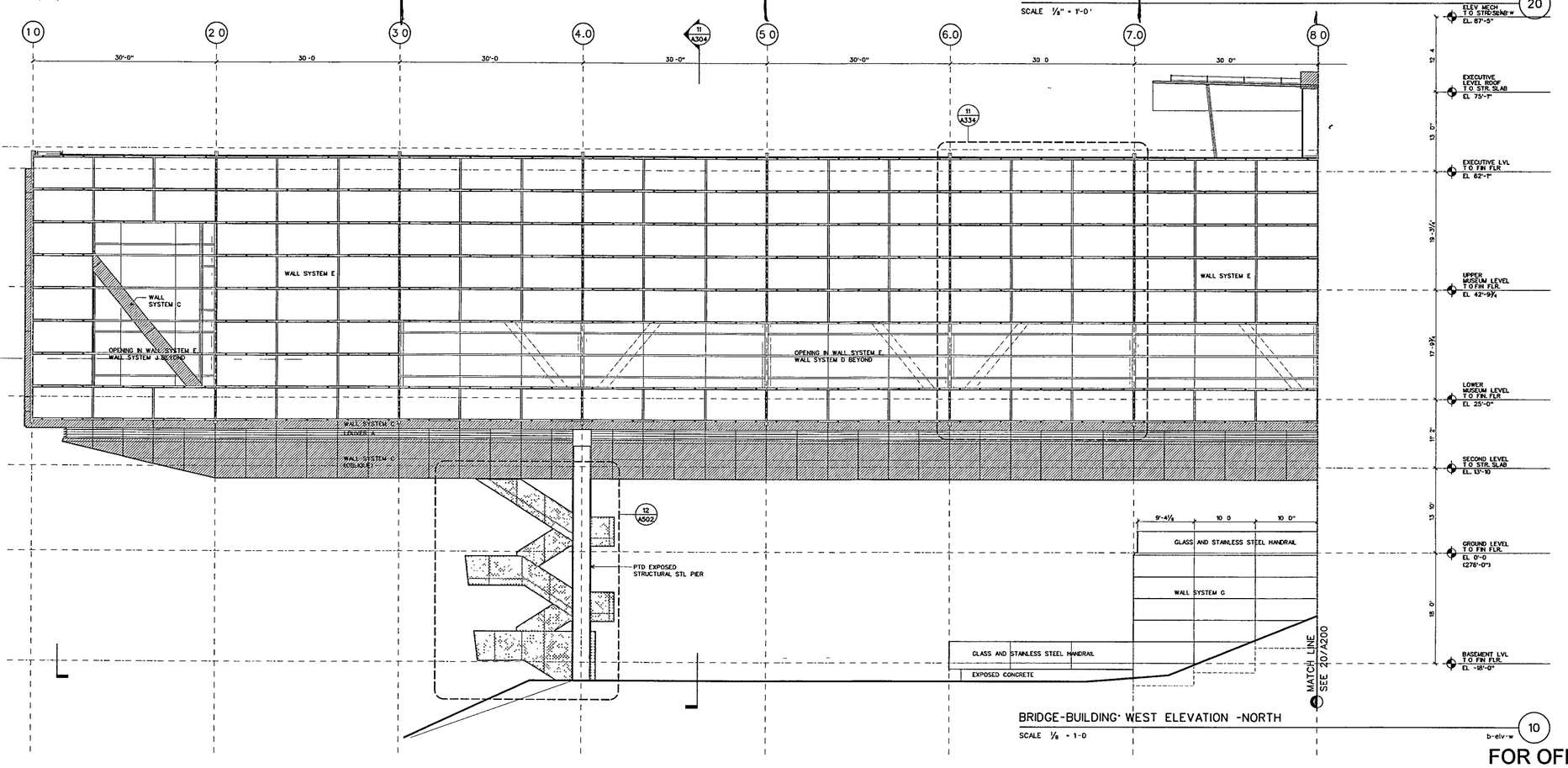

BRIDGE-BUILDING· WEST ELEVATION -NORTH

SCALE 1/8 - 1-0

b-elv-w

10

WILLIAM J CLINTON PRESIDENTIAL CENTER

LITTLE ROCK, ARKANSAS

Architect

POLSHEK PARTNERSHIP LLP
320 West 13th Street
New York, New York 10014
212 807 7171

Coordinating Architects

POLK STANLEY YEARY ARCHITECTS Ltd
700 South Schiller Street
Little Rock, Arkansas 72201
501.378.0878

WITSELL EVANS RASCO
901 West Third Street
Little Rock, Arkansas 72201
501 374 5300

WOODS CARADINE ARCHITECTS
2200 South Main Street
Little Rock Arkansas 72206
501 374 4060

Landscape Architects

HARGREAVES ASSOCIATES
118 Magazine Street
Cambridge, Massachusettes 02139
617 661 0070

LANDSCAPE ARCHITECTURE, Inc
2300 Cottondale Lane Suite 202
Little Rock, Arkansas 72202
501 374 5610

Structural Engineer

LESLIE E ROBERTSON ASSOC , RLLP
30 Broad Street, 47th Floor
New York, New York 10004
212.750 9000

MEP Engineers

FLACK + KURTZ Inc.
475 Fifth Avenue
New York, New York 10017
212.532.9600

CROMWELL ARCHITECTS ENGINEERS
101 South Spring Street
Little Rock, Arkansas 72201
501 372.2300

Curtainwall Consultant

R. A. HEINTGES ARCHITECTS
126 Fifth Avenue, 9th Floor
New York, New York 10011
212 652-2966

Seal

Issue	Date
100% Construction Documents	09/27/02
90% Progress Printing	08/30/02
100% Struct./ CD Progress	07/01/02
Bridge Bldg Substructure	06/14/02
100% Steel & Concrete CD	05/15/02
& Architectural CD Progress	
100% Design Development	03/01/02

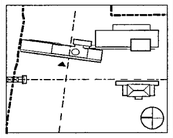

Job No 9908

Scale 1/8" = 1'-0"

Date September 27, 2002

Title

MUSEUM BUILDING WEST ELEVATION

Sheet No

A200

FOR OFFICIAL USE ONLY

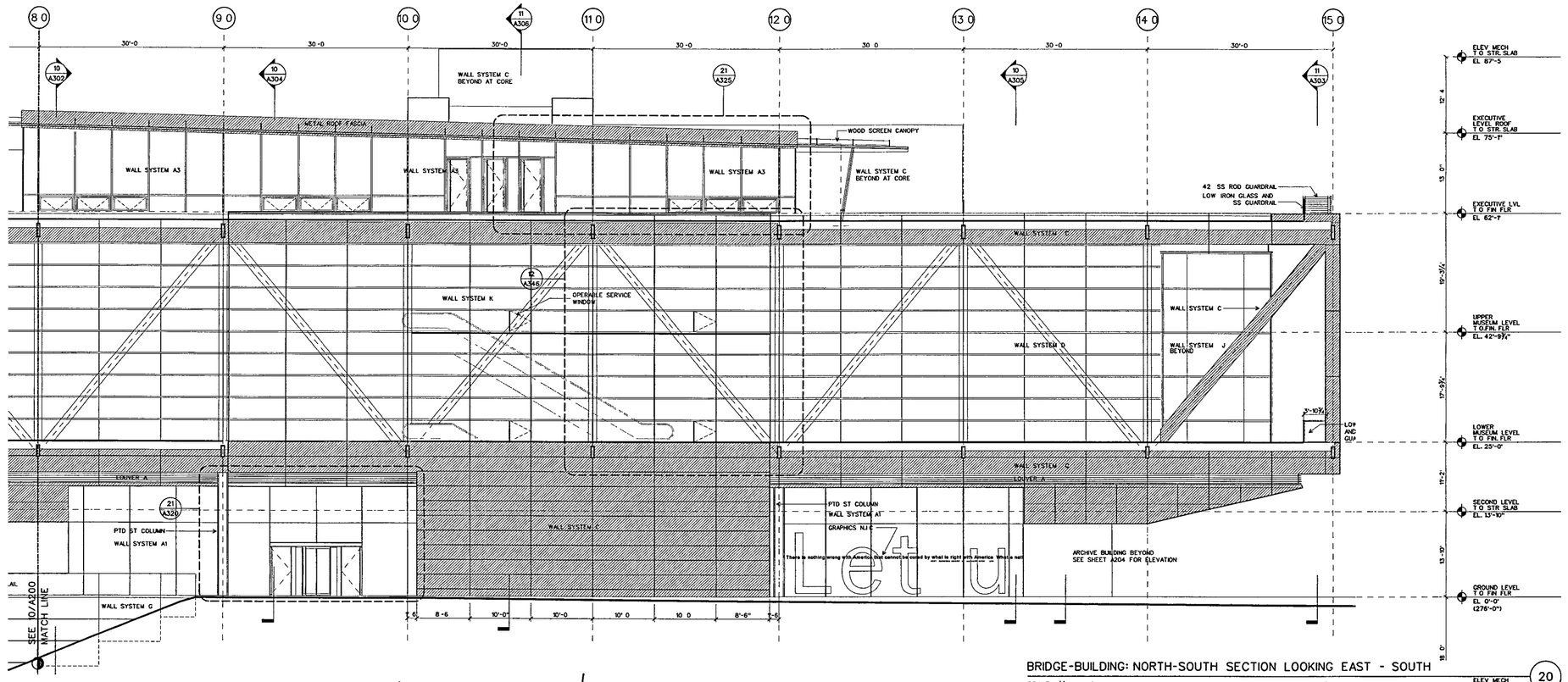

BRIDGE-BUILDING: NORTH-SOUTH SECTION LOOKING EAST - SOUTH

SCALE 1/8" - 1-0"

20

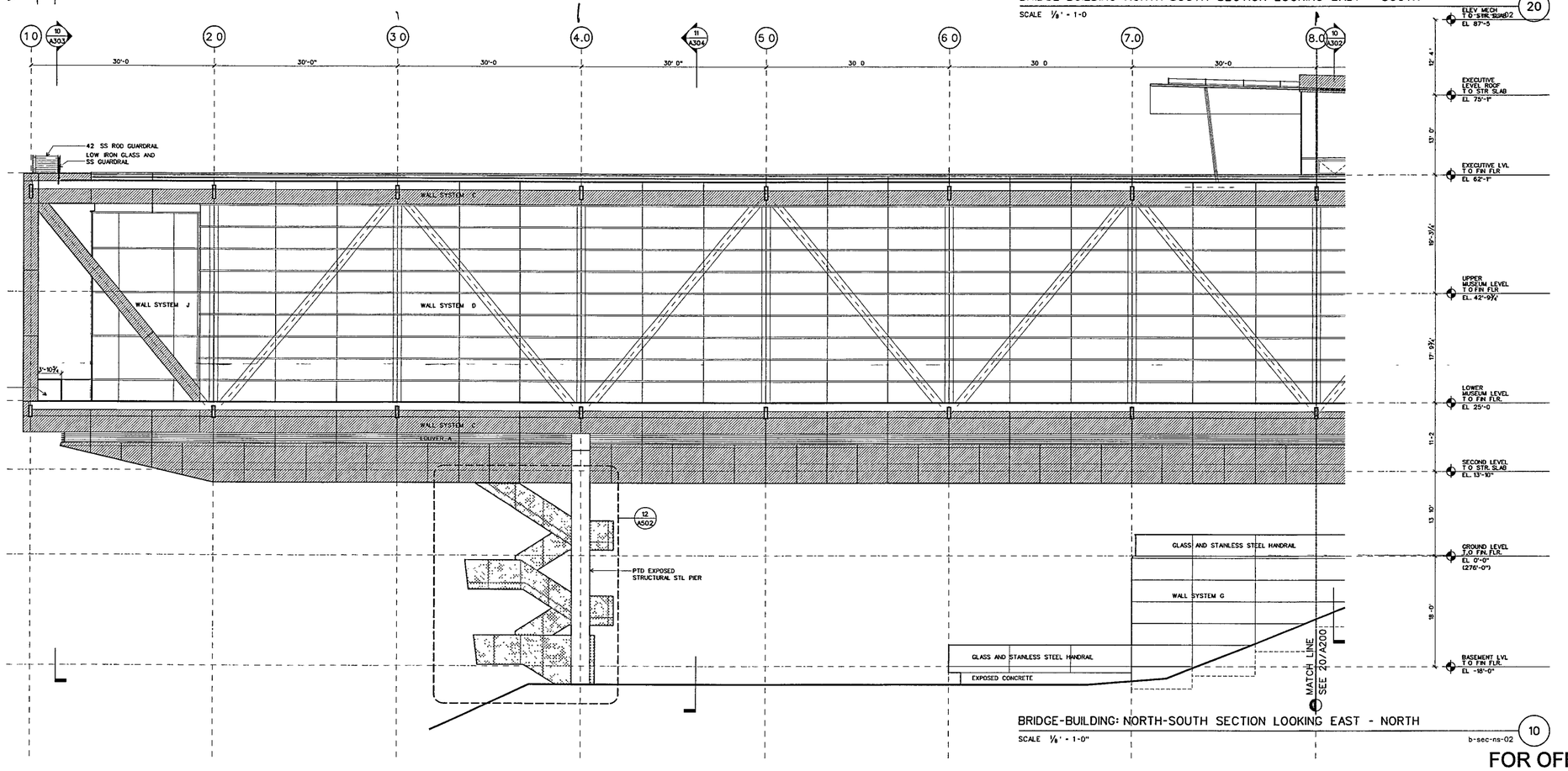

BRIDGE-BUILDING: NORTH-SOUTH SECTION LOOKING EAST - NORTH

SCALE 1/8" - 1-0"

b-sec-ns-02

10

WILLIAM J CLINTON PRESIDENTIAL CENTER

LITTLE ROCK, ARKANSAS

Architect

POLSHEK PARTNERSHIP LLP
320 West 13th Street
New York, New York 10014
212 807 7171

Coordinating Architects

POLK STANLEY YEARY ARCHITECTS Ltd
700 South Schiller Street
Little Rock, Arkansas 72201
501 378 0878

WITSELL EVANS RASCO
901 West Third Street
Little Rock, Arkansas 72201
501 374 5300

WOODS CARADINE ARCHITECTS
2200 South Main Street
Little Rock, Arkansas 72206
501 374 4060

Landscape Architects

HARGREAVES ASSOCIATES
118 Magazine Street
Cambridge, Massachusettes 02139
617 661 0070

LANDSCAPE ARCHITECTURE, Inc.
2300 Cottondale Lane Suite 202
Little Rock, Arkansas 72202
501 374 5810

Structural Engineer

LESLIE E. ROBERTSON ASSOC , RLLP
30 Broad Street, 47th Floor
New York, New York 10004
212.750 9000

MEP Engineers

FLACK + KURTZ Inc.
475 Fifth Avenue
New York, New York 10017
212.532 9600

CROMWELL ARCHITECTS ENGINEERS
101 South Spring Street
Little Rock, Arkansas 72201
501.372.2900

Curtainwall Consultant

R A. HEINTGES ARCHITECTS
126 Fifth Avenue, 9th Floor
New York, New York 10011
212.652-2966

Seal

RICHARD OLCOTT
REGISTERED ARCHITECT
3405
ARKANSAS

Issue	Date
100% Construction Documents	09/27/02
90% Progress Printing	08/30/02
100% Struct / CD Progress	07/01/02
100% Steel & Concrete CD & Architectural CD Progress	05/15/02
100% Design Development	03/01/02

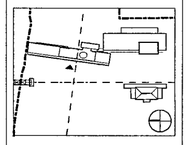

Job No: 9908

Scale: 1/8" = 1'-0"

Date: September 27, 2002

Title: MUSEUM BUILDING WEST ELEVATION

Sheet No: A201

FOR OFFICIAL USE ONLY

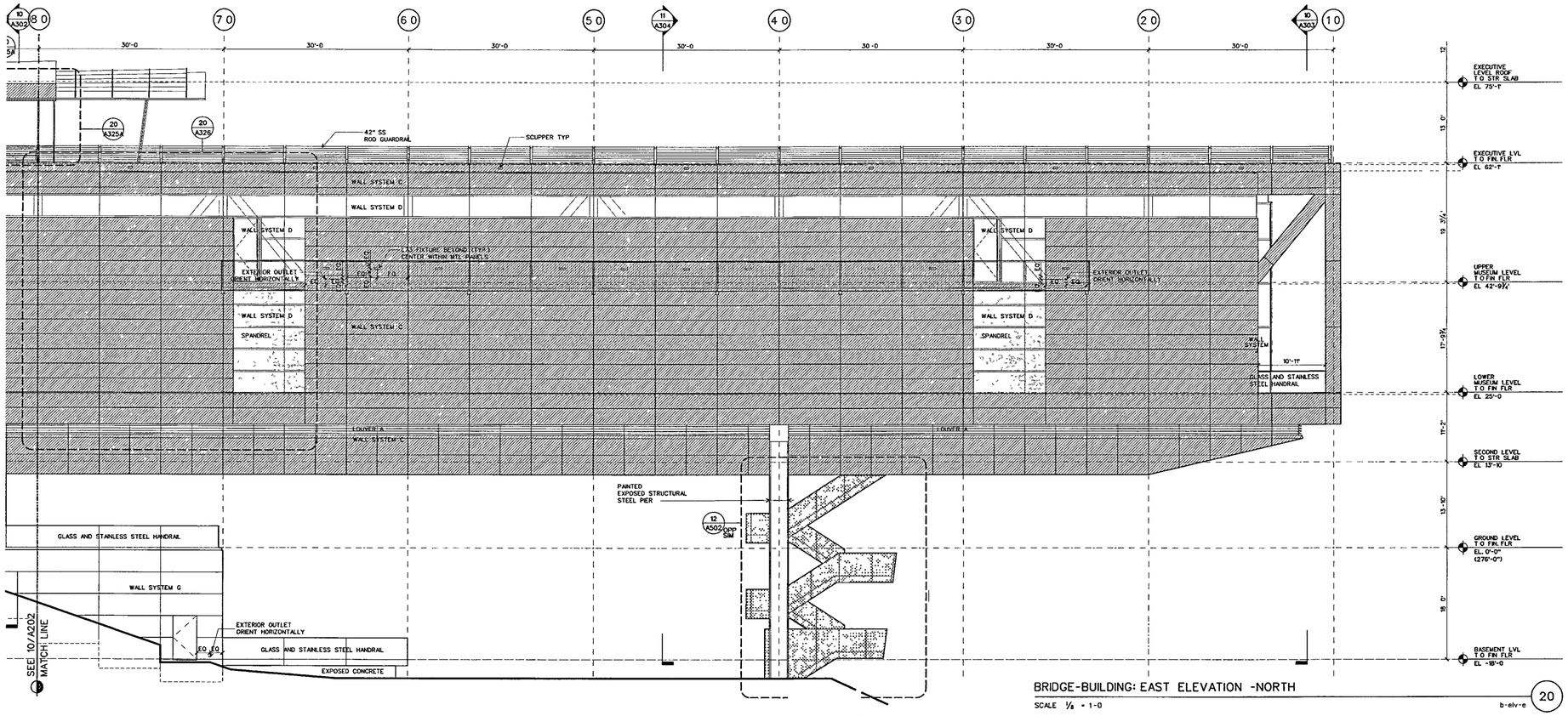

BRIDGE-BUILDING: EAST ELEVATION -NORTH

SCALE 1/8 = 1-0

b-elv-e 20

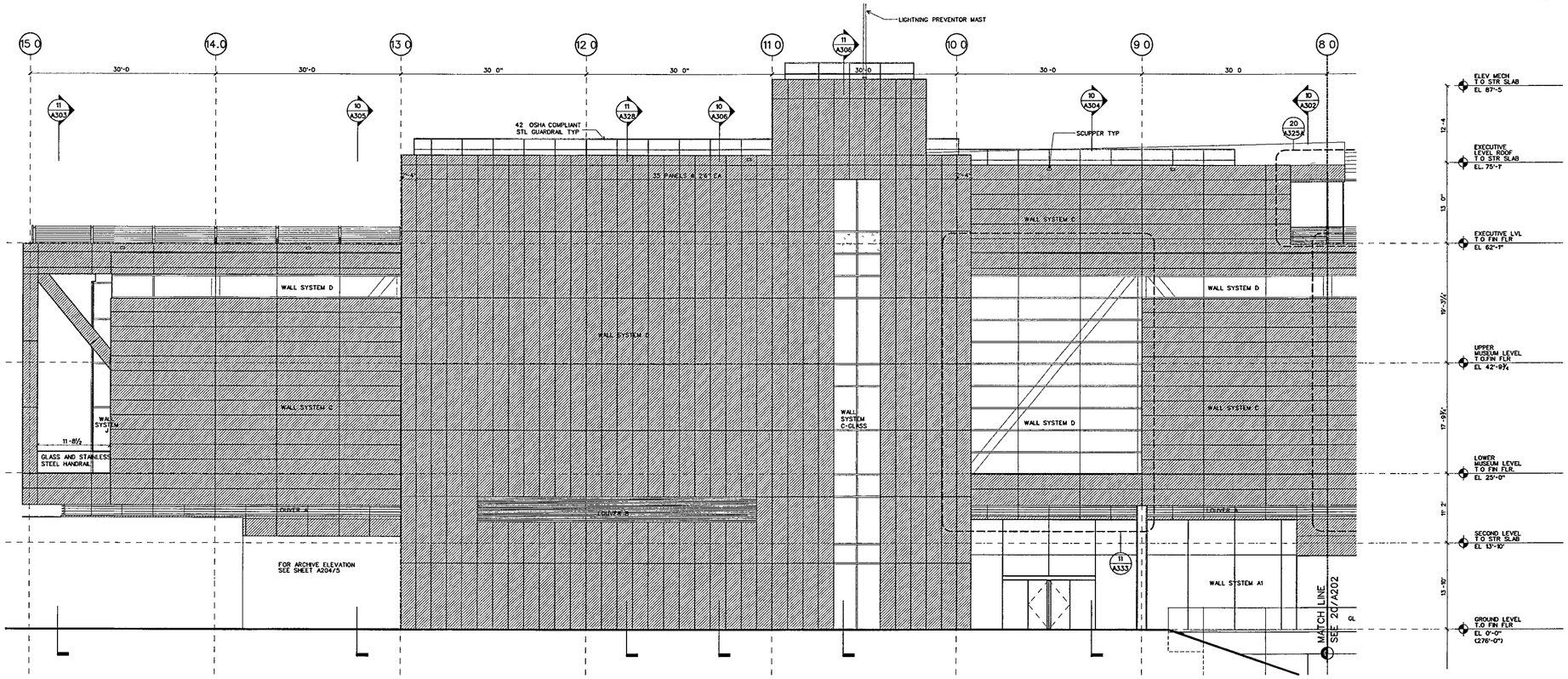

BRIDGE-BUILDING: EAST ELEVATION -SOUTH

SCALE 1/8 = 1-0

b-elv-e 10

WILLIAM J CLINTON PRESIDENTIAL CENTER

LITTLE ROCK, ARKANSAS

Architect

POLSHEK PARTNERSHIP LLP
320 West 13th Street
New York, New York 10014
212 807 7171

Coordinating Architects

POLK STANLEY YEARY ARCHITECTS Ltd
700 South Schiller Street
Little Rock Arkansas 72201
501 378 0878

WITSELL EVANS RASCO
901 West Third Street
Little Rock Arkansas 72201
501 374 5300

WOODS CARADINE ARCHITECTS
2200 South Main Street
Little Rock, Arkansas 72206
501 374.4060

Landscape Architects

HARGREAVES ASSOCIATES
118 Magazine Street
Cambridge Massachusettes 02139
617 661 0070

LANDSCAPE ARCHITECTURE Inc.
2300 Cottondale Lane Suite 202
Little Rock, Arkansas 72202
501 374 5610

Structural Engineer

LESLIE E ROBERTSON ASSOC RLLP
30 Broad Street, 47th Floor
New York, New York 10004
212 750 9000

MEP Engineers

FLACK + KURTZ Inc.
475 Fifth Avenue
New York, New York 10017
212 532.9600

CROMWELL ARCHITECTS ENGINEERS
101 South Spring Street
Little Rock, Arkansas 72201
501 372 2900

Curtainwall Consultant

R A. HEINTGES ARCHITECTS
126 Fifth Avenue, 9th Floor
New York, New York 10011
212 652-2966

Seal

Issue	Date
100% Construction Documents	09/27/02
90% Progress Printing	08/30/02
100% Struct./ CD Progress	07/01/02
Bridge Bldg Substructure	06/14/02
100% Steel & Concrete CD	05/15/02
& Architectural CD Progress	
100% Design Development	03/01/02

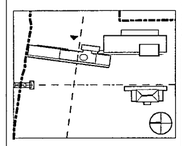

Job No 9908

Scale 1/8" = 1'-0"

Date September 27 2002

Title

MUSEUM BUILDING EAST ELEVATION

Sheet No

A202

FOR OFFICIAL USE ONLY

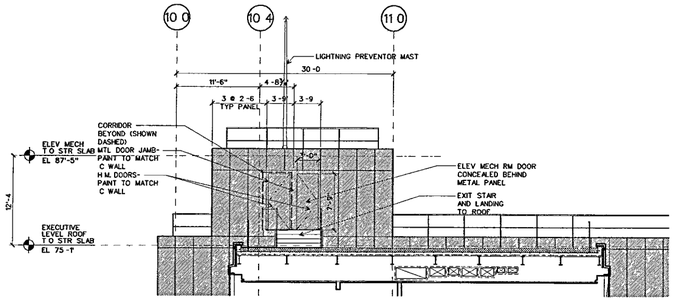

BRIDGE-BUILDING: WEST ELEVATION
OF ELEVATOR MECHANICAL ROOM (PARTIAL)

SCALE 1/8" = 1'-0"

b-sect-ns08 (20)

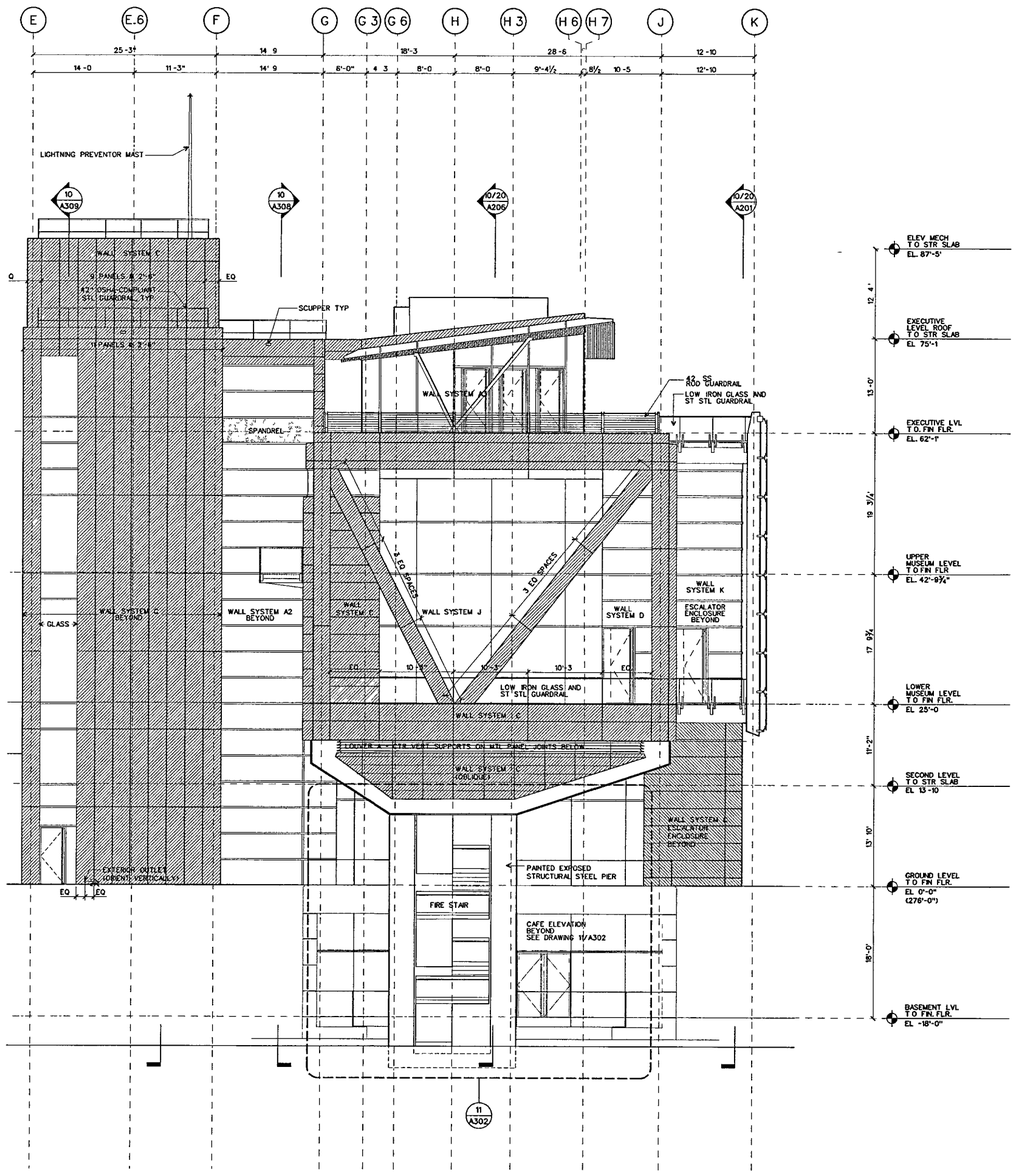

BRIDGE-BUILDING: NORTH ELEVATION

SCALE 1/8" = 1'-0"

b-elv-n (11)

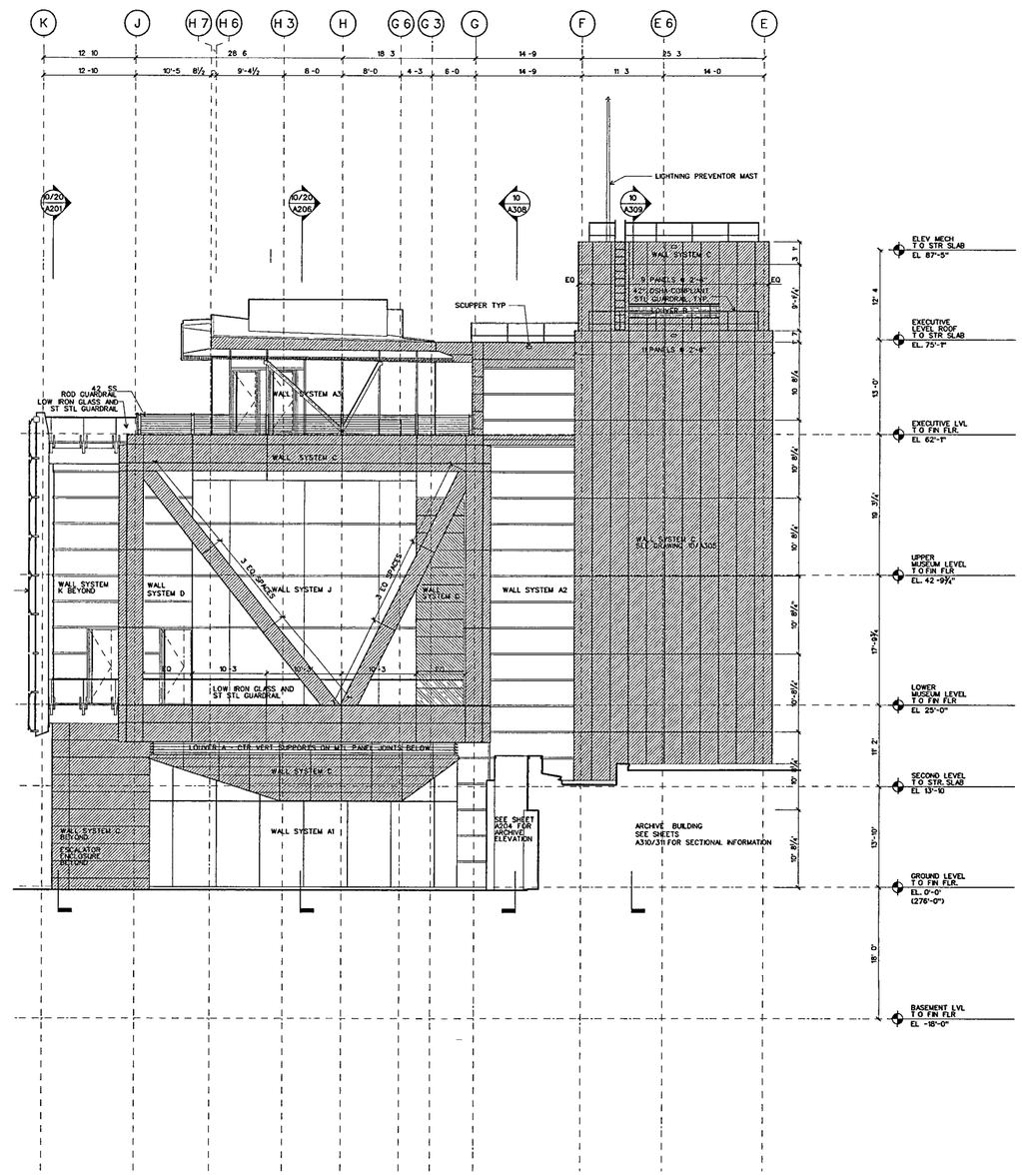

BRIDGE-BUILDING: SOUTH ELEVATION

SCALE 1/8" = 1'-0"

b-elv-s (10)

WILLIAM J CLINTON PRESIDENTIAL CENTER

LITTLE ROCK, ARKANSAS

Architect

POLSHEK PARTNERSHIP LLP
320 West 13th Street
New York, New York 10014
212 807 7171

Coordinating Architects

POLK STANLEY YEARY ARCHITECTS Ltd
700 South Schiller Street
Little Rock, Arkansas 72201
501 378 0878

WITSELL EVANS RASCO
901 West Third Street
Little Rock, Arkansas 72201
501 374 5300

WOODS CARADINE ARCHITECTS
2200 South Main Street
Little Rock, Arkansas 72206
501 374 4060

Landscape Architects

HARGREAVES ASSOCIATES
118 Magazine Street
Cambridge Massachusettes 02139
617 661 0070

LANDSCAPE ARCHITECTURE Inc.
2300 Cottondale Lane Suite 202
Little Rock, Arkansas 72202
501 374 5610

Structural Engineer

LESLIE E ROBERTSON ASSOC RLLP
30 Broad Street, 47th Floor
New York, New York 10004
212.750 9000

MEP Engineers

FLACK + KURTZ Inc
475 Fifth Avenue
New York, New York 10017
212.532 9600

CROMWELL ARCHITECTS ENGINEERS
101 South Spring Street
Little Rock, Arkansas 72201
501 372 2900

Curtainwall Consultant

R A. HEINTGES ARCHITECTS
126 Fifth Avenue, 9th Floor
New York, New York 10011
212.652-2966

Seal

RICHARD OLSEN REGISTERED ARCHITECT 3405 ARKANSAS

Issue	Date
100% Construction Documents	09/27/02
90% Progress Printing	08/30/02
100% Struct./ CD Progress	07/01/02
Bridge Bldg Substructure	06/14/02
100% Steel & Concrete CD & Architectural CD Progress	05/15/02
100% Design Development	03/01/02

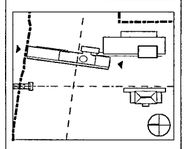

Job No 9908

Scale 1/8" = 1'-0"

Date September 27, 2002

Title

MUSEUM BUILDING NORTH AND SOUTH ELEVATIONS

Sheet No

A203

FOR OFFICIAL USE ONLY

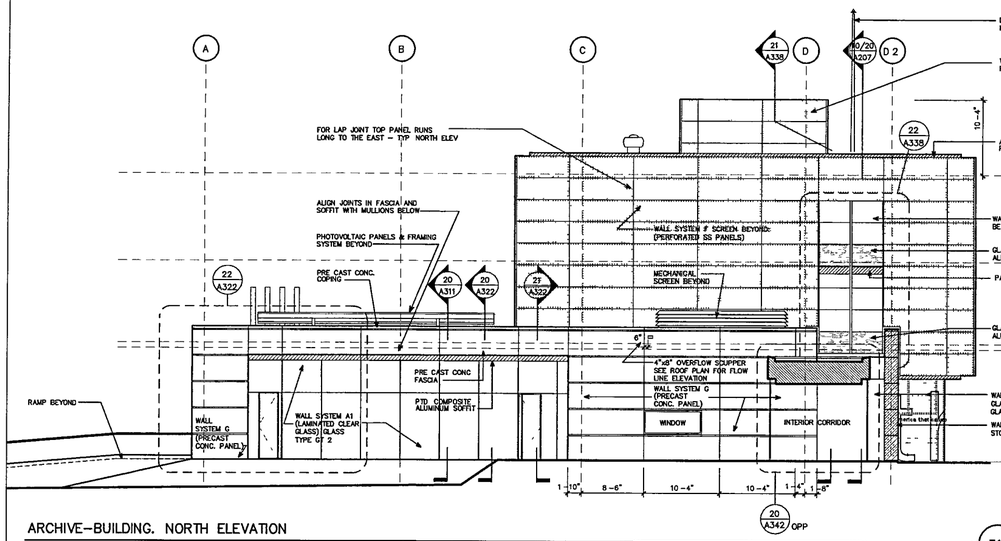

ARCHIVE–BUILDING. NORTH ELEVATION

SCALE. 1/8 " = 1'-0"

31

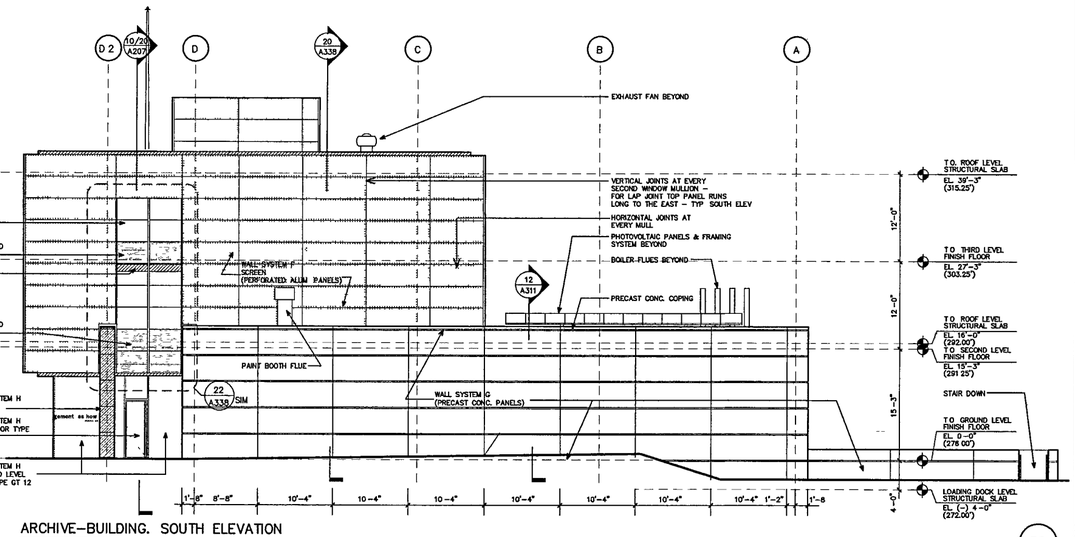

ARCHIVE–BUILDING. SOUTH ELEVATION

SCALE. 1/8 " = 1'-0"

30

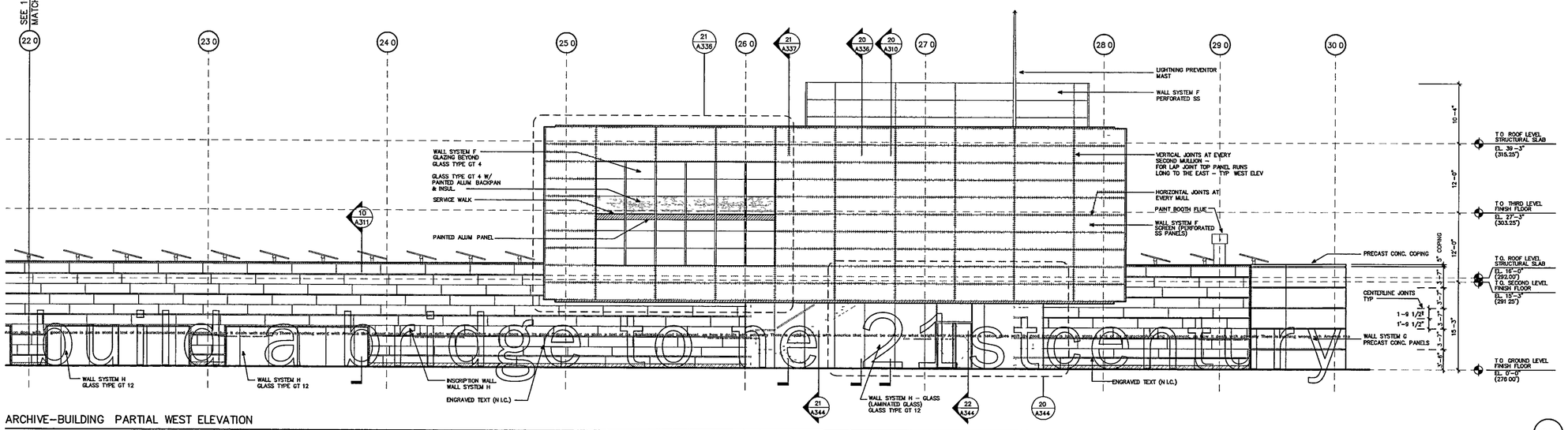

ARCHIVE–BUILDING PARTIAL WEST ELEVATION

SCALE. 1/8 " = 1'-0"

20

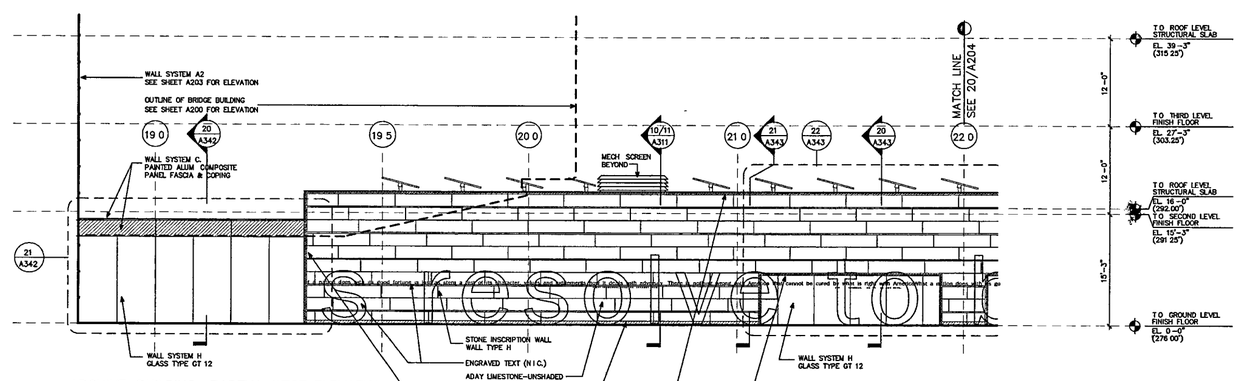

ARCHIVE–BUILDING. PARTIAL WEST ELEVATION

SCALE. 1/8 " = 1'-0"

10

WILLIAM J. CLINTON PRESIDENTIAL CENTER

LITTLE ROCK, ARKANSAS

Architect

POLSHEK PARTNERSHIP LLP
320 West 13th Street
New York, New York 10014
212.807 7171

Coordinating Architects

POLK STANLEY YEARY ARCHITECTS Ltd
700 South Schiller Street
Little Rock, Arkansas 72201
501.378 0878

WITSELL EVANS & RASCO
901 West Third Street
Little Rock, Arkansas 72201
501.374.5300

WOODS CARADINE ARCHITECTS
2200 South Main Street
Little Rock, Arkansas 72206
501.374.4060

Landscape Architects

HARGREAVES ASSOCIATES
118 Magazine Street
Cambridge, Massachusettes 02139
617.661.0070

LANDSCAPE ARCHITECTURE, Inc.
2300 Cottondale Lane Suite 202
Little Rock, Arkansas 72202
501.374 5610

Structural Engineer

LESLIE E. ROBERTSON ASSOC., RLLP
30 Broad Street, 47th Floor
New York, New York 10017
212.750 9000

MEP Engineers

FLACK + KURTZ Inc.
475 Fifth Avenue
New York, New York 10017
212.532.9600

CROMWELL ARCHITECTS ENGINEERS
101 South Spring Street
Little Rock, Arkansas 72201
501.372.2900

Curtainwall Consultant

R.A. HEINTGES ARCHITECTS
126 Fifth Avenue, 9th Floor
New York, New York 10011
212.652-2966

Seal

POLK STANLEY YEARY ARCHITECTS CORPORATION REGISTRATION NO. C-136 ARKANSAS

Issue	Date
100% Construction Documents	09/27/02
90% Progress Printing	08/30/02
100% Struct./CD Progress	07/01/02
100% Steel & Concrete CD	
& Architectural CD Progress	05/15/02
100% Design Development	03/01/02

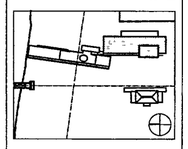

Job No. PPA. 9908 PSY 428D

Scale 1/8" = 1'-0"

Date September 27, 2002

Title **ARCHIVE BUILDING ELEVATIONS**

Sheet No. **A204**

FOR OFFICIAL USE ONLY

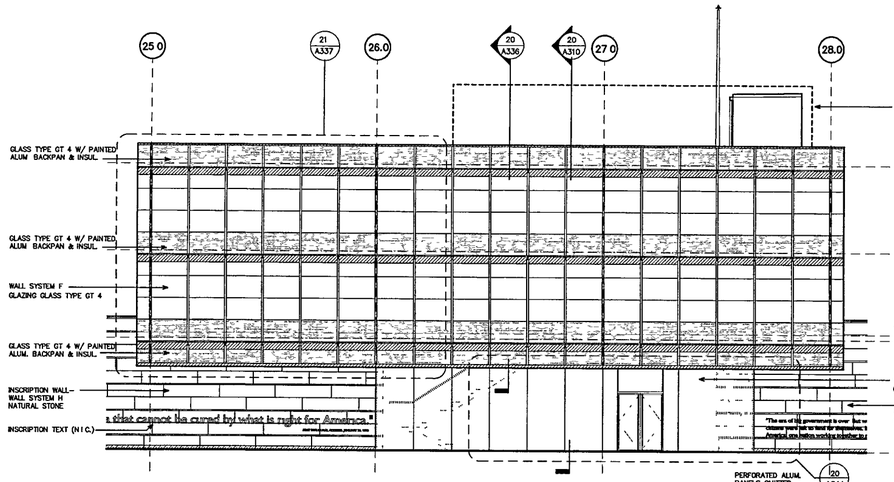

ARCHIVE–BUILDING: WEST CURTAINWALL ELEVATION (32)

SCALE. 1/8 " = 1'–0"

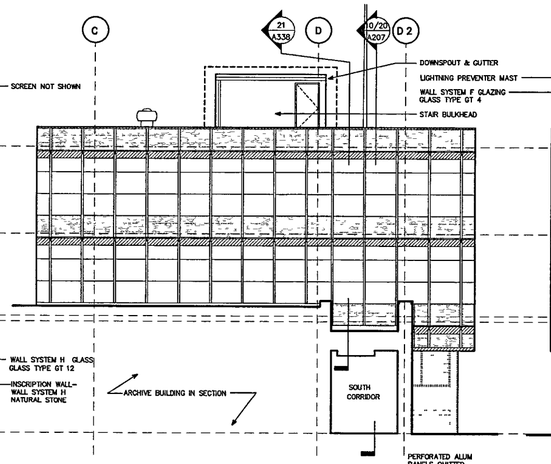

ARCHIVE–BUILDING NORTH CURTAINWALL ELEVATION (31)

SCALE: 1/8 " = 1'–0"

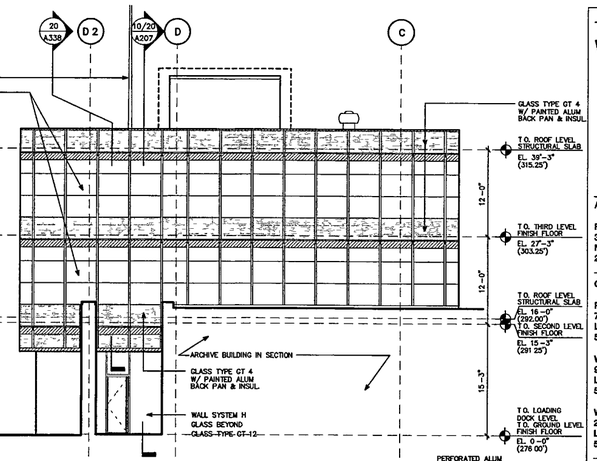

ARCHIVE–BUILDING. SOUTH CURTAINWALL ELEVATION (30)

SCALE. 1/8 " = 1'–0"

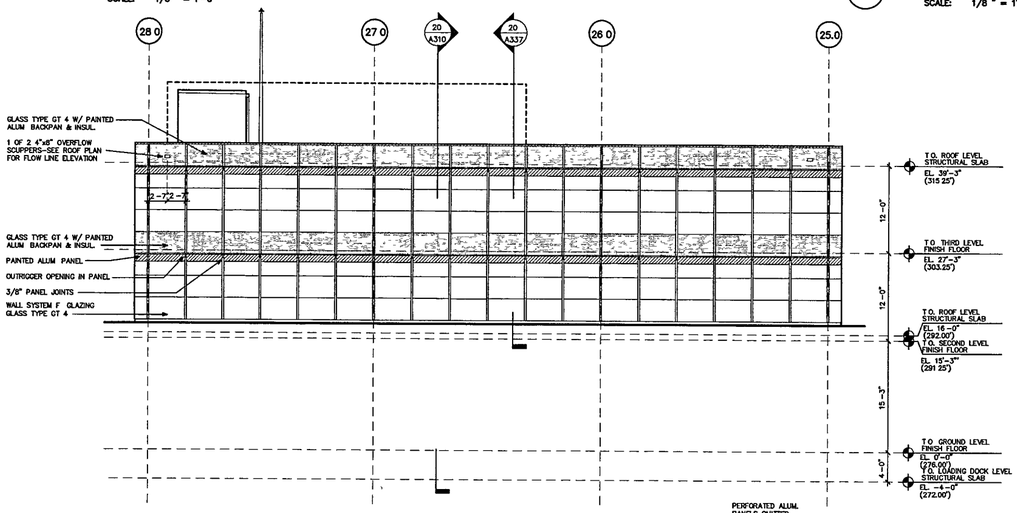

ARCHIVE–BUILDING. EAST CURTAINWALL ELEVATION (22)

SCALE. 1/8 " = 1'–0"

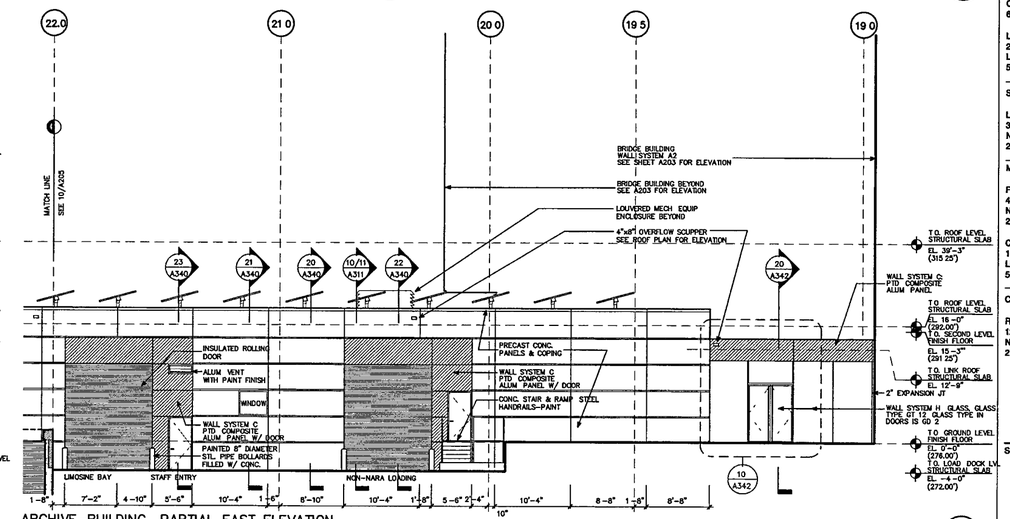

ARCHIVE–BUILDING. PARTIAL EAST ELEVATION (20)

SCALE. 1/8 " = 1'–0"

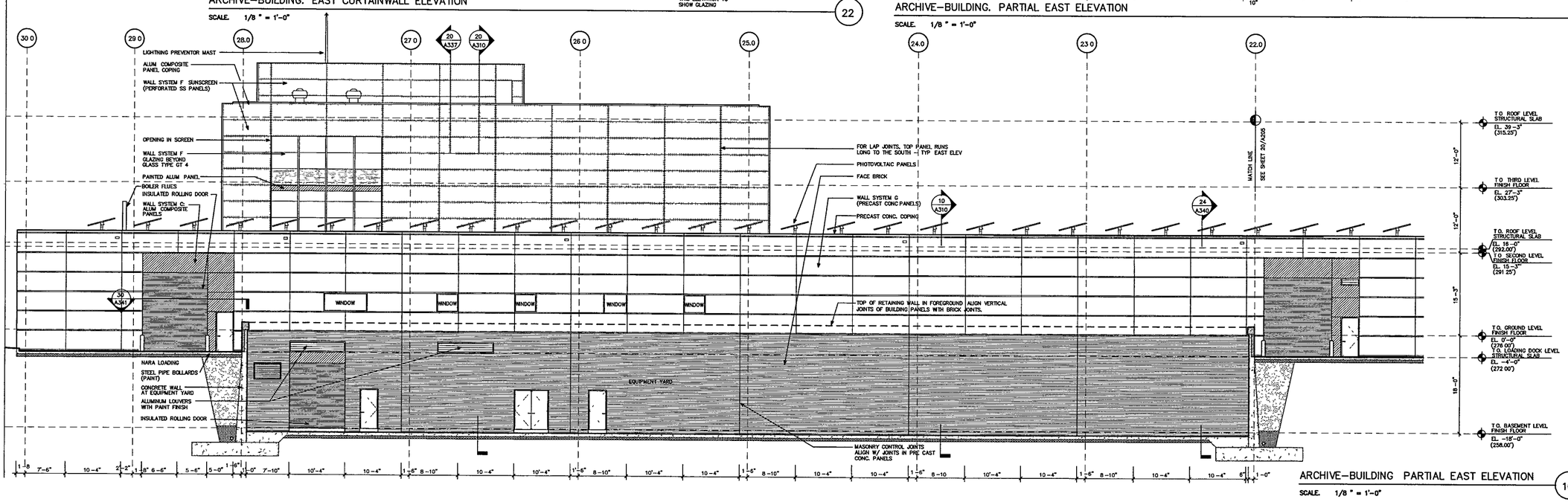

ARCHIVE–BUILDING PARTIAL EAST ELEVATION (10)

SCALE. 1/8 " = 1'–0"

WILLIAM J. CLINTON PRESIDENTIAL CENTER

LITTLE ROCK, ARKANSAS

Architect

POLSHEK PARTNERSHIP LLP
320 West 13th Street
New York, New York 10014
212.807 7171

Coordinating Architects

POLK STANLEY YEARY ARCHITECTS Ltd
700 South Schiller Street
Little Rock, Arkansas 72201
501.378 0878

WITSELL EVANS & RASCO
901 West Third Street
Little Rock, Arkansas 72201
501.374.5300

WOODS CARADINE ARCHITECTS
2200 South Main Street
Little Rock, Arkansas 72206
501.374 4060

Landscape Architects

HARGREAVES ASSOCIATES
118 Magazine Street
Cambridge, Massachusettes 02139
617.661 0070

LANDSCAPE ARCHITECTURE, Inc.
2300 Cottondale Lane Suite 202
Little Rock, Arkansas 72202
501.374.5610

Structural Engineer

LESLIE E. ROBERTSON ASSOC., RLLP
30 Broad Street, 47th Floor
New York, New York 10017
212.750.9000

MEP Engineers

FLACK + KURTZ Inc.
475 Fifth Avenue
New York, New York 10017
212.532.9600

CROMWELL ARCHITECTS ENGINEERS
101 South Spring Street
Little Rock, Arkansas 72201
501.372.2900

Curtainwall Consultant

R.A. HEINTGES ARCHITECTS
126 Fifth Avenue, 9th Floor
New York, New York 10011
212.632-2966

Seal

Issue	Date
100% Construction Documents	09/27/02
90% Progress Printing	08/30/02
100% Struct./CD Progress	07/01/02
100% Steel & Concrete CD	
& Architectural CD Progress	05/15/02
100% Design Development	03/01/02

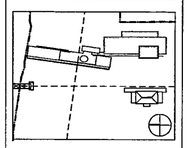

Job No.	PPA. 9908 PSY 428D
Scale	1/8" = 1'-0"
Date	September 27, 2002
Title	ARCHIVE BUILDING ELEVATIONS
Sheet No	A205

FOR OFFICIAL USE ONLY

THURSDAY, SEPTEMBER 26, 2002

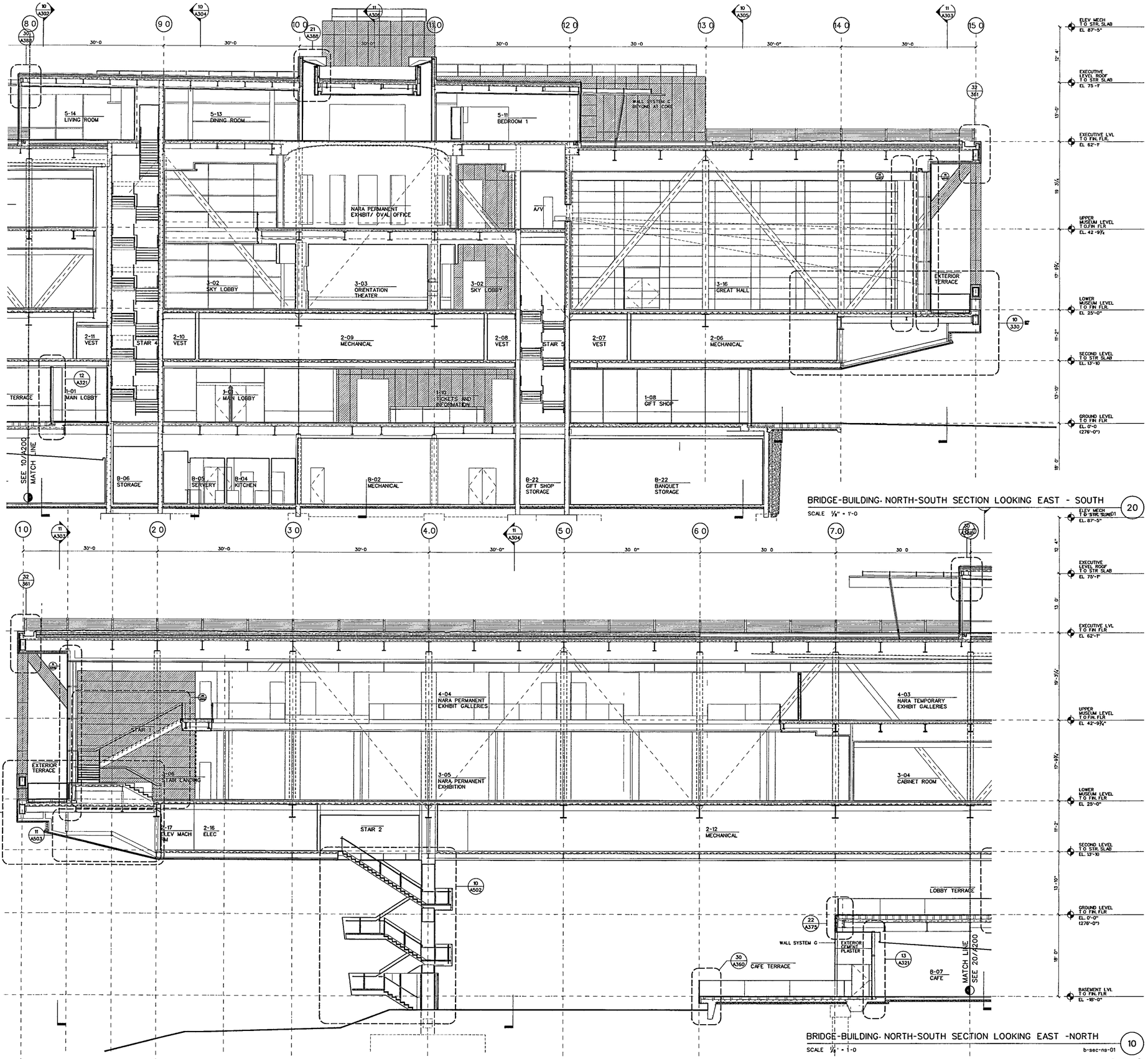

WILLIAM J CLINTON PRESIDENTIAL CENTER

LITTLE ROCK, ARKANSAS

Architect

POLSHEK PARTNERSHIP LLP
320 West 13th Street
New York New York 10014
212 807 7171

Coordinating Architects

POLK STANLEY YEARY ARCHITECTS Ltd
700 South Schiller Street
Little Rock Arkansas 72201
501 378 0878

WITSELL EVANS RASCO
901 West Third Street
Little Rock, Arkansas 72201
501 374 5300

WOODS CARADINE ARCHITECTS
2200 South Main Street
Little Rock Arkansas 72206
501 374 4060

Landscape Architects

HARGREAVES ASSOCIATES
118 Magazine Street
Cambridge Massachusettes 02139
617 661 0070

LANDSCAPE ARCHITECTURE Inc.
2300 Cottondale Lane Suite 202
Little Rock, Arkansas 72202
501 374 5610

Structural Engineer

LESLIE E. ROBERTSON ASSOC , RLLP
30 Broad Street, 47th Floor
New York, New York 10004
212.750 9000

MEP Engineers

FLACK + KURTZ Inc.
475 Fifth Avenue
New York, New York 10017
212.532.9600

CROMWELL ARCHITECTS ENGINEERS
101 South Spring Street
Little Rock, Arkansas 72201
501 372.2900

Curtainwall Consultant

R. A. HEINTGES ARCHITECTS
126 Fifth Avenue 9th Floor
New York, New York 10011
212 652-2966

Seal

RICHARD OLSON REGISTERED ARCHITECT 3405 ARKANSAS

Issue	Date
100% Construction Documents	09/27/02
90% Progress Printing	08/30/02
100% Struct./ CD Progress	07/01/02
Bridge Bldg Substructure	06/14/02
100% Steel & Concrete CD & Architectural CD Progress	05/15/02
100% Design Development	03/01/02

Job No 9908

Scale 1/8" = 1'-0"

Date September 27 2002

Title MUSEUM BUILDING LONGITUDINAL SECTION

Sheet No A206

FOR OFFICIAL USE ONLY

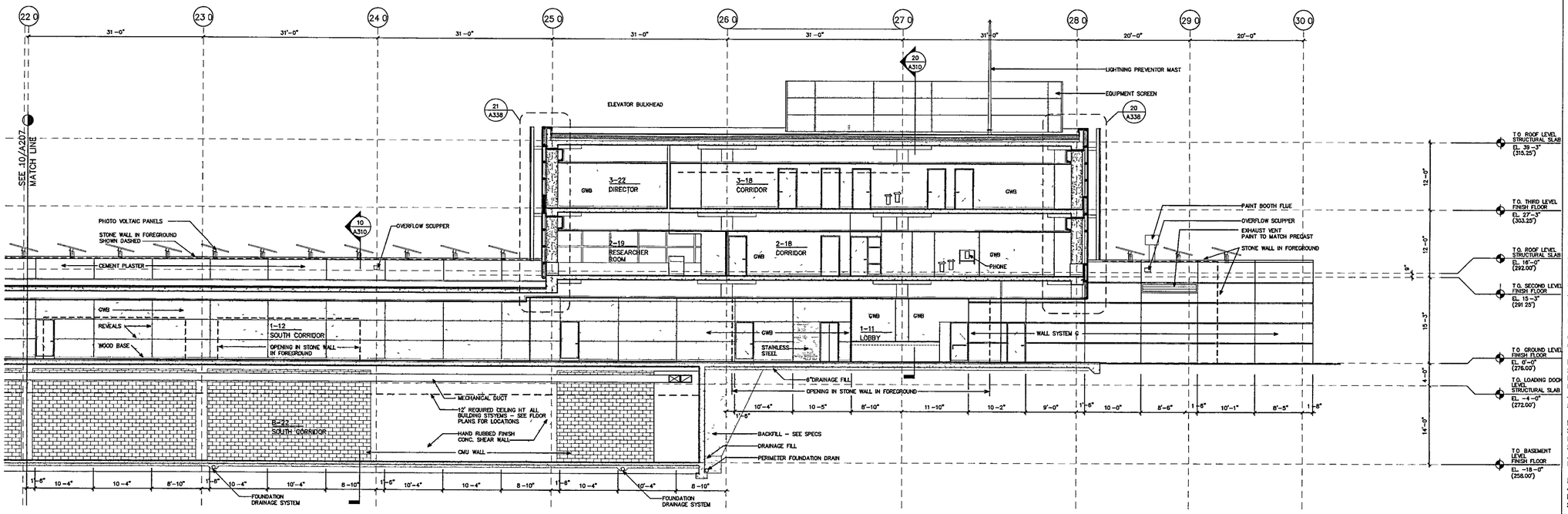

ARCHIVE-BUILDING NORTH-SOUTH SECTION LOOKING EAST (NORTH)

SCALE 1/8" = 1'-0"

20

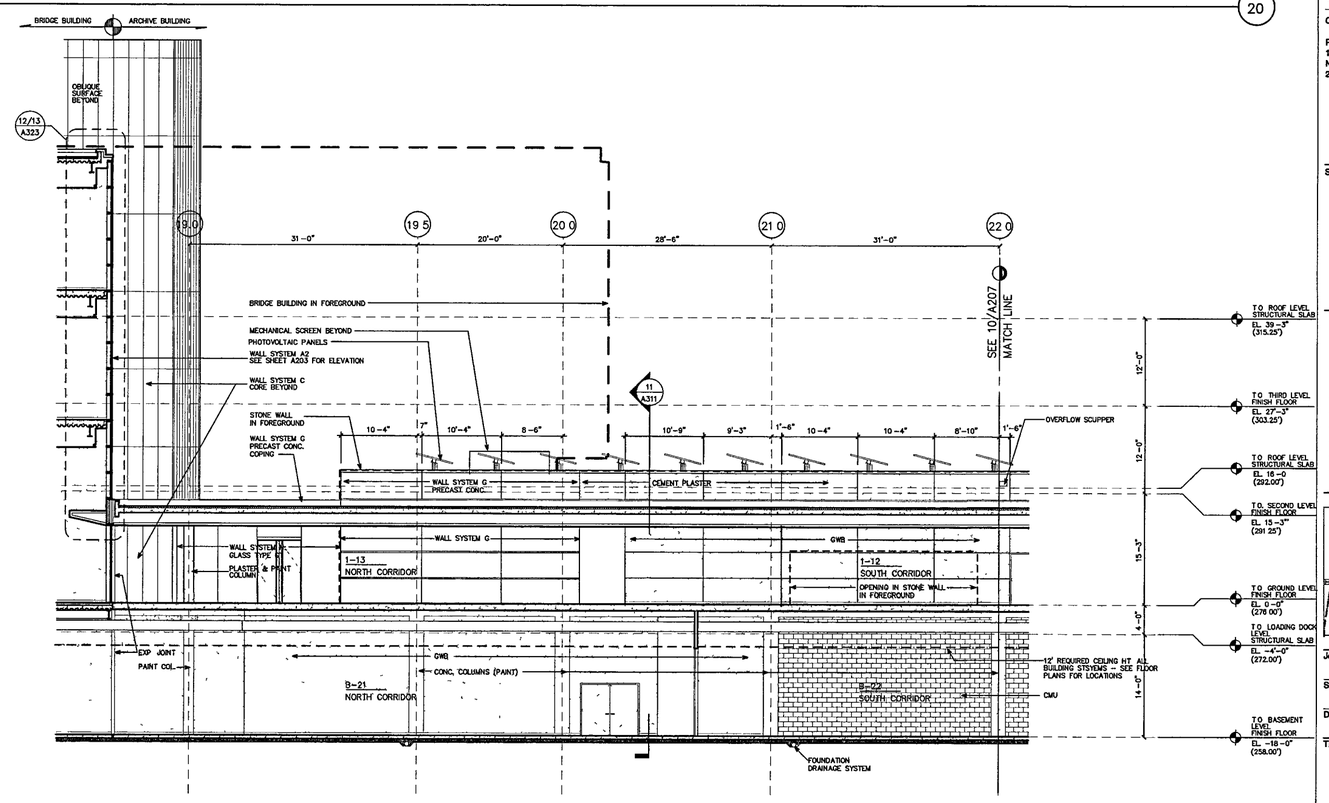

ARCHIVE-BUILDING. NORTH-SOUTH SECTION LOOKING EAST (SOUTH)

SCALE 1/8" = 1'-0"

10

WILLIAM J. CLINTON PRESIDENTIAL CENTER

LITTLE ROCK, ARKANSAS

Architect

POLSHEK PARTNERSHIP LLP
320 West 13th Street
New York, New York 10014
212.807.7171

Coordinating Architects

POLK STANLEY YEARY ARCHITECTS Ltd
700 South Schiller Street
Little Rock, Arkansas 72201
501.378.0878

WITSELL EVANS & RASCO
901 West Third Street
Little Rock, Arkansas 72201
501.374.5300

WOODS CARADINE ARCHITECTS
2200 South Main Street
Little Rock, Arkansas 72206
501.374.4060

Landscape Architects

HARGREAVES ASSOCIATES
118 Magazine Street
Cambridge, Massachusettes 02139
617.661.0070

LANDSCAPE ARCHITECTURE, Inc.
2300 Cottondale Lane Suite 202
Little Rock, Arkansas 72202
501.374.5610

Structural Engineer

LESLIE E. ROBERTSON ASSOC., RLLP
30 Broad Street, 47th Floor
New York, New York 10017
212.750.9000

MEP Engineers

FLACK + KURTZ Inc.
475 Fifth Avenue
New York, New York 10017
212.532.9600

CROMWELL ARCHITECTS ENGINEERS
101 South Spring Street
Little Rock, Arkansas 72201
501.372.2900

Curtainwall Consultant

R.A. HEINTGES ARCHITECTS
126 Fifth Avenue, 9th Floor
New York, New York 10011
212 652-2968

Seal

POLK STANLEY YEARY ARCHITECTS LTD
REGISTERED ARCHITECT
C-136
ARKANSAS

Issue	Date
100% Construction Documents	09/27/02
90% Progress Printing	08/30/02
100% Struct./CD Progress	07/01/02
100% Steel & Concrete CD	
& Architectural CD Progress	05/15/02
100% Design Development	03/01/02

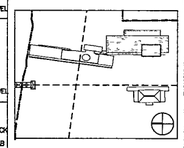

Job No	PPA. 9908 PSY 426D
Scale	1/4" = 1'-0"
Date	September 27, 2002

Title

ARCHIVE BUILDING SECTIONS

Sheet No.

A207

FOR OFFICIAL USE ONLY

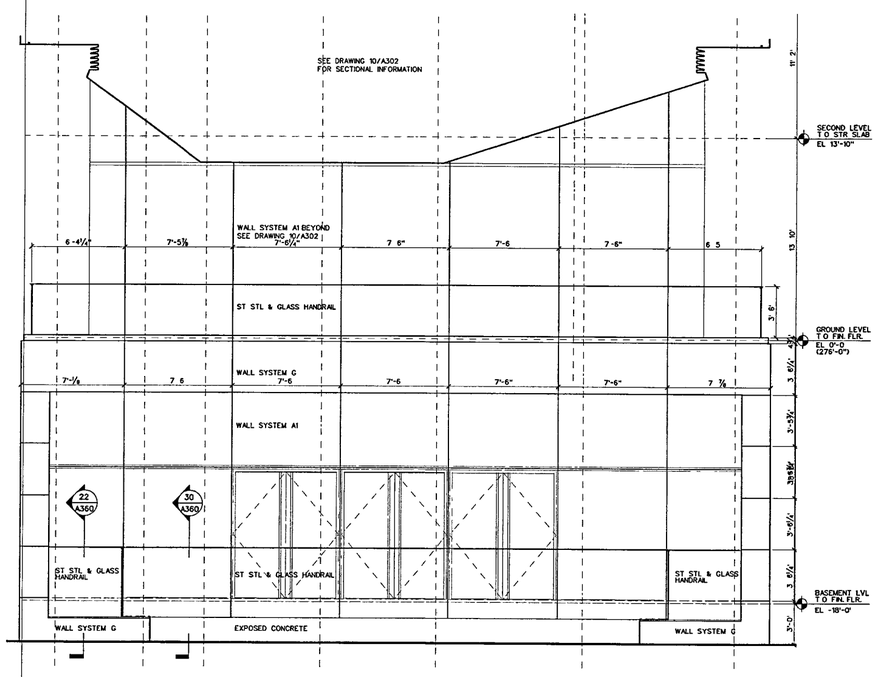

BRIDGE BUILDING: DETAIL SECTION EAST-WEST LOOKING SOUTH AT CAFE ELEVATION

SCALE ¼ = 1'-0"

B-SECT-EW08 (11)

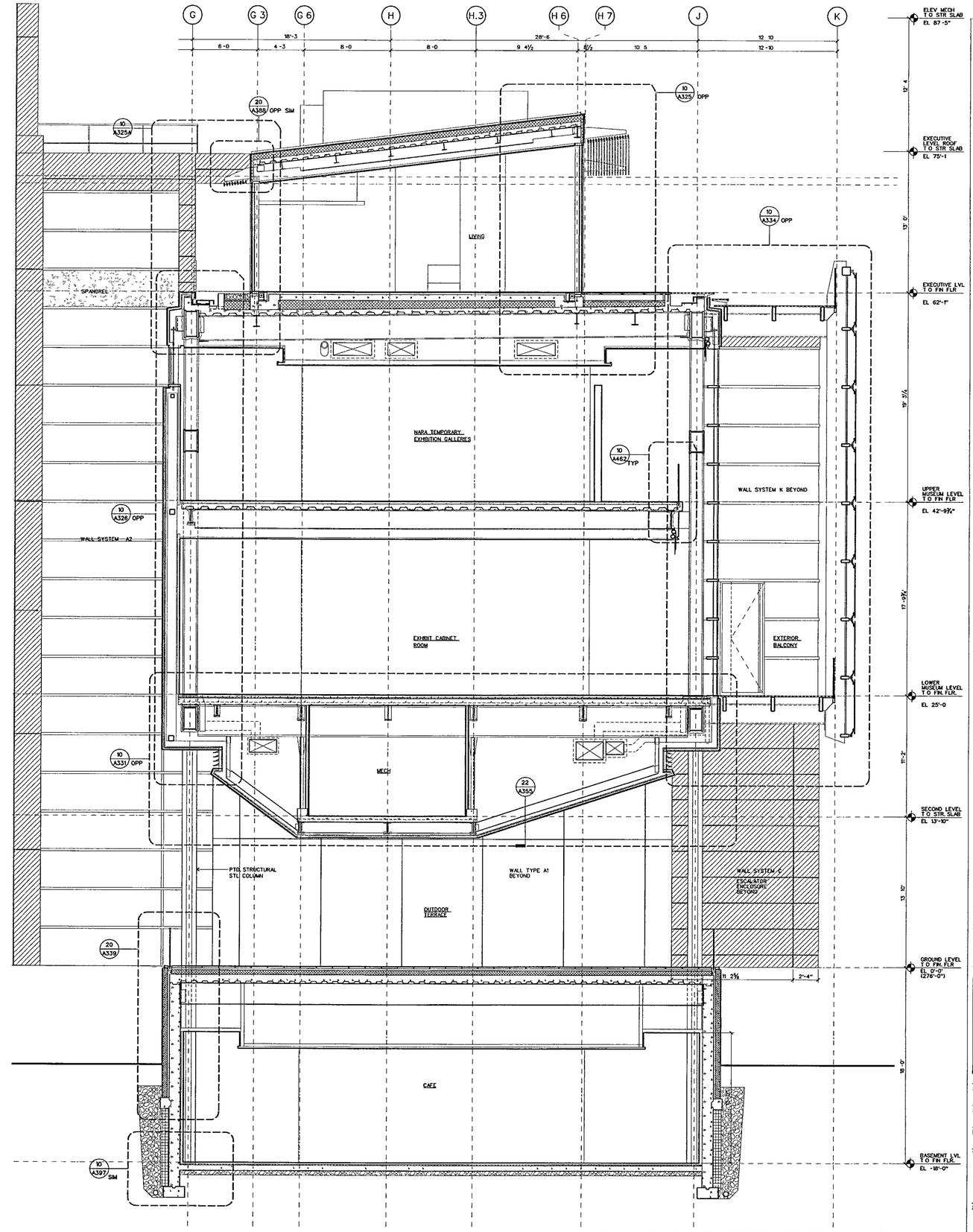

BRIDGE BUILDING: DETAIL SECTION EAST-WEST LOOKING SOUTH THROUGH TEMPORARY GALLERY

SCALE ¼' = 1'-0

B-SECT-EW02 (10)

WILLIAM J CLINTON PRESIDENTIAL CENTER

LITTLE ROCK, ARKANSAS

Architect

POLSHEK PARTNERSHIP LLP
320 West 13th Street
New York New York 10014
212 807 7171

Coordinating Architects

POLK STANLEY YEARY ARCHITECTS Ltd
700 South Schiller Street
Little Rock Arkansas 72201
501 378 0878

WITSELL EVANS RASCO
901 West Third Street
Little Rock Arkansas 72201
501 374 5300

WOODS CARADINE ARCHITECTS
2200 South Main Street
Little Rock, Arkansas 72206
501 374 4060

Landscape Architects

HARGREAVES ASSOCIATES
118 Magazine Street
Cambridge, Massachusettes 02139
617 661 0070

LANDSCAPE ARCHITECTURE Inc.
2300 Cottondale Lane Suite 202
Little Rock, Arkansas 72202
501 374 5610

Structural Engineer

LESLIE E. ROBERTSON ASSOC RLLP
30 Broad Street, 47th Floor
New York, New York 10004
212 750 9000

MEP Engineers

FLACK + KURTZ Inc.
475 Fifth Avenue
New York, New York 10017
212 532 9600

CROMWELL ARCHITECTS ENGINEERS
101 South Spring Street
Little Rock, Arkansas 72201
501 372 2900

Curtainwall Consultant

R A. HEINTGES ARCHITECTS
126 Fifth Avenue, 9th Floor
New York New York 10011
212 652-2966

Seal

RICHARD OLCOTT REGISTERED ARCHITECT 3405 ARKANSAS

Issue	Date
100% Construction Documents	09/27/02
90% Progress Printing	08/30/02
100% Struct./ CD Progress	07/01/02
Bridge Bldg Substructure	06/14/02
100% Steel & Concrete CD	05/15/02
& Architectural CD Progress	
100% Design Development	03/01/02

Job No 9908

Scale 1/4" = 1'-0"

Date September 27, 2002

Title MUSEUM BUILDING SECTIONS

Sheet No A302

FOR OFFICIAL USE ONLY

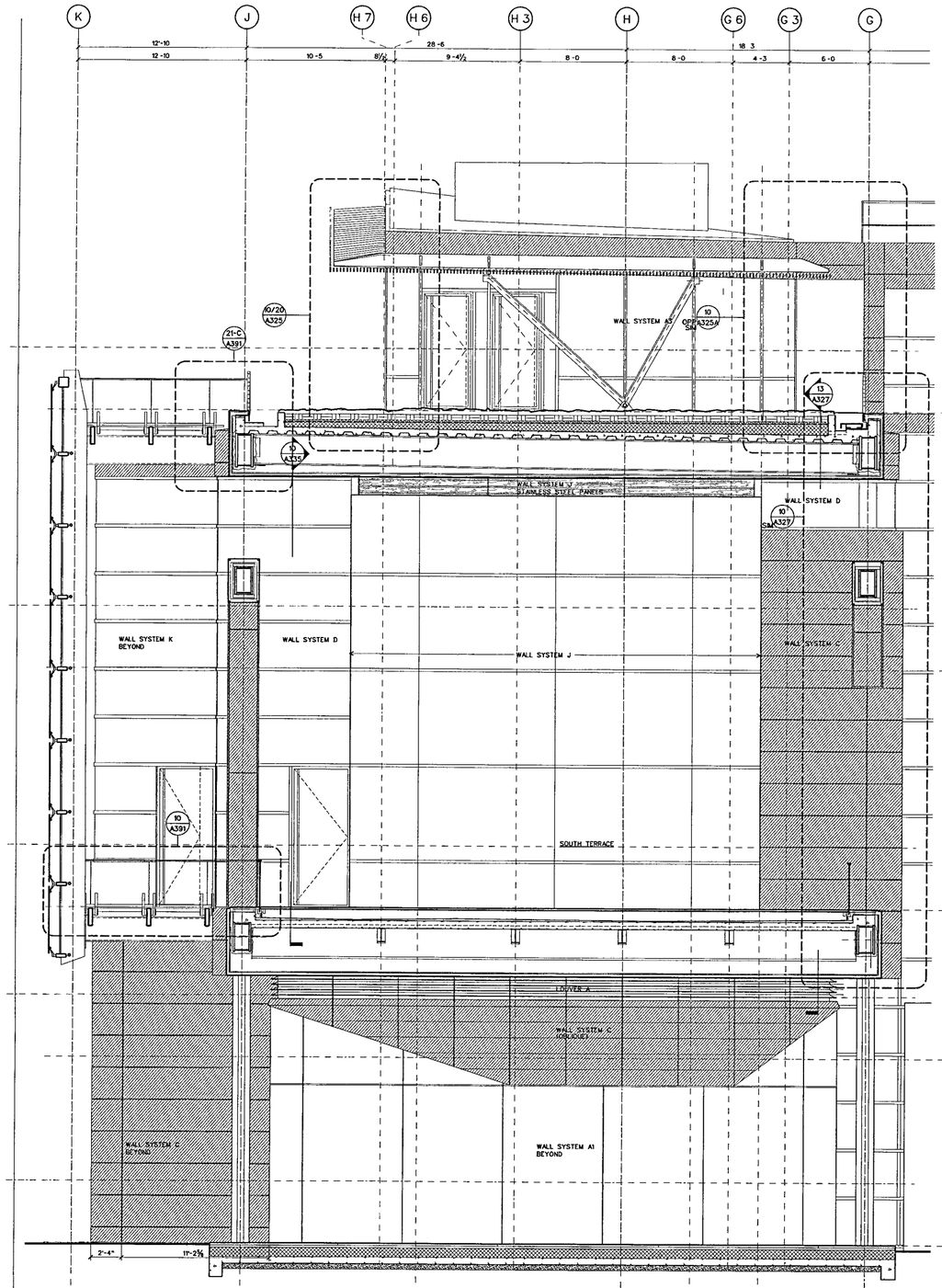

BRIDGE BUILDING: DETAIL SECTION EAST-WEST LOOKING NORTH THROUGH SOUTH END

SCALE ¼" = 1'-0"

B-SECT-EW07 (11)

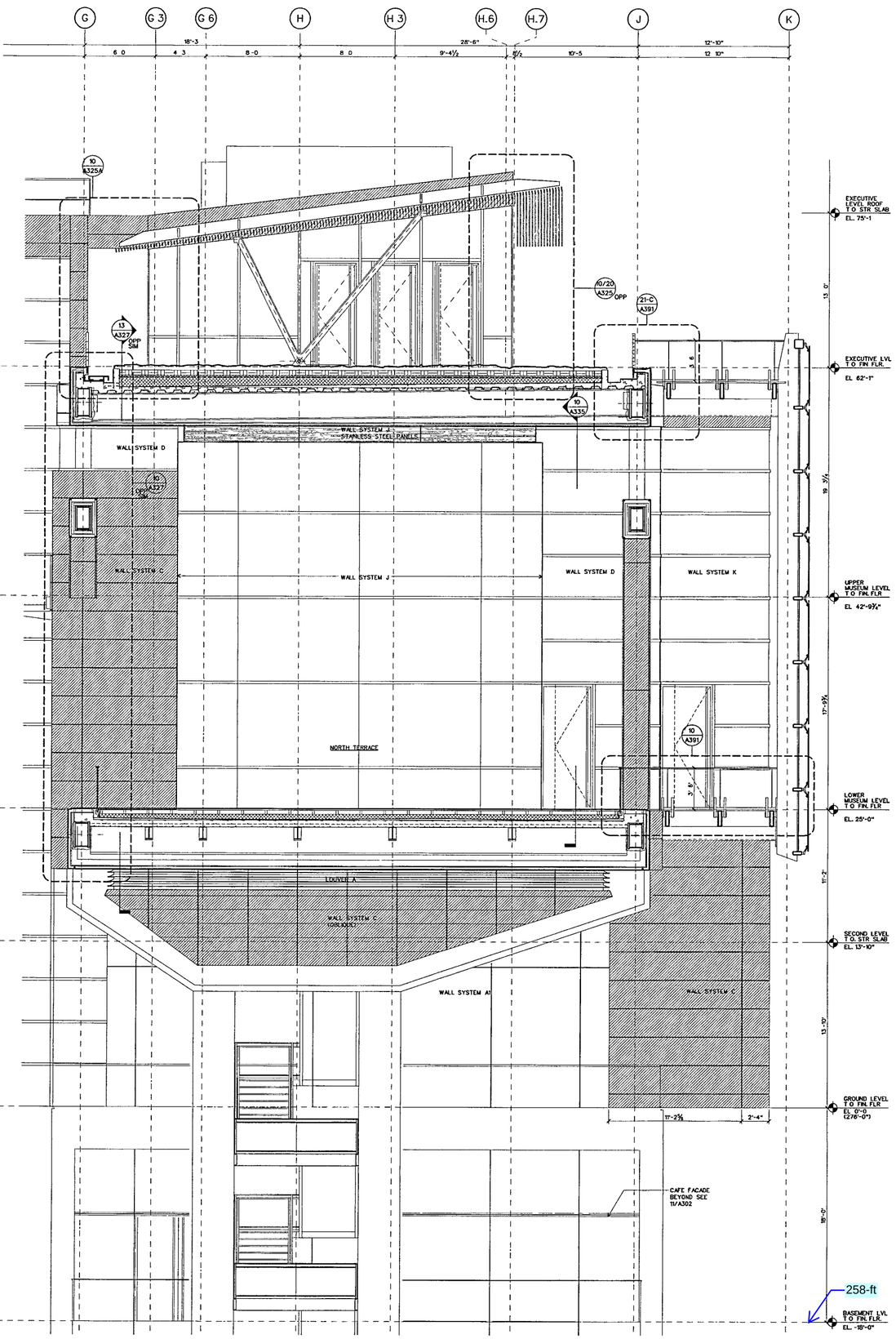

BRIDGE BUILDING: DETAIL SECTION EAST-WEST LOOKING SOUTH THROUGH NORTH END

SCALE ¼" = 1'-0"

B-SECT-EW06 (10)

WILLIAM J CLINTON PRESIDENTIAL CENTER

LITTLE ROCK, ARKANSAS

Architect

POLSHEK PARTNERSHIP LLP
320 West 13th Street
New York, New York 10014
212 807 7171

Coordinating Architects

POLK STANLEY YEARY ARCHITECTS Ltd
700 South Schiller Street
Little Rock, Arkansas 72201
501 378 0878

WITSELL EVANS RASCO
901 West Third Street
Little Rock, Arkansas 72201
501 374 5300

WOODS CARADINE ARCHITECTS
2200 South Main Street
Little Rock, Arkansas 72206
501 374 4060

Landscape Architects

HARGREAVES ASSOCIATES
118 Magazine Street
Cambridge Massachusettes 02139
617 661 0070

LANDSCAPE ARCHITECTURE, Inc.
2300 Cottondale Lane Suite 202
Little Rock, Arkansas 72202
501 374 5610

Structural Engineer

LESLIE E. ROBERTSON ASSOC., RLLP
30 Broad Street, 47th Floor
New York, New York 10004
212 750 9000

MEP Engineers

FLACK + KURTZ Inc.
475 Fifth Avenue
New York, New York 10017
212.532 9600

CROMWELL ARCHITECTS ENGINEERS
101 South Spring Street
Little Rock, Arkansas 72201
501 372.2900

Curtainwall Consultant

R. A. HEINTGES ARCHITECTS
126 Fifth Avenue 9th Floor
New York, New York 10011
212 652-2966

Seal

RICHARD OLCZAK
REGISTERED ARCHITECT
3405
ARKANSAS

Issue	Date
100% Construction Documents	09/27/02
90% Progress Printing	08/30/02
100% Struct./ CD Progress	07/01/02
100% Steel & Concrete CD & Architectural CD Progress	05/15/02
100% Design Development	03/01/02

Job No: 9908

Scale: 1/4" = 1'-0"

Date: September 27, 2002

Title: MUSEUM BUILDING SECTIONS

Sheet No: A303

FOR OFFICIAL USE ONLY

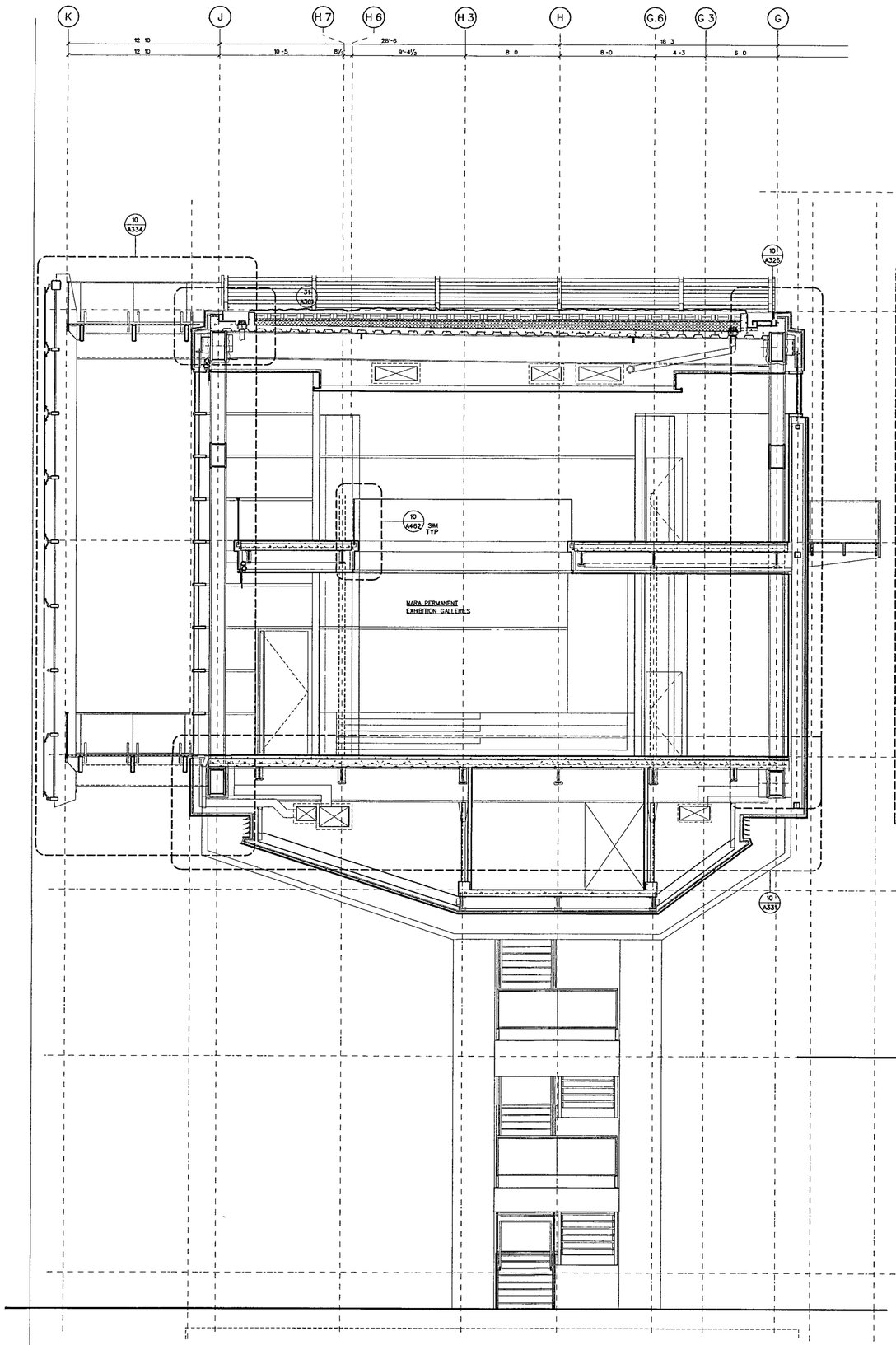

BRIDGE BUILDING DETAIL SECTION EAST-WEST LOOKING NORTH THROUGH MUSEUM

SCALE ¼" = 1-0

B-SECT-EW01

11

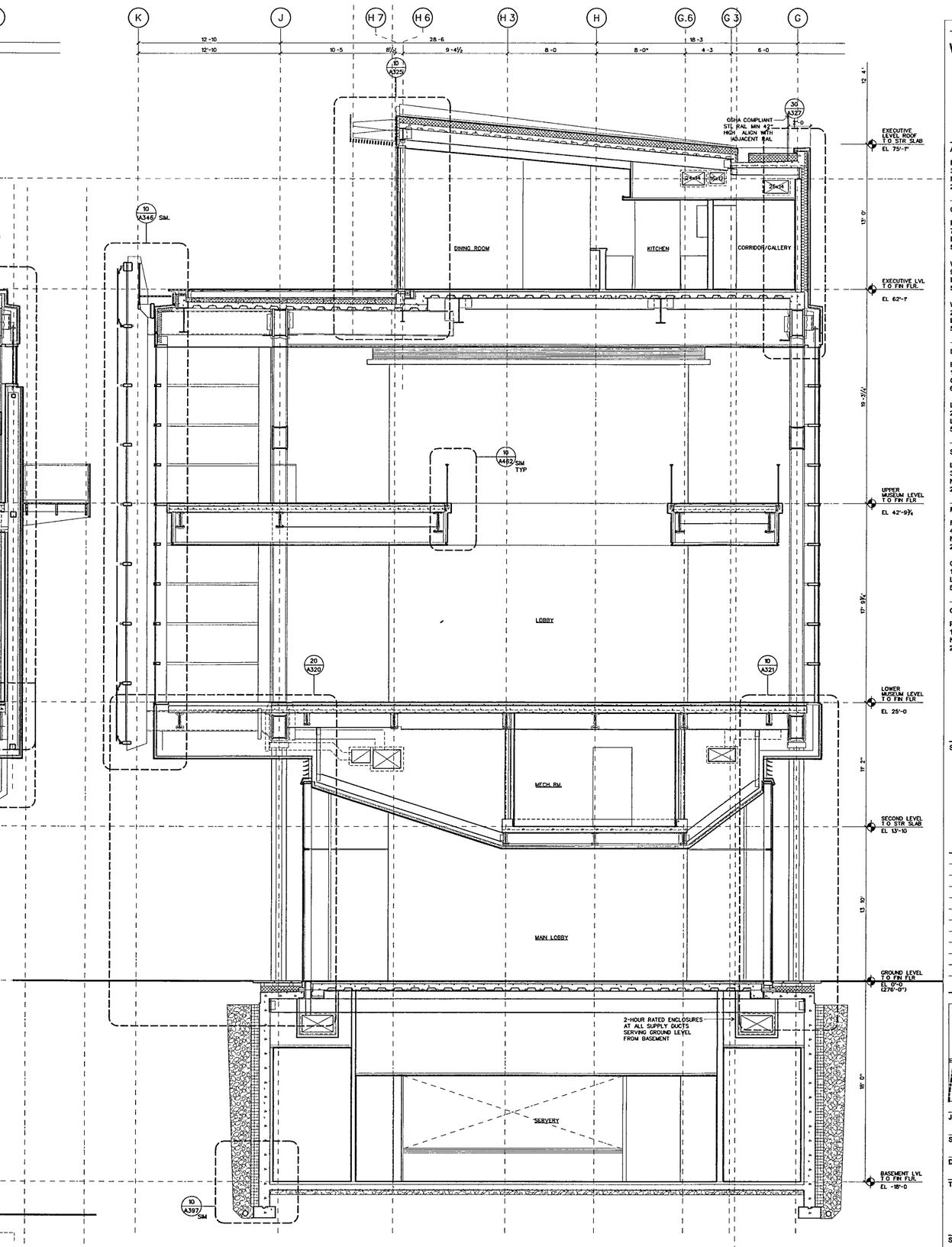

BRIDGE BUILDING DETAIL SECTION EAST-WEST LOOKING NORTH THROUGH SKY LOBBY

SCALE ¼" = 1'-0'

BASE\ELEV\B-SECT-EW05

10

WILLIAM J CLINTON PRESIDENTIAL CENTER

LITTLE ROCK, ARKANSAS

Architect

POLSHEK PARTNERSHIP LLP
320 West 13th Street
New York, New York 10014
212 807 7171

Coordinating Architects

POLK STANLEY YEARY ARCHITECTS Ltd
700 South Schiller Street
Little Rock, Arkansas 72201
501 378 0878

WITSELL EVANS RASCO
901 West Third Street
Little Rock Arkansas 72201
501 374 5300

WOODS CARADINE ARCHITECTS
2200 South Main Street
Little Rock, Arkansas 72206
501 374 4060

Landscape Architects

HARGREAVES ASSOCIATES
118 Magazine Street
Cambridge, Massachusettes 02139
617 661 0070

LANDSCAPE ARCHITECTURE Inc.
2300 Cottondale Lane Suite 202
Little Rock, Arkansas 72202
501 374 5810

Structural Engineer

LESLIE E ROBERTSON ASSOC , RLLP
30 Broad Street, 47th Floor
New York, New York 10004
212.750 9000

MEP Engineers

FLACK + KURTZ Inc.
475 Fifth Avenue
New York, New York 10017
212 532 9600

CROMWELL ARCHITECTS ENGINEERS
101 South Spring Street
Little Rock, Arkansas 72201
501 372 2900

Curtainwall Consultant

R. A. HEINTGES ARCHITECTS
126 Fifth Avenue, 9th Floor
New York, New York 10011
212 652-2966

Seal

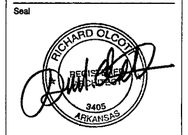

Issue	Date
100% Construction Documents	09/27/02
90% Progress Printing	08/30/02
100% Struct./ CD Progress	07/01/02
Bridge Bldg Substructure	06/14/02
100% Steel & Concrete CD & Architectural CD Progress	05/15/02
100% Design Development	03/01/02

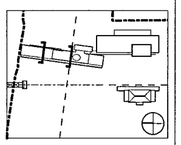

Job No 9908

Scale 1/4" = 1'-0"

Date September 27, 2002

Title

MUSEUM BUILDING SECTIONS

Sheet No

A304

FOR OFFICIAL USE ONLY

35

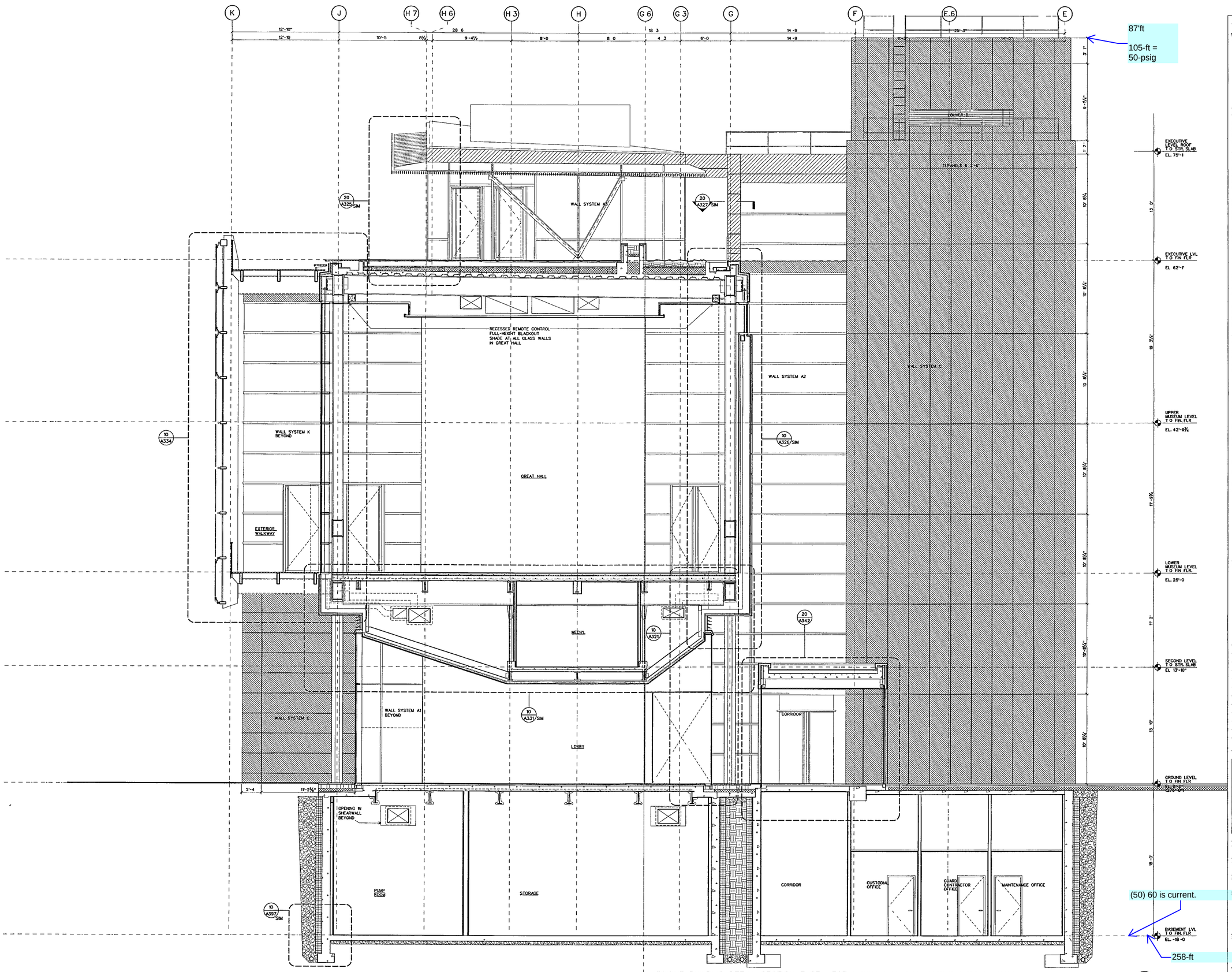

BRIDGE BUILDING: DETAIL SECTION EAST-WEST LOOKING NORTH THROUGH GREAT HALL

SCALE ¼" = 1'-0

B-SECT-EW04 (10)

WILLIAM J CLINTON PRESIDENTIAL CENTER

LITTLE ROCK, ARKANSAS

Architect

POLSHEK PARTNERSHIP LLP
320 West 13th Street
New York, New York 10014
212 807 7171

Coordinating Architects

POLK STANLEY YEARY ARCHITECTS Ltd
700 South Schiller Street
Little Rock Arkansas 72201
501 378 0878

WITSELL EVANS RASCO
901 West Third Street
Little Rock Arkansas 72201
501 374.5300

WOODS CARADINE ARCHITECTS
2200 South Main Street
Little Rock, Arkansas 72206
501 374.4060

Landscape Architects

HARGREAVES ASSOCIATES
118 Magazine Street
Cambridge Massachusettes 02139
617 661 0070

LANDSCAPE ARCHITECTURE Inc.
2300 Cottondale Lane Suite 202
Little Rock, Arkansas 72202
501 374 5810

Structural Engineer

LESLIE E ROBERTSON ASSOC , RLLP
30 Broad Street, 47th Floor
New York, New York 10004
212.750 9000

MEP Engineers

FLACK + KURTZ Inc
475 Fifth Avenue
New York, New York 10017
212 532 9600

CROMWELL ARCHITECTS ENGINEERS
101 South Spring Street
Little Rock Arkansas 72201
501.372.2900

Curtainwall Consultant

R. A. HEINTGES ARCHITECTS
126 Fifth Avenue, 9th Floor
New York, New York 10011
212 652-2966

Seal

RICHARD OLCOTT HEINTGES ARCHITECT 3405 ARKANSAS

Issue	Date
100% Construction Documents	09/27/02
90% Progress Printing	08/30/02
100% Struct./ CD Progress	07/01/02
Bridge Bldg Substructure	06/14/02
100% Steel & Concrete CD & Architectural CD Progress	05/15/02
100% Design Development	03/01/02

Job No 9908

Scale 1/4" = 1'-0"

Date September 27, 2002

Title MUSEUM BUILDING SECTIONS

Sheet No A305

FOR OFFICIAL USE ONLY

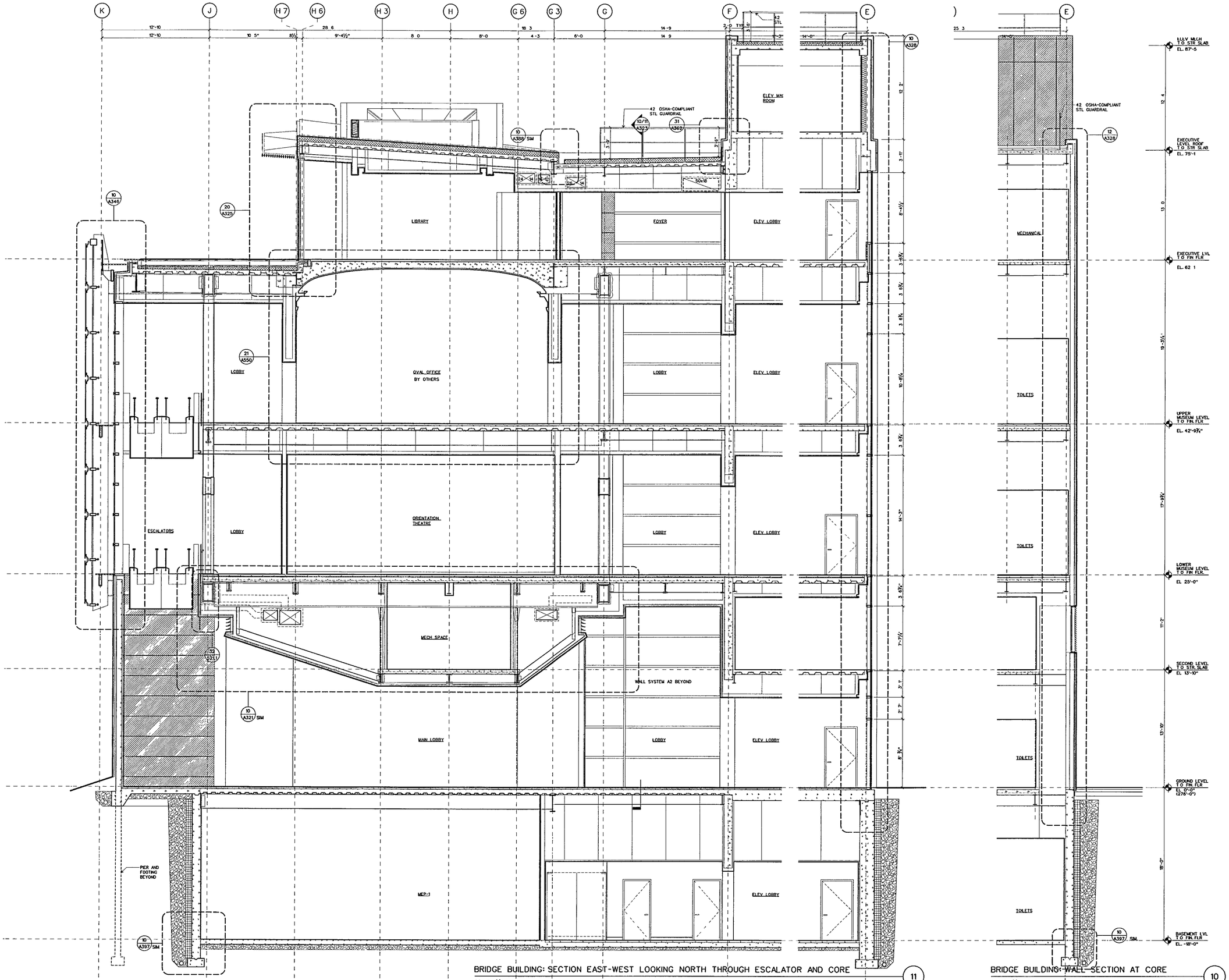

BRIDGE BUILDING: SECTION EAST-WEST LOOKING NORTH THROUGH ESCALATOR AND CORE

SCALE 1/4" = 1'-0 B-SECT-EW03 11

BRIDGE BUILDING: WALL SECTION AT CORE

SCALE 1/4" = 1'-0 B-WSECT-EW01 10

WILLIAM J CLINTON PRESIDENTIAL CENTER

LITTLE ROCK, ARKANSAS

Architect

POLSHEK PARTNERSHIP LLP
320 West 13th Street
New York, New York 10014
212 807 7171

Coordinating Architects

POLK STANLEY YEARY ARCHITECTS Ltd
700 South Schiller Street
Little Rock, Arkansas 72201
501 378 0878

WITSELL EVANS RASCO
901 West Third Street
Little Rock, Arkansas 72201
501 374 5300

WOODS CARADINE ARCHITECTS
2200 South Main Street
Little Rock, Arkansas 72206
501 374 4060

Landscape Architects

HARGREAVES ASSOCIATES
118 Magazine Street
Cambridge Massachusettes 02139
617 661 0070

LANDSCAPE ARCHITECTURE Inc.
2300 Cottondale Lane Suite 202
Little Rock, Arkansas 72202
501 374 5610

Structural Engineer

LESLIE E ROBERTSON ASSOC , RLLP
30 Broad Street, 47th Floor
New York, New York 10004
212 750 9000

MEP Engineers

FLACK + KURTZ Inc.
475 Fifth Avenue
New York, New York 10017
212 532.9600

CROMWELL ARCHITECTS ENGINEERS
101 South Spring Street
Little Rock, Arkansas 72201
501 372.2900

Curtainwall Consultant

R. A. HEINTGES ARCHITECTS
125 Fifth Avenue 9th Floor
New York, New York 10011
212 652-2966

Seal

RICHARD OLSON REGISTERED ARCHITECT 3405 ARKANSAS

Issue	Date
100% Construction Documents	09/27/02
90% Progress Printing	08/30/02
100% Struct./ CD Progress	07/01/02
Bridge Bldg Substructure	06/14/02
100% Steel & Concrete CD & Architectural CD Progress	05/15/02
100% Design Development	03/01/02

Job No 9908

Scale 1/4" = 1'-0"

Date September 27, 2002

Title

MUSEUM BUILDING SECTION

Sheet No

A306

FOR OFFICIAL USE ONLY

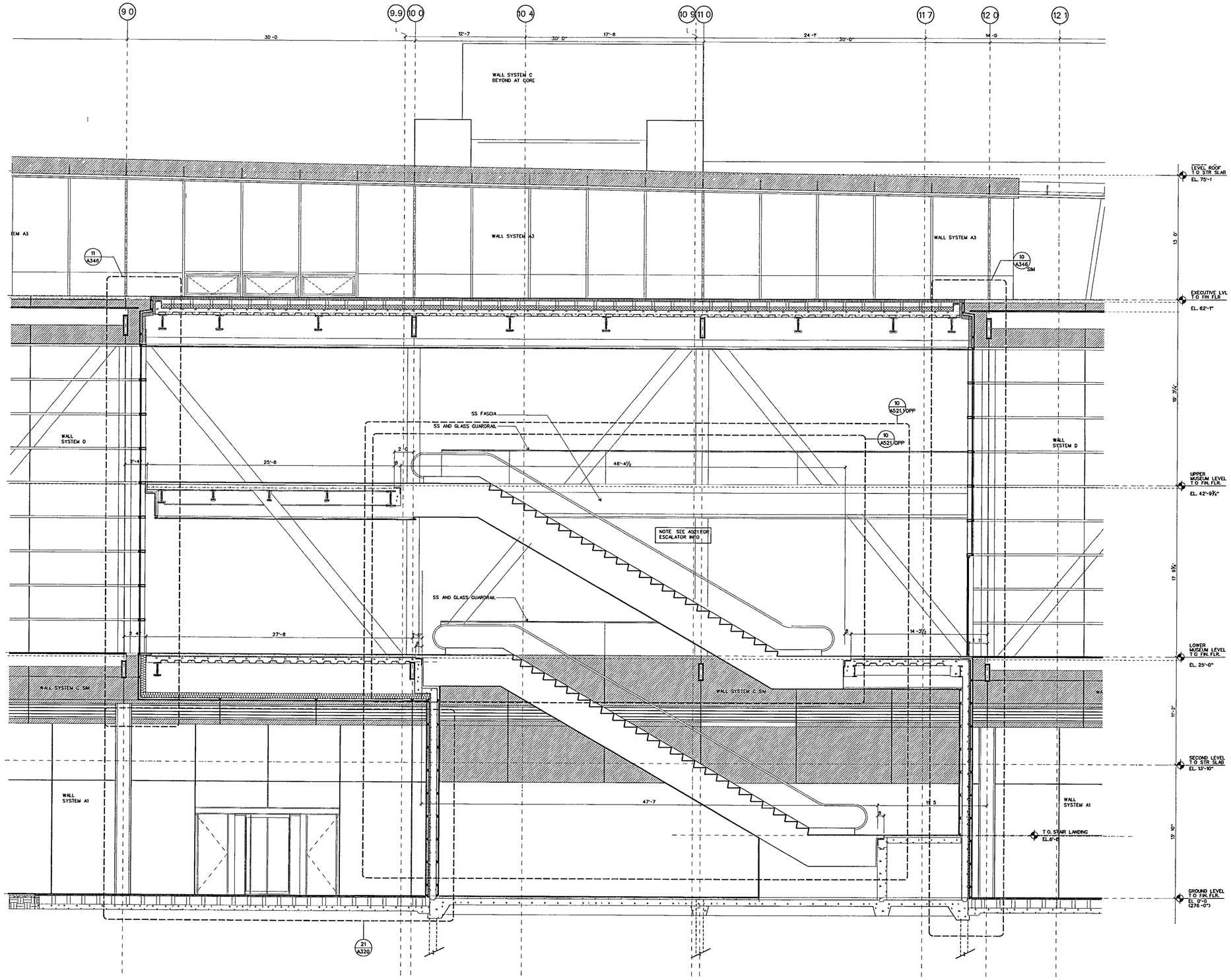

BRIDGE BUILDING: NORTH-SOUTH SECTION THROUGH ESCALATOR LOOKING EAST

SCALE ¼ = 1-0

b-sect-ns06 10

WILLIAM J CLINTON PRESIDENTIAL CENTER

LITTLE ROCK, ARKANSAS

Architect

POLSHEK PARTNERSHIP LLP
320 West 13th Street
New York, New York 10014
212 807 7171

Coordinating Architects

POLK STANLEY YEARY ARCHITECTS Ltd
700 South Schiller Street
Little Rock Arkansas 72201
501 378 0878

WITSELL EVANS RASCO
901 West Third Street
Little Rock, Arkansas 72201
501 374 5300

WOODS CARADINE ARCHITECTS
2200 South Main Street
Little Rock, Arkansas 72206
501 374 4060

Landscape Architects

HARGREAVES ASSOCIATES
118 Magazine Street
Cambridge, Massachusettes 02139
617 661 0070

LANDSCAPE ARCHITECTURE Inc.
2300 Cottondale Lane Suite 202
Little Rock Arkansas 72202
501 374 5810

Structural Engineer

LESLIE E. ROBERTSON ASSOC RLLP
30 Broad Street, 47th Floor
New York, New York 10004
212 750 9000

MEP Engineers

FLACK + KURTZ Inc.
475 Fifth Avenue
New York, New York 10017
212.532 9600

CROMWELL ARCHITECTS ENGINEERS
101 South Spring Street
Little Rock, Arkansas 72201
501 372 2900

Curtainwall Consultant

R. A. HEINTGES ARCHITECTS
120 Fifth Avenue 9th Floor
New York, New York 10011
212 652-2966

Seal

RICHARD OLCOTT REGISTERED ARCHITECT 3405 ARKANSAS

Issue	Date
100% Construction Documents	09/27/02
90% Progress Printing	08/30/02
100% Struct./ CD Progress	07/01/02
Bridge Bldg Substructure	06/14/02
100% Steel & Concrete CD & Architectural CD Progress	05/15/02
100% Design Development	03/01/02

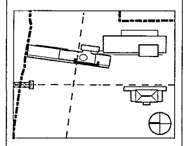

Job No 9908

Scale 1/4" = 1'-0"

Date September 27, 2002

Title

MUSEUM BUILDING SECTION

Sheet No

A307

FOR OFFICIAL USE ONLY

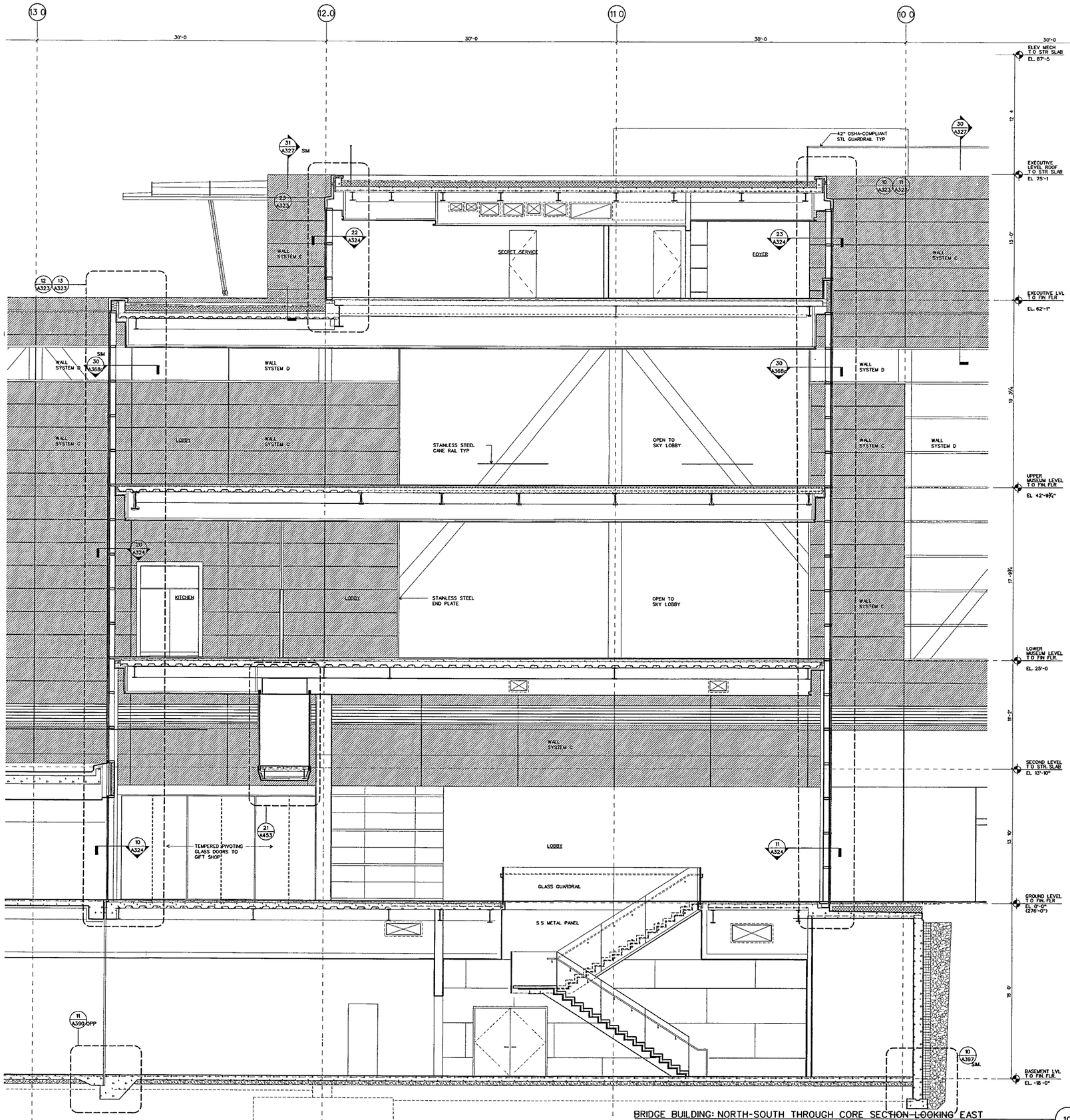

BRIDGE BUILDING: NORTH-SOUTH THROUGH CORE SECTION-LOOKING EAST

SCALE 1/4" = 1'-0"

b-sect-ns03 10

WILLIAM J CLINTON PRESIDENTIAL CENTER

LITTLE ROCK, ARKANSAS

Architect

POLSHEK PARTNERSHIP LLP
320 West 13th Street
New York, New York 10014
212 807 7171

Coordinating Architects

POLK STANLEY YEARY ARCHITECTS Ltd
700 South Schiller Street
Little Rock, Arkansas 72201
501 378 0878

WITSELL EVANS RASCO
901 West Third Street
Little Rock, Arkansas 72201
501 374 5300

WOODS CARADINE ARCHITECTS
2200 South Main Street
Little Rock, Arkansas 72206
501 374.4060

Landscape Architects

HARGREAVES ASSOCIATES
118 Magazine Street
Cambridge Massachusetts 02139
617 661 0070

LANDSCAPE ARCHITECTURE, Inc.
2300 Cottondale Lane Suite 202
Little Rock, Arkansas 72202
501 374 5810

Structural Engineer

LESLIE E ROBERTSON ASSOC RLLP
30 Broad Street, 47th Floor
New York, New York 10004
212 750 9000

MEP Engineers

FLACK + KURTZ Inc.
475 Fifth Avenue
New York, New York 10017
212 532 9600

CROMWELL ARCHITECTS ENGINEERS
101 South Spring Street
Little Rock, Arkansas 72201
501 372 2900

Curtainwall Consultant

R A. HEINTGES ARCHITECTS
126 Fifth Avenue, 9th Floor
New York, New York 10011
212.652-2966

Seal

RICHARD OLCOTT WHITTEMORE ARCHITECT 3405 ARKANSAS

Issue	Date
100% Construction Documents	09/27/02
90% Progress Printing	08/30/02
100% Struct./ CD Progress	07/01/02
Bridge Bldg Substructure	06/14/02
100% Steel & Concrete CD & Architectural CD Progress	05/15/02
100% Design Development	03/01/02

Job No 9908

Scale 1/4" = 1'-0"

Date September 27, 2002

Title

MUSEUM BUILDING SECTION

Sheet No

A308

FOR OFFICIAL USE ONLY

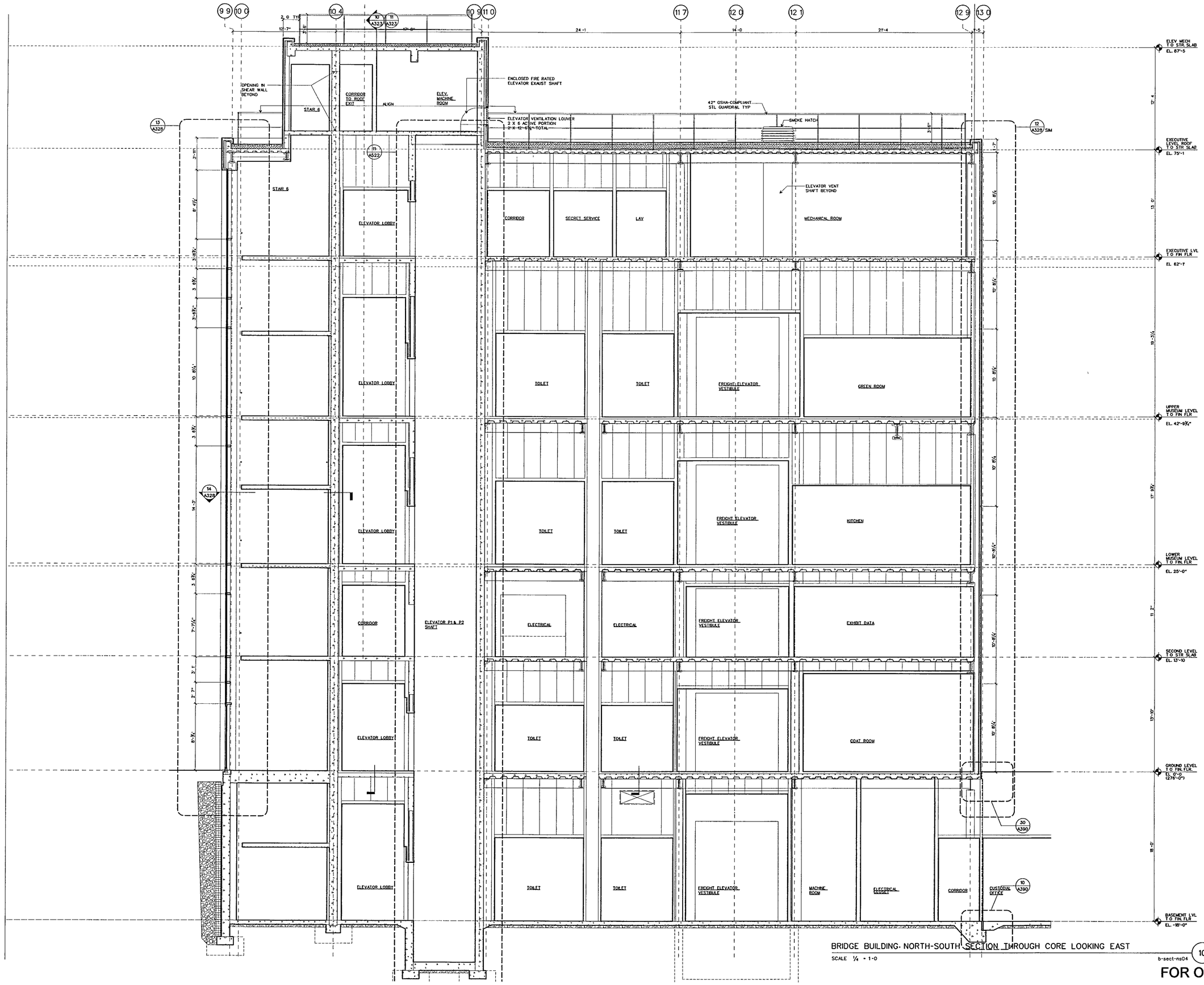

BRIDGE BUILDING- NORTH-SOUTH SECTION THROUGH CORE LOOKING EAST

SCALE 1/4 = 1-0

b-sect-ns04 (10)

WILLIAM J CLINTON PRESIDENTIAL CENTER

LITTLE ROCK, ARKANSAS

Architect

POLSHEK PARTNERSHIP LLP
320 West 13th Street
New York, New York 10014
212.807 7171

Coordinating Architects

POLK STANLEY YEARY ARCHITECTS Ltd
700 South Schiller Street
Little Rock, Arkansas 72201
501 378 0878

WITSELL EVANS RASCO
901 West Third Street
Little Rock Arkansas 72201
501 374 5300

WOODS CARADINE ARCHITECTS
2200 South Main Street
Little Rock, Arkansas 72206
501 374 4060

Landscape Architects

HARGREAVES ASSOCIATES
118 Magazine Street
Cambridge Massachusettes 02139
617 661 0070

LANDSCAPE ARCHITECTURE Inc.
2300 Cottondale Lane Suite 202
Little Rock, Arkansas 72202
501 374 5810

Structural Engineer

LESLIE E ROBERTSON ASSOC RLLP
30 Broad Street, 47th Floor
New York New York 10004
212 750 9000

MEP Engineers

FLACK + KURTZ Inc.
475 Fifth Avenue
New York, New York 10017
212 532.9600

CROMWELL ARCHITECTS ENGINEERS
101 South Spring Street
Little Rock, Arkansas 72201
501 372 2900

Curtainwall Consultant

R A. HEINTGES ARCHITECTS
126 Fifth Avenue 9th Floor
New York, New York 10011
212.652-2966

Seal

RICHARD OLSON REGISTERED ARCHITECT 3405 ARKANSAS

Issue	Date
100% Construction Documents	09/27/02
90% Progress Printing	08/30/02
100% Struct./ CD Progress	07/01/02
Bridge Bldg Substructure	06/14/02
100% Steel & Concrete CD & Architectural CD Progress	05/15/02
100% Design Development	03/01/02

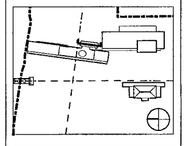

Job No 9908

Scale 1/4" = 1'-0"

Date September 27, 2002

Title

MUSEUM BUILDING SECTION

Sheet No

A309

FOR OFFICIAL USE ONLY

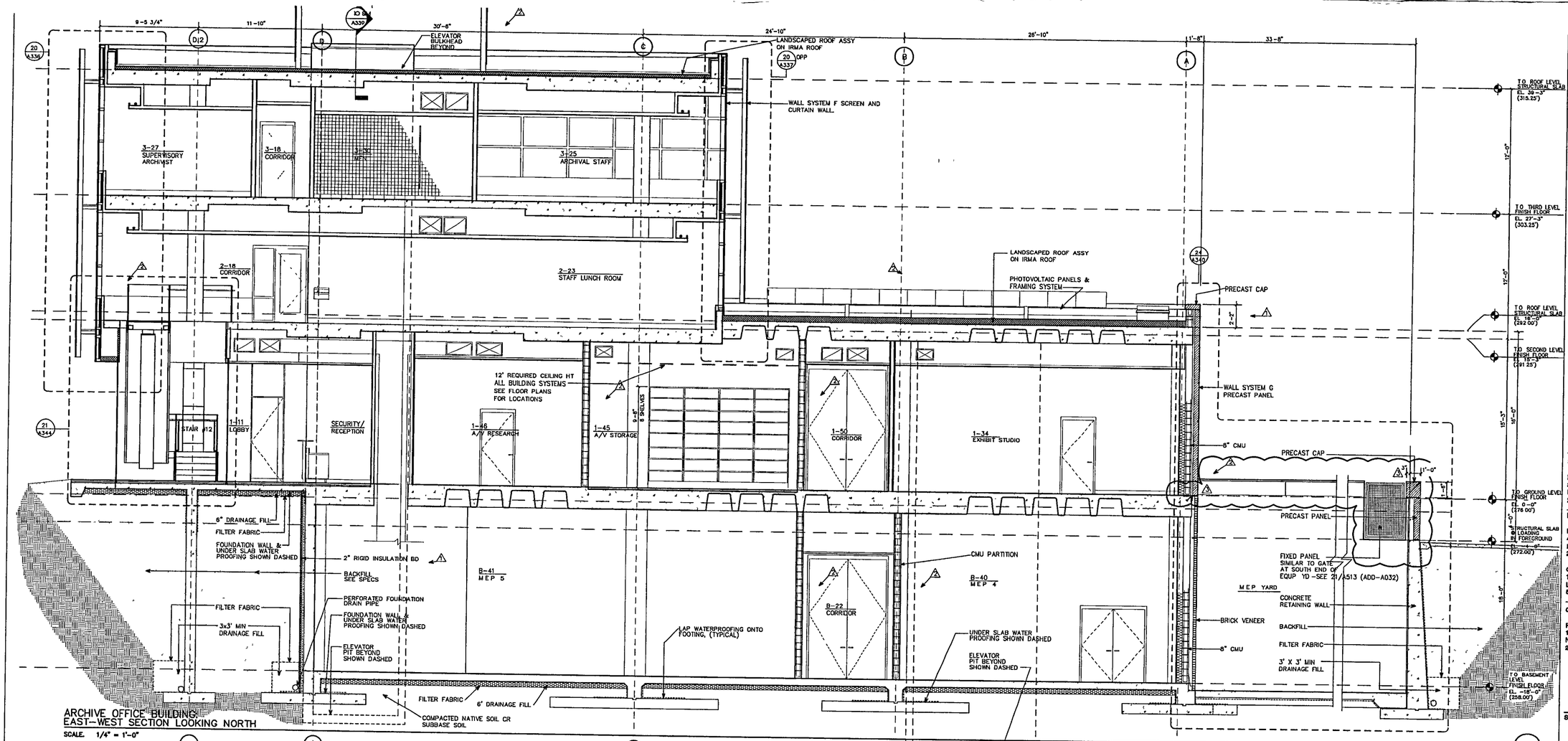

ARCHIVE OFFICE BUILDING:
EAST-WEST SECTION LOOKING NORTH
SCALE. 1/4" = 1'-0"

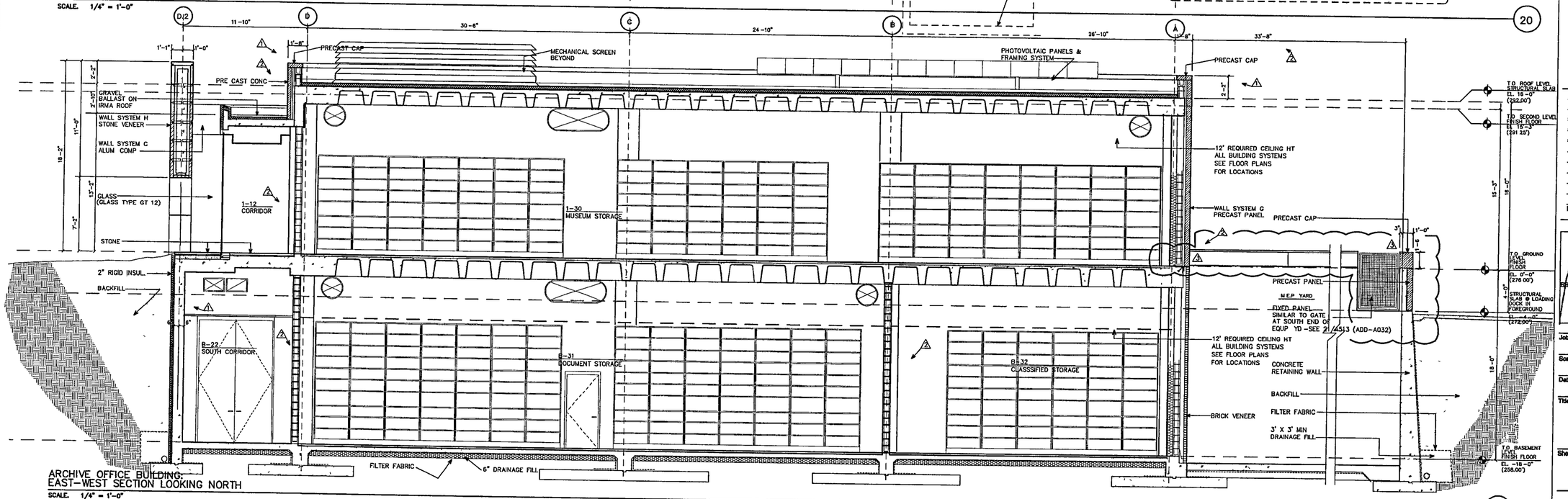

ARCHIVE OFFICE BUILDING:
EAST-WEST SECTION LOOKING NORTH
SCALE. 1/4" = 1'-0"

WILLIAM J. CLINTON PRESIDENTIAL CENTER

LITTLE ROCK, ARKANSAS

Architect

POLSHEK PARTNERSHIP LLP
320 West 13th Street
New York, New York 10014
212.807.7171

Coordinating Architects

POLK STANLEY YEARY ARCHITECTS Ltd
700 South Schiller Street
Little Rock, Arkansas 72201
501.378.0878

WITSELL EVANS & RASCO
901 West Third Street
Little Rock, Arkansas 72201
501.374.5300

WOODS CARADINE ARCHITECTS
2200 South Main Street
Little Rock, Arkansas 72206
501.374.4060

Landscape Architects

HARGREAVES ASSOCIATES
118 Magazine Street
Cambridge, Massachusettes 02139
617.661.0070

LANDSCAPE ARCHITECTURE, Inc.
2300 Cottondale Lane Suite 202
Little Rock, Arkansas 72202
501.374.5610

Structural Engineer

LESLIE E. ROBERTSON ASSOC., RLLP
30 Broad Street, 47th Floor
New York, New York 10017
212.750.9000

MEP Engineers

FLACK + KURTZ Inc.
475 Fifth Avenue
New York, New York 10017
212.532.9600

CROMWELL ARCHITECTS ENGINEERS
101 South Spring Street
Little Rock, Arkansas 72201
501.372.2900

Curtainwall Consultant

R.A. HEINTGES ARCHITECTS
126 Fifth Avenue, 9th. Floor
New York, New York 10011
212.852-2966

Seal

POLK STANLEY YEARY ARCHITECTS REGISTRATION C-136 ARKANSAS

Issue	Date
4 Addendum #4	11/22/02
3 Addendum #3	11/15/02
1 Addendum #1	10/23/02
100% Construction Documents	09/27/02
90% Progress Printing	08/30/02
100% Struct/CD Progress	07/01/02
100% Steel & Concrete CD	
% Architectural CD Progress	05/15/02
100% Design Development	03/01/02

Job No. PPA. 9908 PSY. 426D

Scale 1/4" = 1'-0"

Date September 27, 2002

Title

ARCHIVE BUILDING SECTIONS

Sheet No.

A310

MONDAY, DECEMBER 02, 2002 9:45 AM

FOR OFFICIAL USE ONLY

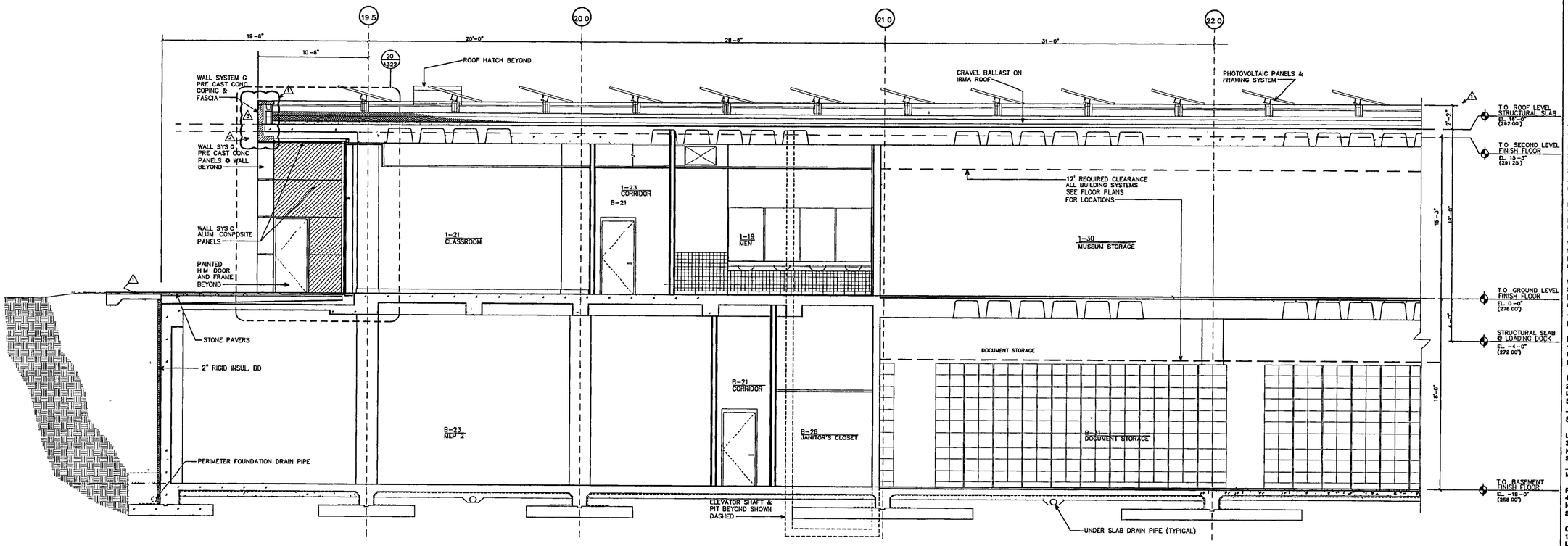

ARCHIVE BUILDING: NORTH–SOUTH SECTION LOOKING EAST (NORTH END)

SCALE: 1/4" = 1'-0"

20

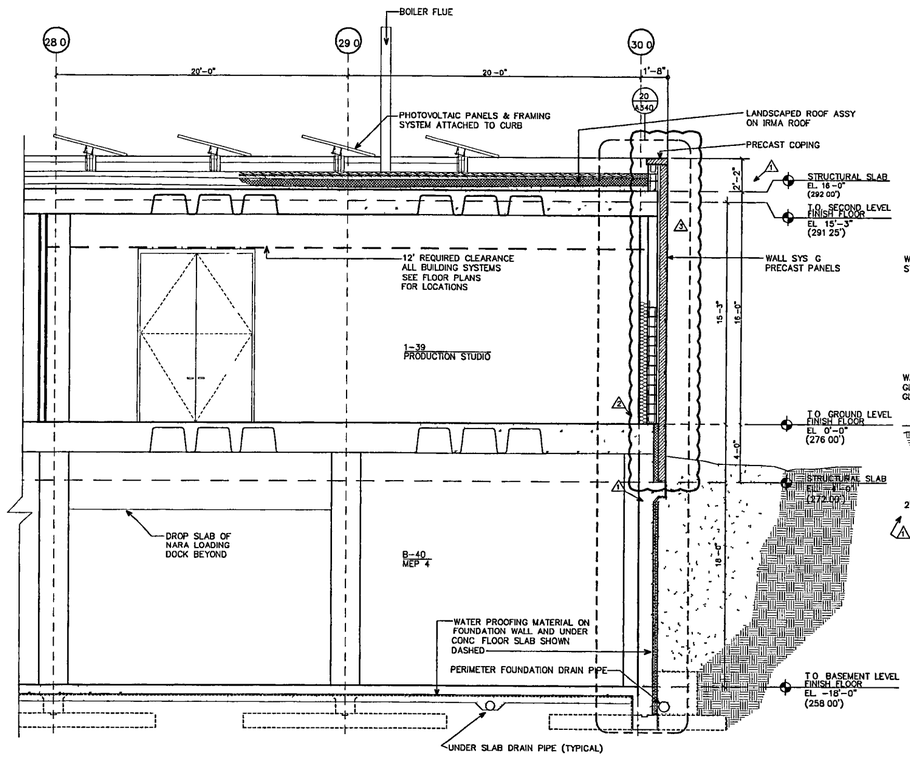

ARCHIVE BUILDING: NORTH–SOUTH SECTION LOOKING EAST (SOUTH END)

SCALE: 1/4" = 1'-0"

12

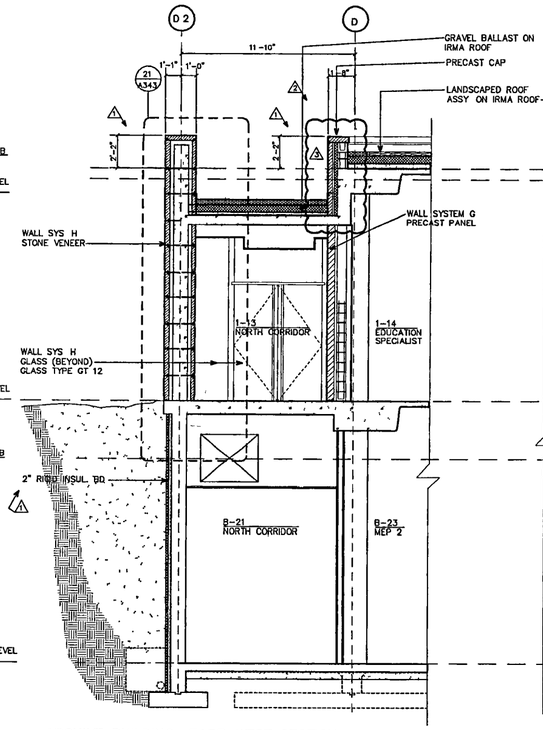

ARCHIVE BUILDING: EAST–WEST SECTION LOOKING NORTH THROUGH CORRIDOR

SCALE: 1/4" = 1'-0"

11

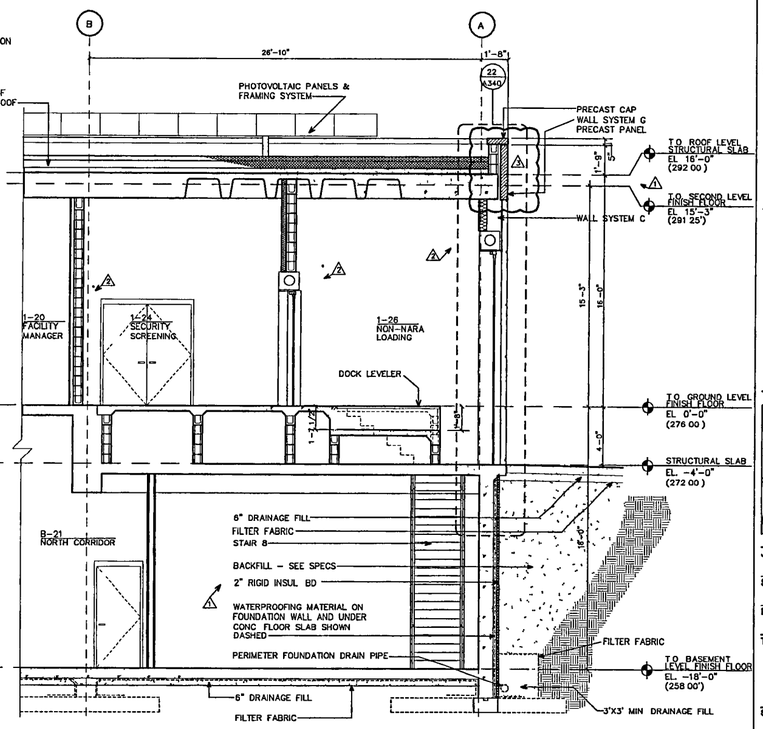

ARCHIVE BUILDING: EAST–WEST SECTION LOOKING NORTH THROUGH NON-NARA LOADING DOCK

SCALE: 1/4" = 1'-0"

10

WILLIAM J. CLINTON PRESIDENTIAL CENTER

LITTLE ROCK, ARKANSAS

Architect

POLSHEK PARTNERSHIP LLP
320 West 13th Street
New York, New York 10014
212.807.7171

Coordinating Architects

POLK STANLEY YEARY ARCHITECTS Ltd
700 South Schiller Street
Little Rock, Arkansas 72201
501.376.0678

WITSELL EVANS & RASCO
901 West Third Street
Little Rock, Arkansas 72201
501.374.5300

WOODS CARADINE ARCHITECTS
2200 South Main Street
Little Rock, Arkansas 72206
501.374.4060

Landscape Architects

HARGREAVES ASSOCIATES
118 Magazine Street
Cambridge, Massachusettes 02139
617.661.0070

LANDSCAPE ARCHITECTURE, Inc.
2300 Cottondale Lane
Little Rock, Arkansas 72201
501.374.5610

Structural Engineer

LESLIE E. ROBERTSON ASSOC., RLLP
30 Broad Street, 47th Floor
New York, New York 10017
212.750.9000

MEP Engineers

FLACK + KURTZ Inc.
475 Fifth Avenue
New York, New York 10017
212.532.9600

CROMWELL ARCHITECTS ENGINEERS
101 South Spring Street
Little Rock, Arkansas 72201
501.372.2900

Curtainwall Consultant

R.A. HEINTGES ARCHITECTS
126 Fifth Avenue, 9th Floor
New York, New York 10011
212.652-2966

Seal

POLK STANLEY YEARY ARCHITECTS REGISTRATION NO. C-136 ARKANSAS

Issue	Date
4 Addendum #4	11/22/02
3 Addendum #3	11/15/02
1 Addendum #1	10/23/02
100% Construction Documents	09/27/02
90% Progress Printing	08/30/02
100% Struct./ CD Progress	07/01/02
100% Steel & Concrete CD & Architectural CD Progress	05/15/02
100% Design Development	03/01/02

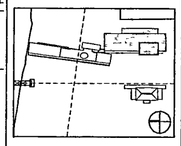

Job No. PPA. 9908 PSY. 426D

Scale 1/4" = 1'-0"

Date September 27, 2002

Title **ARCHIVE BUILDING PARTIAL SECTIONS**

Sheet No. **A311**

MONDAY, DECEMBER 02, 2002 8:47 AM

FOR OFFICIAL USE ONLY

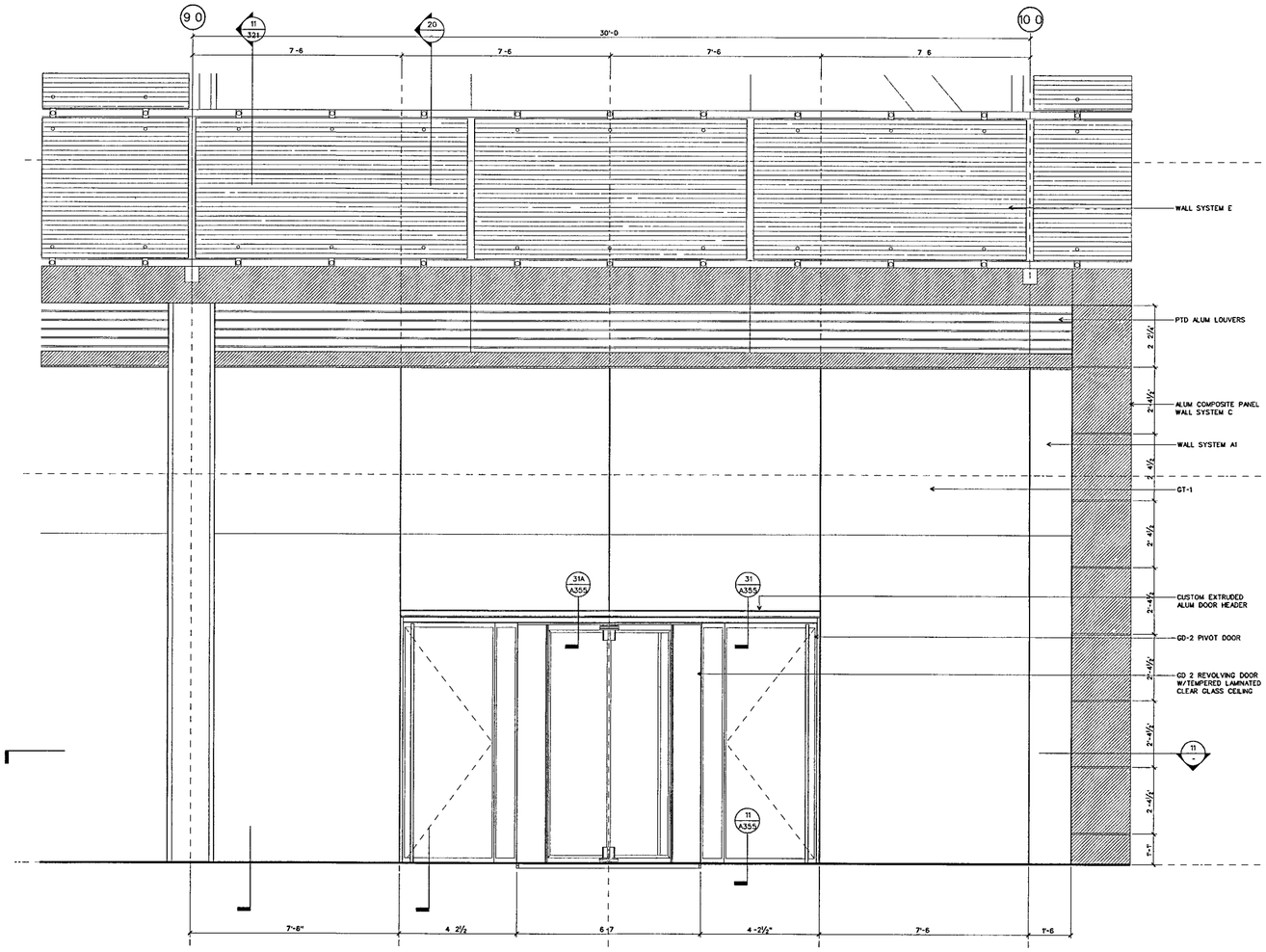

WALL SYSTEM A1· ELEVATION AT ENTRY

SCALE ½ = 1-0'

DETAILS/DTL-CWA 21

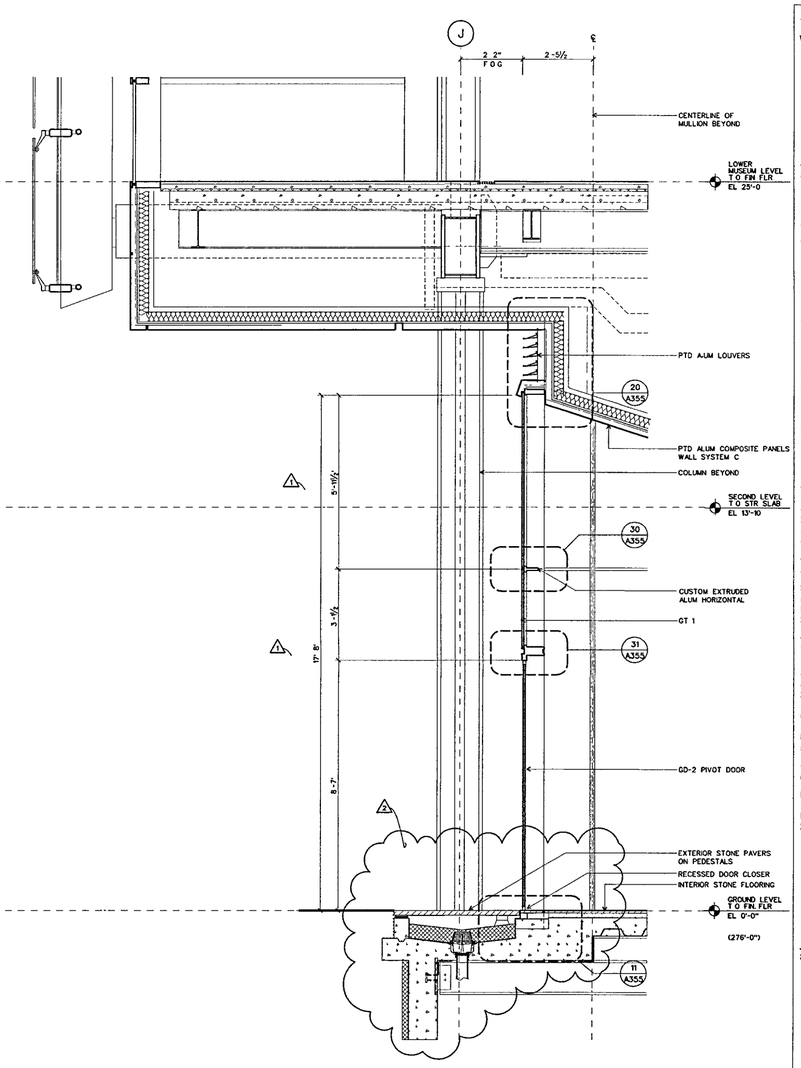

WALL SYSTEM A1· WALL SECTION AT ENTRY

SCALE ½ = 1-0

DETAILS/DTL-CWA 20

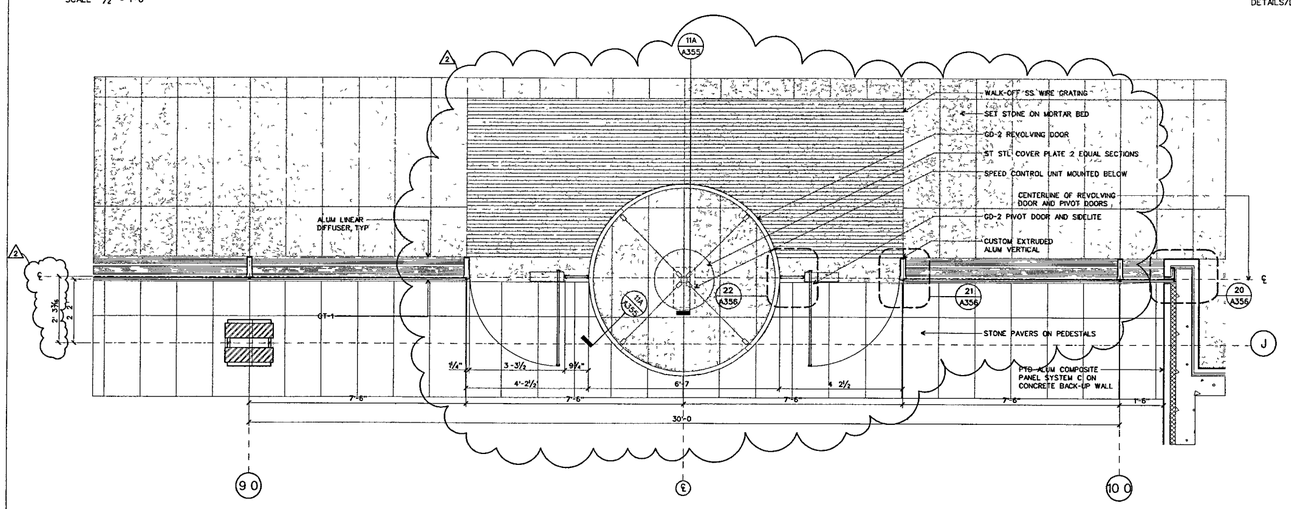

WALL SYSTEM A1· PLAN SECTION AT ENTRY

SCALE ½" = 1'-0"

DETAILS/DTL-CWA 11

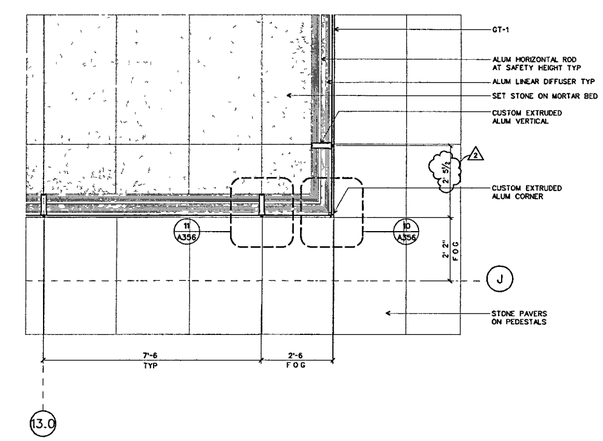

WALL SYSTEM A1: PLAN SECTION AT LOBBY CORNER

SCALE ½' = 1-0

DETAILS/DTL-CWA 10

WILLIAM J CLINTON PRESIDENTIAL CENTER

LITTLE ROCK, ARKANSAS

Architect

POLSHEK PARTNERSHIP LLP
320 West 13th Street
New York, New York 10014
212 807 7171

Coordinatng Architects

POLK STANLEY YEARY ARCHITECTS Ltd
700 South Schiller Street
Little Rock Arkansas 72201
501 378 0878

WITSELL EVANS RASCO
901 West Third Street
Little Rock, Arkansas 72201
501 374 5300

WOODS CARADINE ARCHITECTS
2200 South Main Street
Little Rock Arkansas 72206
501 374 4060

Landscape Architects

HARGREAVES ASSOCIATES
118 Magazine Street
Cambndge Massachusettes 02139
617 661 0070

LANDSCAPE ARCHITECTURE Inc.
2300 Cottondale Lane Suite 202
Little Rock, Arkansas 72202
501 374 5810

Structural Engineer

LESLIE E ROBERTSON ASSOC , RLLP
30 Broad Street, 47th Floor
New York, New York 10004
212 750 9000

MEP Engineers

FLACK + KURTZ Inc
475 Fifth Avenue
New York, New York 10017
212.532 9600

CROMWELL ARCHITECTS ENGINEERS
101 South Spring Street
Little Rock Arkansas 72201
501 372 2900

Curtainwall Consultant

R. A. HEINTGES ARCHITECTS
126 Fifth Avenue, 9th Floor
New York, New York 10011
212 652-2966

Seal

Issue	Date
2 100% Construction Documents	09/27/02
1 90% Progress Printing	08/30/02
100% Struct./ CD Progress	07/01/02
Bridge Bldg Substructure	06/14/02
100% Design Development	03/01/02

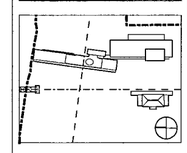

Job No 9908

Scale 1/2" = 1'-0"

Date September 27, 2002

Title WALL SYSTEM A1 PLANS, ELEVATION AND SECTION

Sheet No A320

FOR OFFICIAL USE ONLY

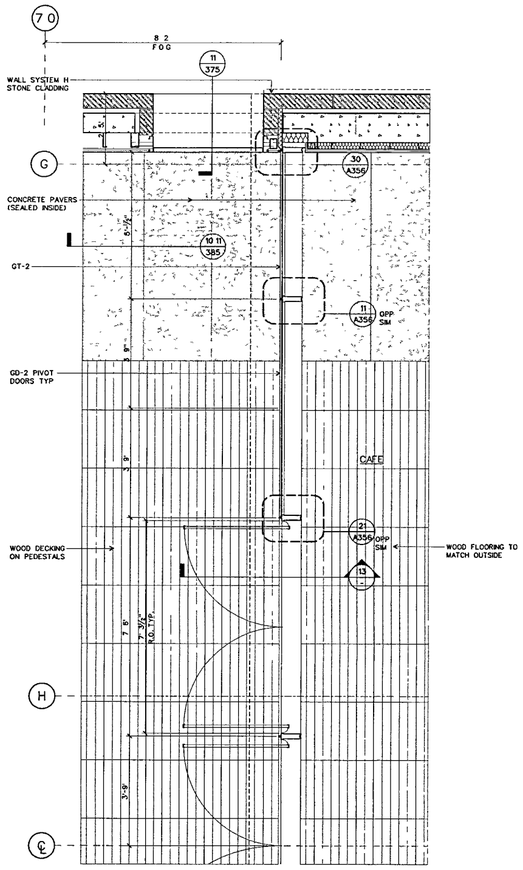

WALL SYSTEM A1 PLAN SECTION AT CAFE

SCALE ½" = 1'-0 DETAILS/DTL-CWA2 (21)

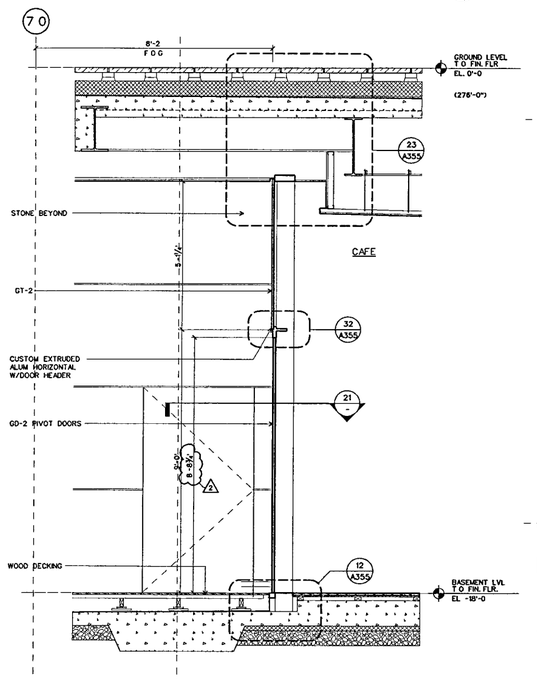

WALL SYSTEM A1 WALL SECTION AT CAFE, TYP

SCALE ½" = 1'-0" DETAILS/DTL-CWA2 (13)

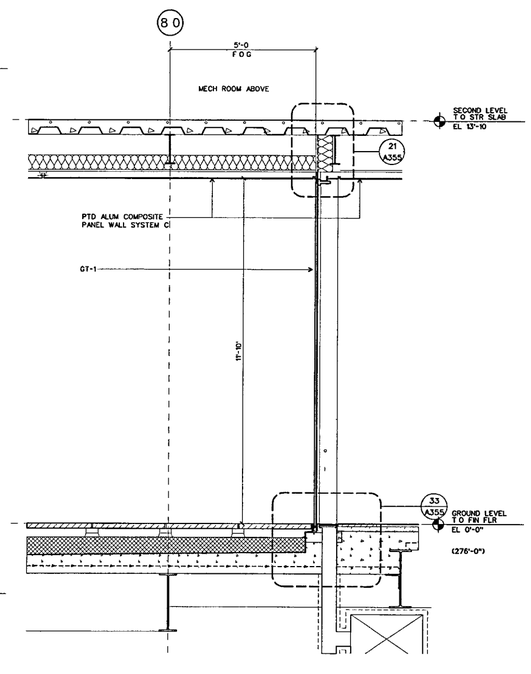

WALL SYSTEM A1 WALL SECTION AT LOBBY, NORTH ELEV

SCALE ½" = 1-0 DETAILS/DTL-CWA2 (12)

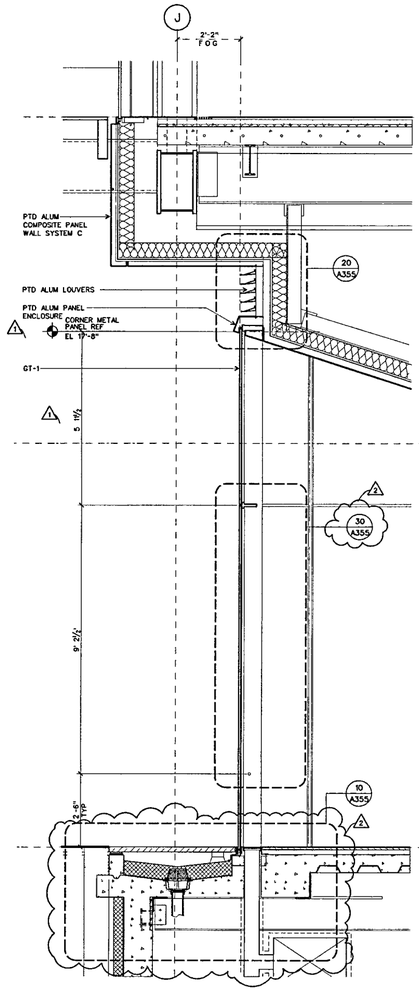

WALL SYSTEM A1 WALL SECTION AT LOBBY, TYP

SCALE ½" = 1'-0" DETAILS/DTL-CWA2 (11)

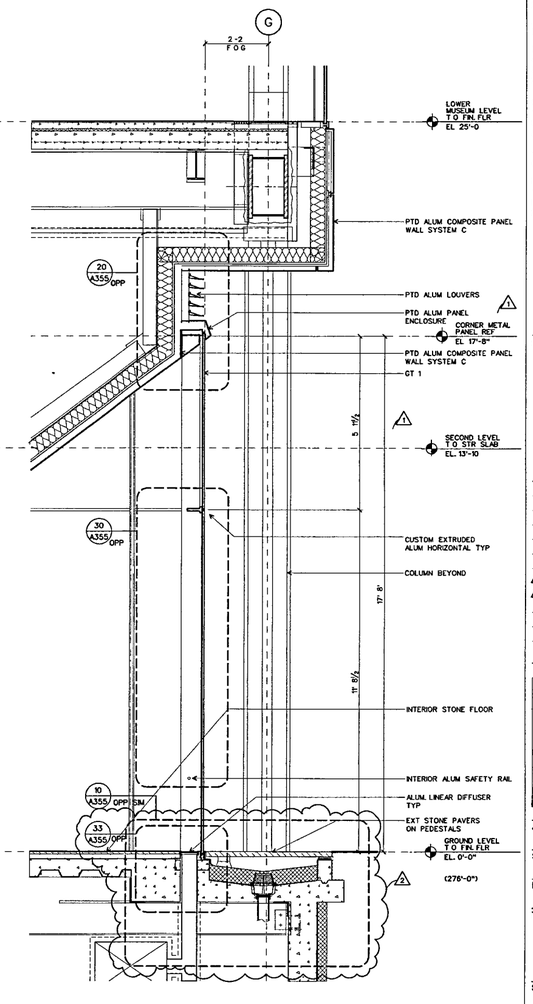

WALL SYSTEM A1 WALL SECTION AT LOBBY EAST ELEV

SCALE ½" = 1'-0" DETAILS/DTL-CWA2 (10)

WILLIAM J CLINTON PRESIDENTIAL CENTER

LITTLE ROCK, ARKANSAS

Architect

POLSHEK PARTNERSHIP LLP
320 West 13th Street
New York, New York 10014
212 807 7171

Coordinating Architects

POLK STANLEY YEARY ARCHITECTS Ltd
700 South Schiller Street
Little Rock, Arkansas 72201
501 378 0878

WITSELL EVANS RASCO
901 West Third Street
Little Rock, Arkansas 72201
501 374 5300

WOODS CARADINE ARCHITECTS
2200 South Main Street
Little Rock, Arkansas 72206
501 374 4060

Landscape Architects

HARGREAVES ASSOCIATES
118 Magazine Street
Cambridge, Massachusettes 02139
617 661 0070

LANDSCAPE ARCHITECTURE Inc.
2300 Cottondale Lane Suite 202
Little Rock, Arkansas 72202
501 374 5810

Structural Engineer

LESLIE E ROBERTSON ASSOC RLLP
30 Broad Street, 47th Floor
New York, New York 10004
212 750.9000

MEP Engineers

FLACK + KURTZ Inc.
475 Fifth Avenue
New York, New York 10017
212 532 9600

CROMWELL ARCHITECTS ENGINEERS
101 South Spring Street
Little Rock, Arkansas 72201
501 372 2900

Curtainwall Consultant

R A. HEINTGES ARCHITECTS
126 Fifth Avenue 9th Floor
New York, New York 10011
212 652-2966

Seal

Issue	Date
1 100% Construction Documents	09/27/02
1 90% Progress Printing	08/30/02
100% Struct./ CD Progress	07/01/02
Bridge Bldg Substructure	06/14/02
100% Design Development	03/01/02

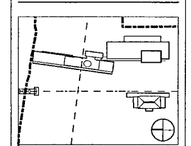

Job No 9908

Scale 1/2" = 1'-0"

Date September 27, 2002

Title

WALL SYSTEM A1
PLANS AND SECTIONS

Sheet No

A321

FOR OFFICIAL USE ONLY

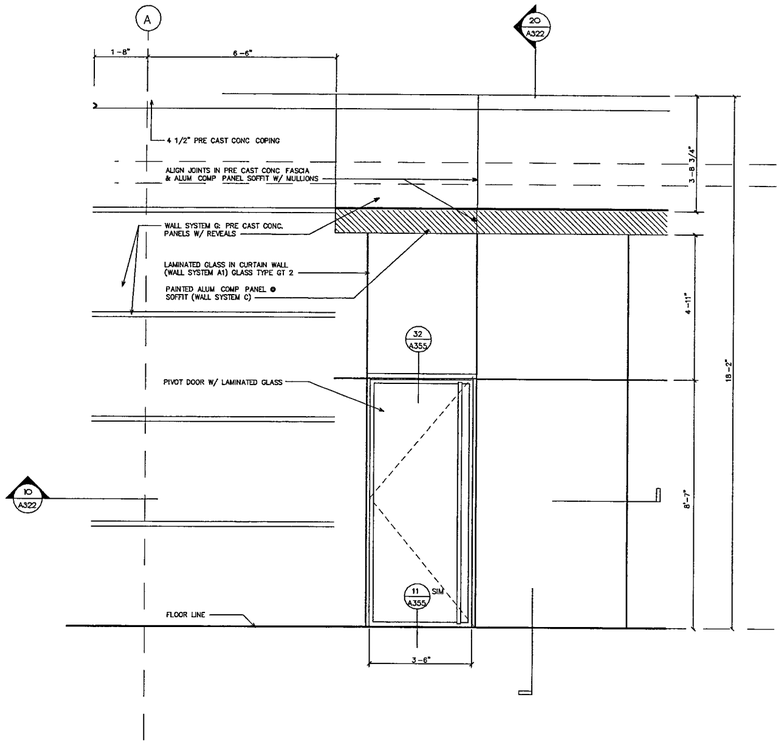

WALL SYSTEM A1 PARTIAL ELEVATIONS AT CLASSROOMS

SCALE: 1/2 " = 1'-0"

22

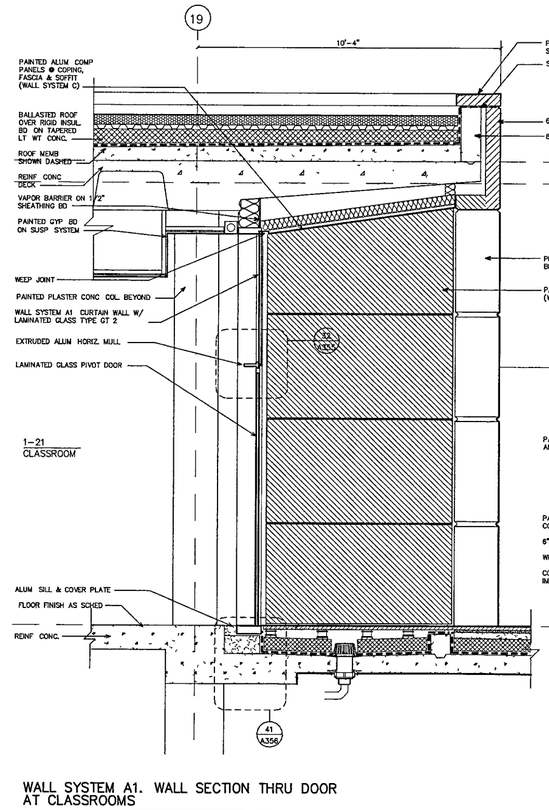

WALL SYSTEM A1. WALL SECTION THRU DOOR AT CLASSROOMS

SCALE. 1/2 " = 1'-0"

21

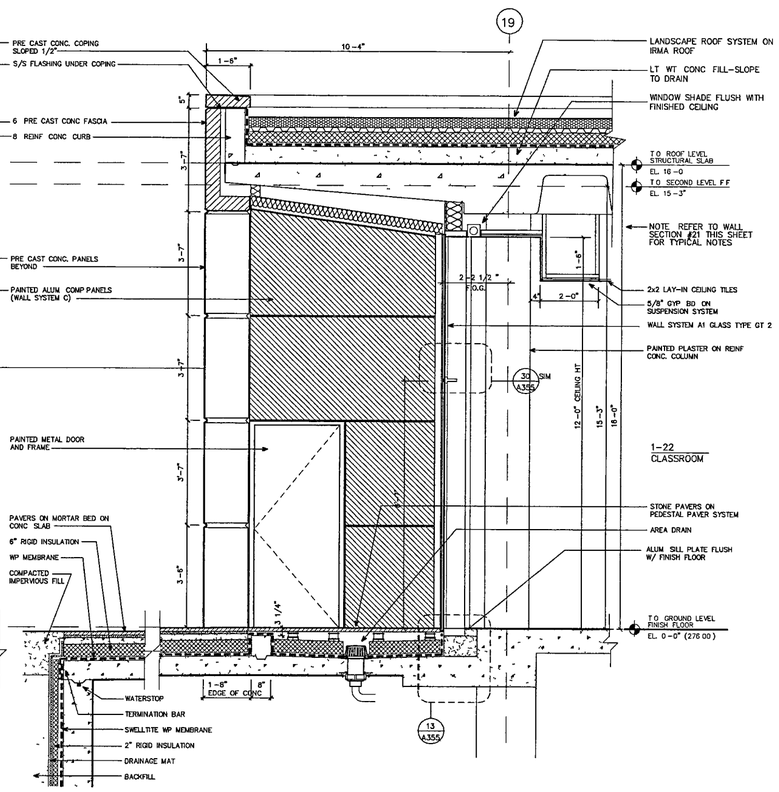

WALL SYSTEM A1. WALL SECTION AT CLASSROOMS

SCALE. 1/2 " = 1'-0"

20

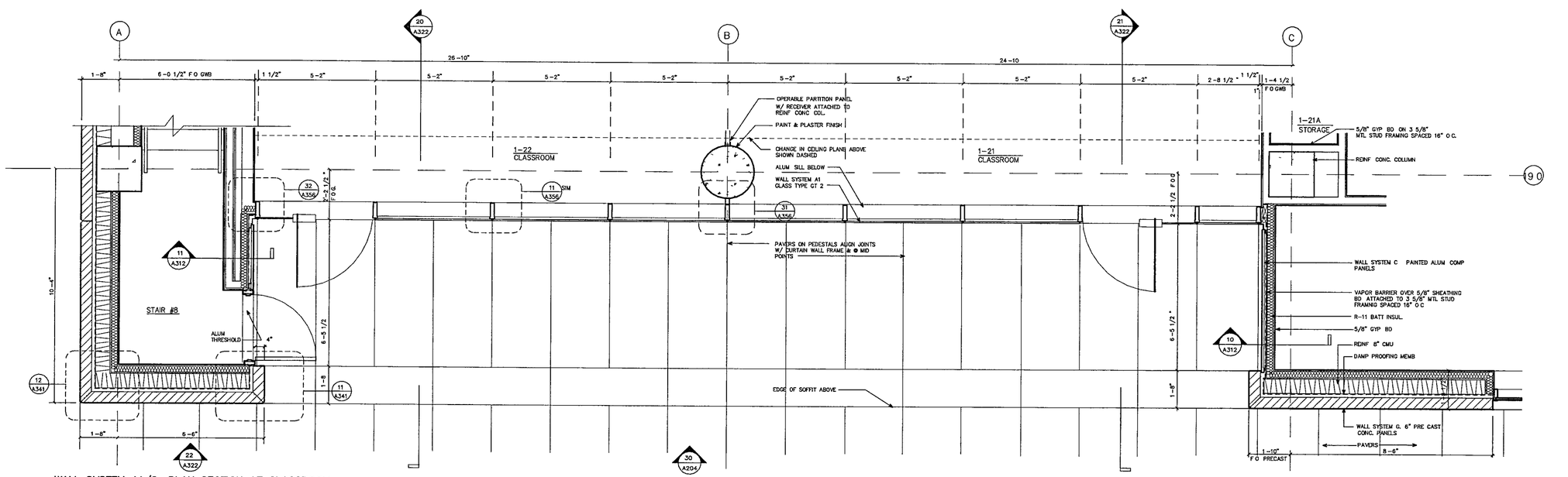

WALL SYSTEM A1/G· PLAN SECTION AT CLASSROOM

SCALE. 1/2 " = 1'-0"

10

WILLIAM J. CLINTON PRESIDENTIAL CENTER

LITTLE ROCK, ARKANSAS

Architect

POLSHEK PARTNERSHIP LLP
320 West 13th Street
New York, New York 10014
212 807 7171

Coordinating Architects

POLK STANLEY YEARY ARCHITECTS Ltd
700 South Schiller Street
Little Rock, Arkansas 72201
501.378 0878

WITSELL EVANS & RASCO
901 West Third Street
Little Rock, Arkansas 72201
501.374.5300

WOODS CARADINE ARCHITECTS
2200 South Main Street
Little Rock, Arkansas 72206
501.374.4050

Landscape Architects

HARGREAVES ASSOCIATES
118 Magazine Street
Cambridge, Massachusettes 02139
617.661 0070

LANDSCAPE ARCHITECTURE, Inc.
2300 Cottondale Lane Suite 202
Little Rock, Arkansas 72202
501.374.5610

Structural Engineer

LESLIE E. ROBERTSON ASSOC , RLLP
30 Broad Street, 47th Floor
New York, New York 10017
212 750.9000

MEP Engineers

FLACK + KURTZ Inc.
475 Fifth Avenue
New York, New York 10017
212 532.9600

CROMWELL ARCHITECTS ENGINEERS
101 South Spring Street
Little Rock, Arkansas 72201
501.372.2900

Curtainwall Consultant

R.A. HEINTGES ARCHITECTS
126 Fifth Avenue, 9th Floor
New York, New York 10011
212 652-2966

Seal

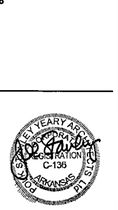

Issue	Date
100% Construction Documents	09/27/02
90% Progress Printing	08/30/02
100% Struct./CD Progress	07/01/02
100% Steel & Concrete CD	
& Architectural CD Progress	05/15/02
100% Design Development	03/01/02

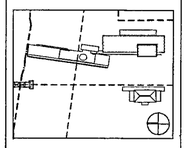

Job No. PPA. 9908 PSY 4260

Scale 1/2" = 1'-0"

Date September 27, 2002

Title

WALL SYSTEM A1: PLANS, ELEVATION AND SECTIONS

Sheet No

A322

FOR OFFICIAL USE ONLY

THURSDAY SEP 1 26 2002 11:54 AM

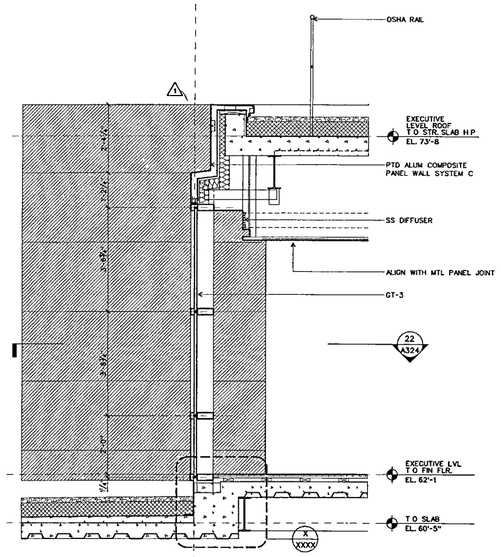

WALL SYSTEM A2: WALL SECTION AT NECK, EXEC SOUTH (23)

SCALE 1/2" = 1'-0" DETAILS/DTL-CWA4

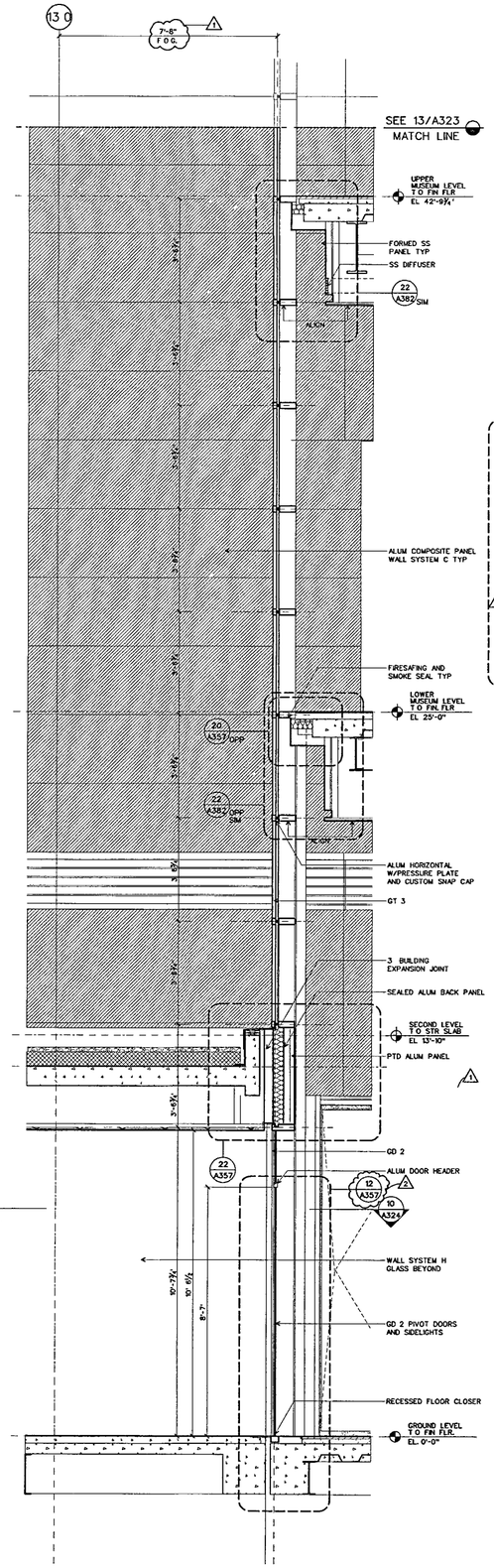

WALL SYSTEM A2: WALL SECTION AT NECK, SOUTH (12)

SCALE 1/2" = 1'-0 DETAILS/DTL-CWA4

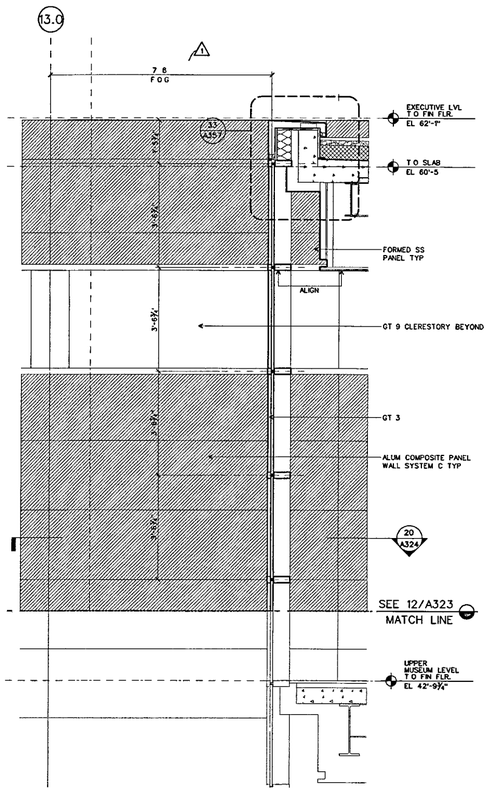

WALL SYSTEM A2: WALL SECTION AT NECK, SOUTH (13)

SCALE 1/2" = 1'-0" DETAILS/DTL-CWA4

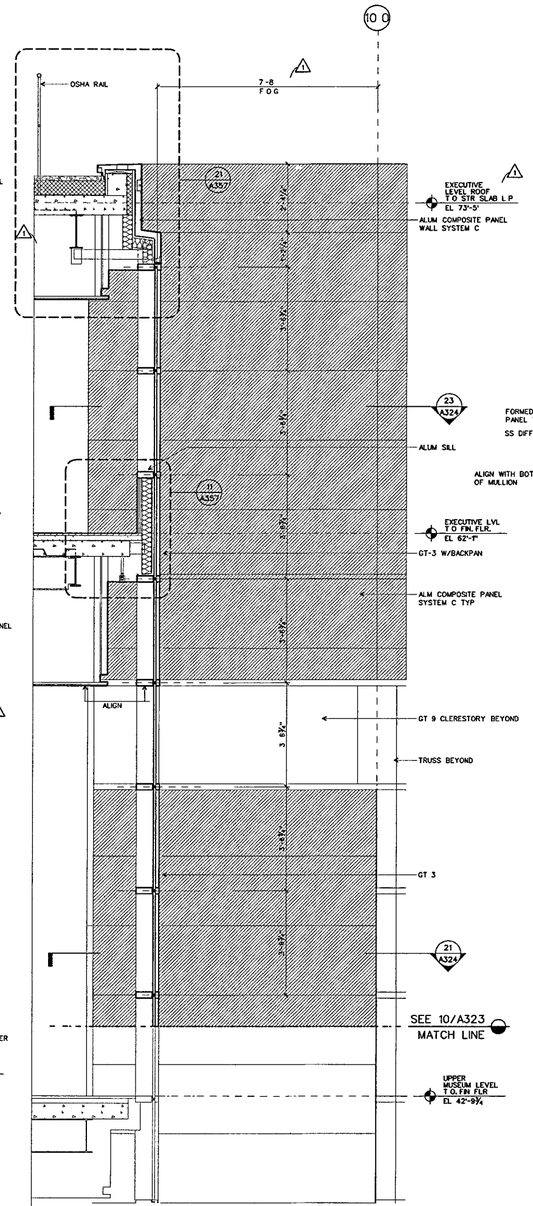

WALL SYSTEM A2: WALL SECTION AT NECK, NORTH (11)

SCALE 1/2" = 1'-0 DETAILS/DTL-CWA4

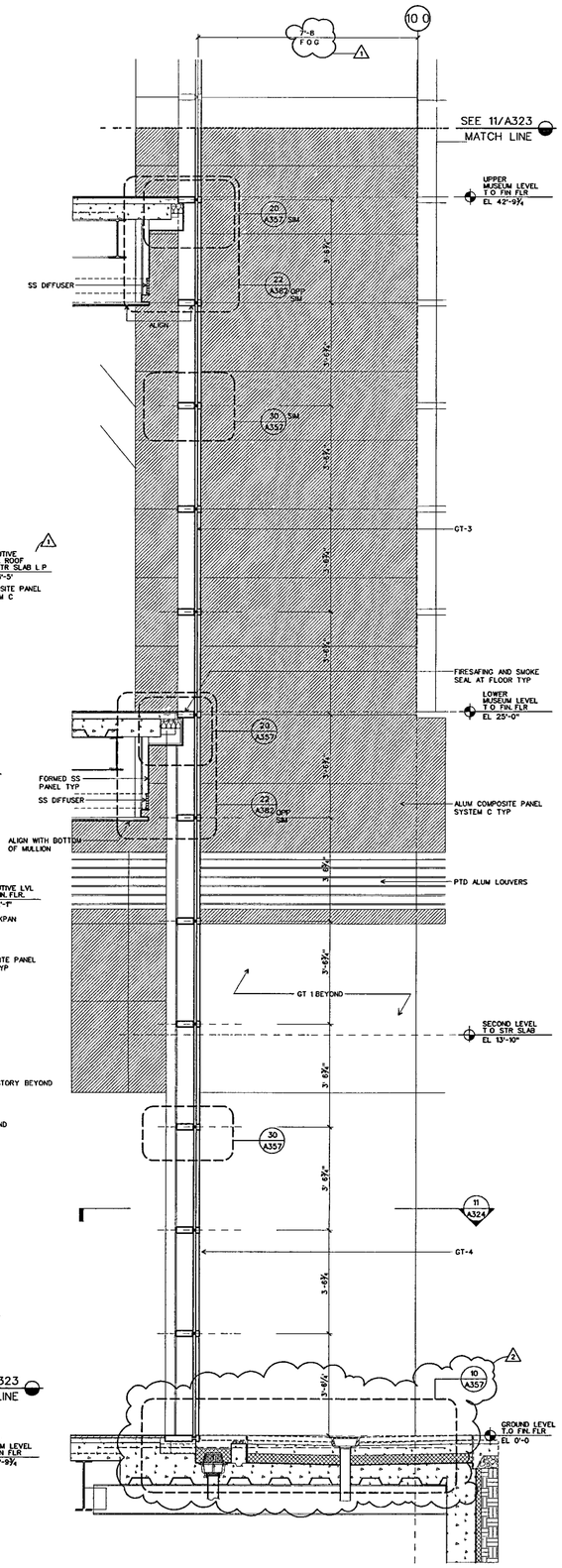

WALL SYSTEM A2: WALL SECTION AT NECK, NORTH (10)

SCALE 1/2" = 1'-0" DETAILS/DTL-CWA4

WILLIAM J CLINTON PRESIDENTIAL CENTER

LITTLE ROCK, ARKANSAS

Architect

POLSHEK PARTNERSHIP LLP
320 West 13th Street
New York New York 10014
212 807 7171

Coordinating Architects

POLK STANLEY YEARY ARCHITECTS Ltd
700 South Schiller Street
Little Rock Arkansas 72201
501 378 0878

WITSELL EVANS RASCO
901 West Third Street
Little Rock, Arkansas 72201
501 374 5300

WOODS CARADINE ARCHITECTS
2200 South Main Street
Little Rock Arkansas 72206
501 374 4060

Landscape Architects

HARGREAVES ASSOCIATES
118 Magazine Street
Cambridge Massachusettes 02139
617 661 0070

LANDSCAPE ARCHITECTURE, Inc.
2300 Cottondale Lane Suite 202
Little Rock, Arkansas 72202
501 374 5610

Structural Engineer

LESLIE E ROBERTSON ASSOC , RLLP
30 Broad Street, 47th Floor
New York, New York 10004
212 750 9000

MEP Engineers

FLACK + KURTZ Inc
475 Fifth Avenue
New York, New York 10017
212.532 9600

CROMWELL ARCHITECTS ENGINEERS
101 South Spring Street
Little Rock Arkansas 72201
501 372 2900

Curtainwall Consultant

R A. HEINTGES ARCHITECTS
126 Fifth Avenue, 9th Floor
New York, New York 10011
212 652-2966

Seal

Issue	Date
2 100% Construction Documents	09/27/02
1 90% Progress Printing	08/30/02
100% Struct/ CD Progress	07/01/02
Bridge Bldg Substructure	06/14/02
100% Design Development	03/01/02

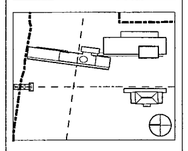

Job No 9908

Scale 1/2" = 1'-0"

Date September 27 2002

Title

WALL SYSTEM A2 SECTIONS

Sheet No

A323

FOR OFFICIAL USE ONLY

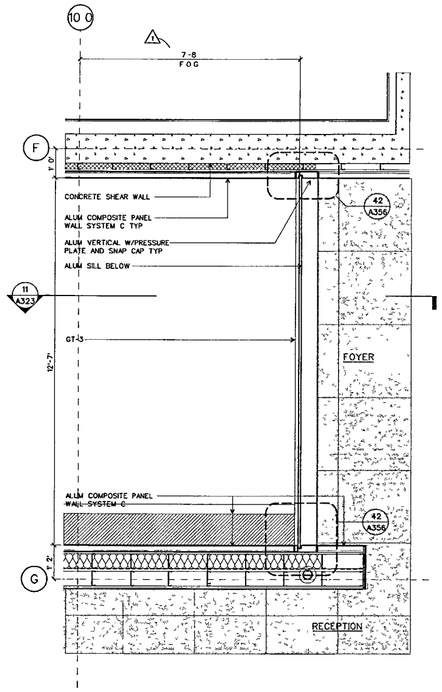

WALL SYSTEM A2: PLAN AT EXECUTIVE LEVEL 23
SCALE ½" = 1-0 DETAILS/DTL-CWA5

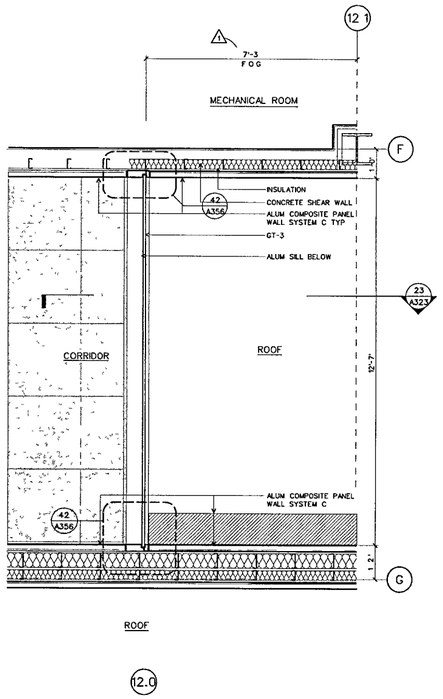

WALL SYSTEM A2: PLAN AT EXECUTIVE LEVEL 22
SCALE ½ = 1-0 DETAILS/DTL-CWA5

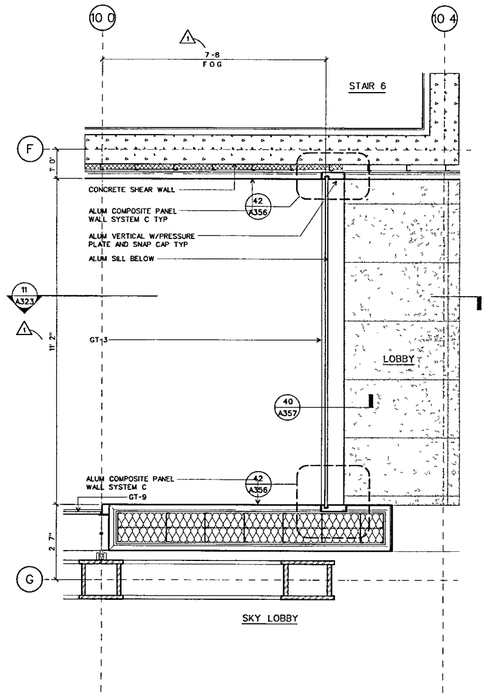

WALL SYSTEM A2: PLAN AT UPPER MUSEUM LEVEL 21
SCALE ½ = 1-0 DETAILS/DTL-CWA5

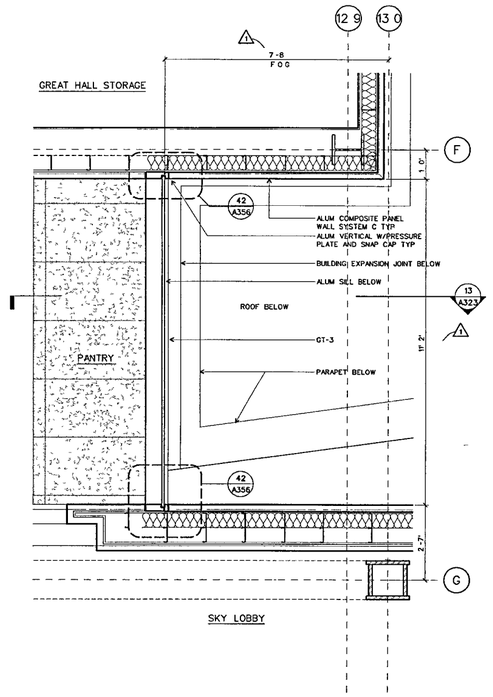

WALL SYSTEM A2: PLAN AT UPPER MUSEUM LEVEL 20
SCALE ½" = 1'-0 DETAILS/DTL-CWA5

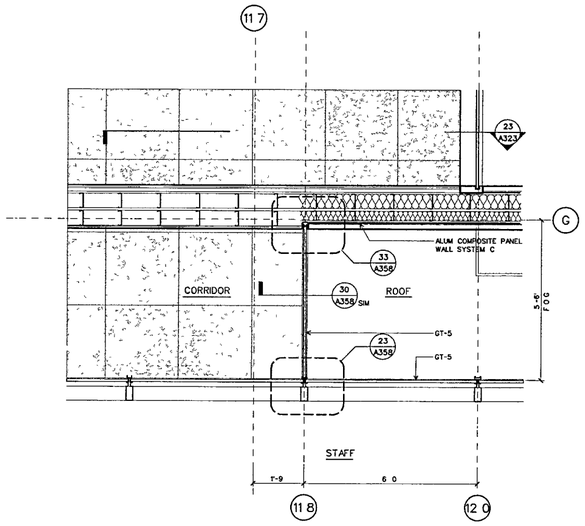

WALL SYSTEM A3: PLAN AT EXECUTIVE LEVEL 12
SCALE ½" = 1-0 DETAILS/DTL-CWA5

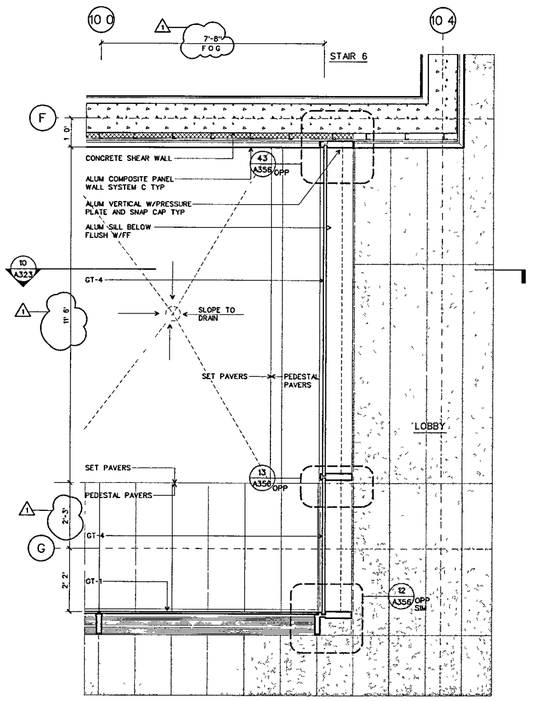

WALL SYSTEM A2: PLAN AT GROUND LEVEL 11
SCALE ½ = 1-0 DETAILS/DTL-CWA5

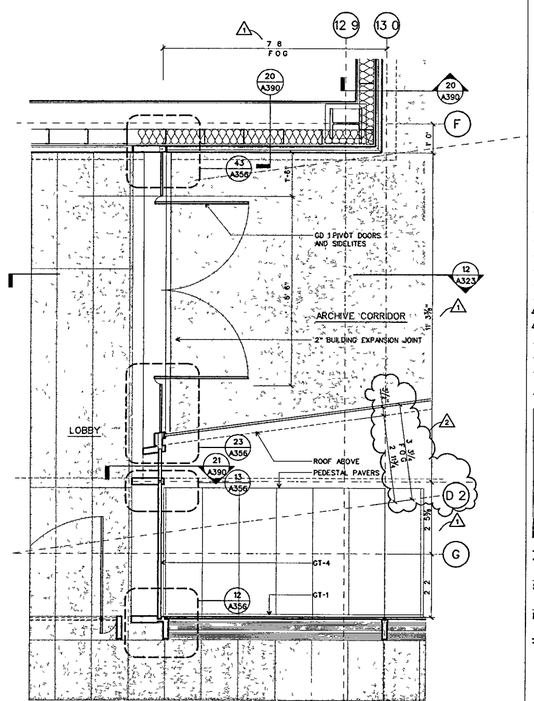

WALL SYSTEM A2: PLAN AT GROUND LEVEL 10
SCALE ½" = 1-0" DETAILS/DTL-CWA5

WILLIAM J CLINTON PRESIDENTIAL CENTER

LITTLE ROCK, ARKANSAS

Architect
POLSHEK PARTNERSHIP LLP
320 West 13th Street
New York, New York 10014
212 807 7171

Coordinating Architects
POLK STANLEY YEARY ARCHITECTS Ltd
700 South Schiller Street
Little Rock Arkansas 72201
501 378 0878

WITSELL EVANS RASCO
901 West Third Street
Little Rock, Arkansas 72201
501 374 5300

WOODS CARADINE ARCHITECTS
2200 South Main Street
Little Rock, Arkansas 72206
501 374 4060

Landscape Architects
HARGREAVES ASSOCIATES
118 Magazine Street
Cambridge Massachusettes 02139
617 661 0070

LANDSCAPE ARCHITECTURE, Inc.
2300 Cottondale Lane Suite 202
Little Rock, Arkansas 72202
501 374 5610

Structural Engineer
LESLIE E. ROBERTSON ASSOC., RLLP
30 Broad Street, 47th Floor
New York, New York 10004
212 750 9000

MEP Engineers
FLACK + KURTZ Inc.
475 Fifth Avenue
New York, New York 10017
212.532 9600

CROMWELL ARCHITECTS ENGINEERS
101 South Spring Street
Little Rock, Arkansas 72201
501 372 2900

Curtainwall Consultant
R. A. HEINTGES ARCHITECTS
126 Fifth Avenue, 9th Floor
New York, New York 10011
212 652-2966

Seal

RICHARD OLCOTT ARCHITECT 3405 ARKANSAS

Issue	Date
100% Construction Documents	09/27/02
90% Progress Printing	08/30/02
100% Struct./ CD Progress	07/01/02
Bridge Bldg Substructure	06/14/02
100% Design Development	03/01/02

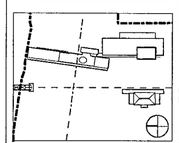

Job No: 9908

Scale: 1/2" = 1'-0"

Date: September 27 2002

Title: WALL SYSTEM A2 AND A3 PLANS

Sheet No: **A324**

FOR OFFICIAL USE ONLY

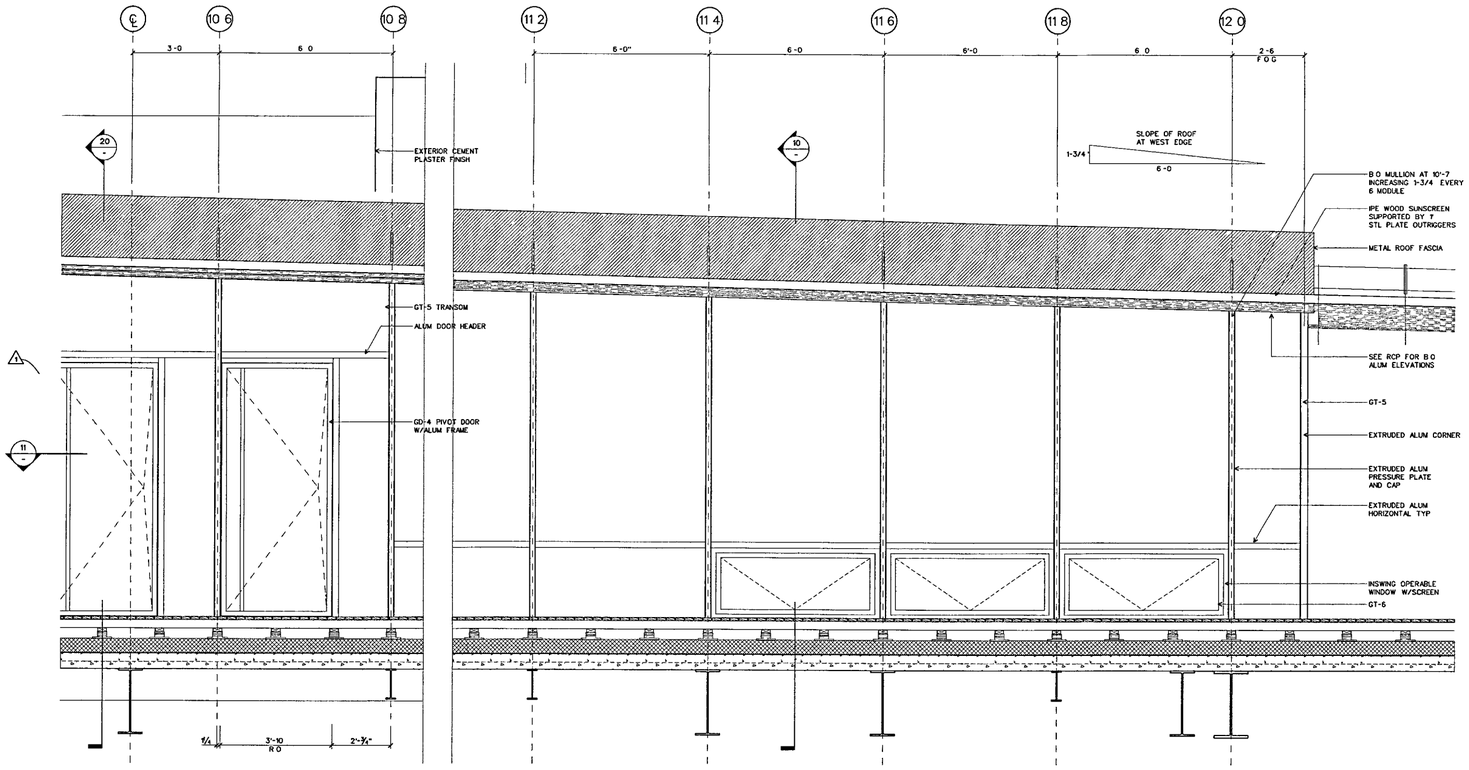

WALL SYSTEM A3 ELEVATION AT SOUTHWEST CORNER

SCALE 1/2" = 1'-0"

DETAILS/DTL-CWA6 21

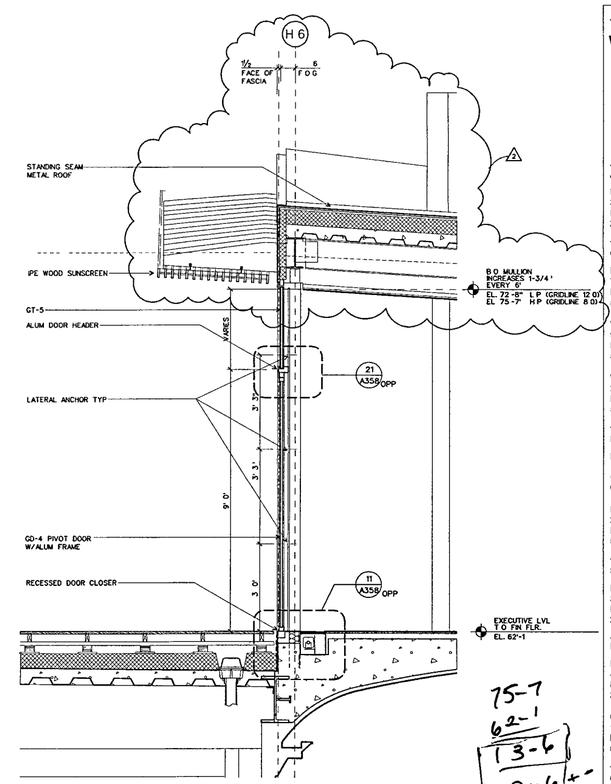

WALL SYSTEM A3: WALL SECTION THRU OVAL

SCALE 1/2" = 1-0

DETAILS/DTL-CWA6 20

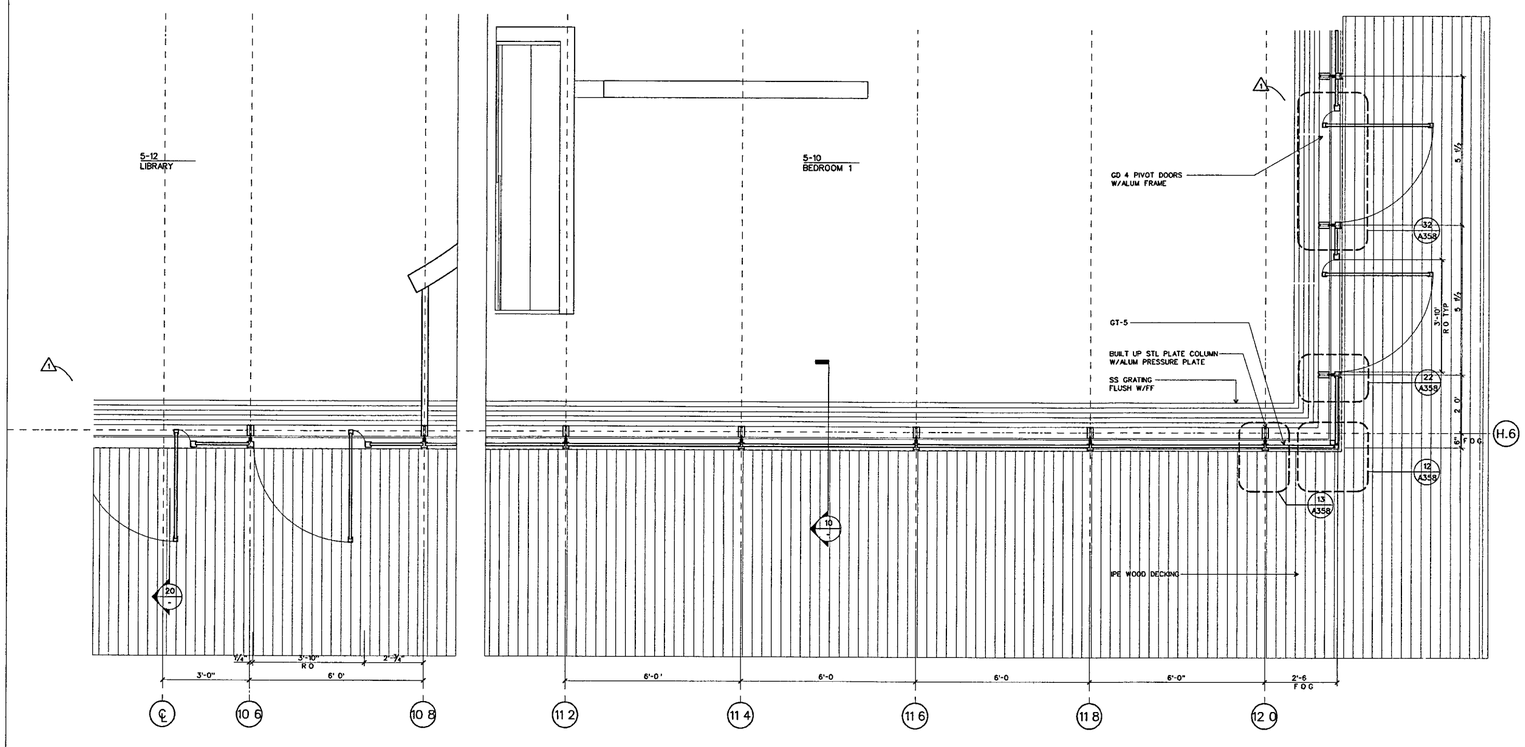

WALL SYSTEM A3: PLAN SECTION AT SOUTHWEST CORNER

SCALE 1/2" = 1-0

DETAILS/DTL-CWA6 11

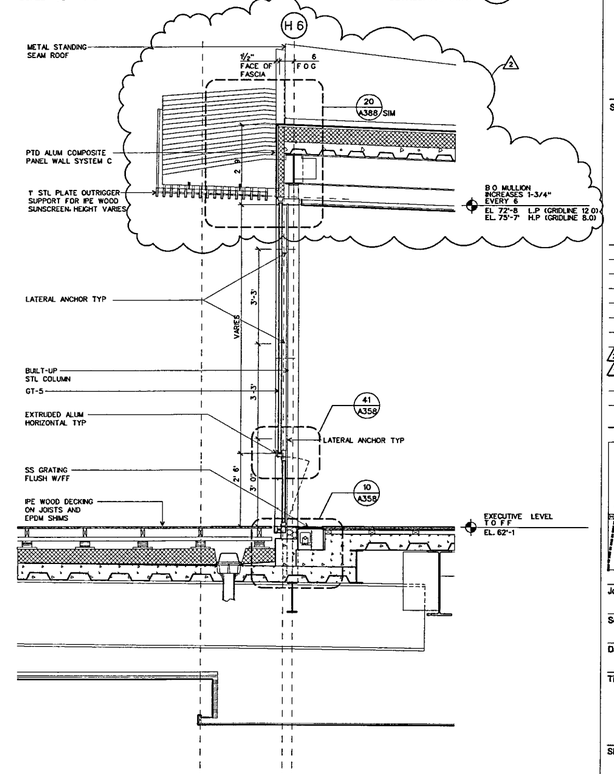

WALL SYSTEM A3: WALL SECTION, TYP

SCALE 1/2" = 1'-0

DETAILS/DTL-CWA6 10

WILLIAM J CLINTON PRESIDENTIAL CENTER

LITTLE ROCK, ARKANSAS

Architect

POLSHEK PARTNERSHIP LLP
320 West 13th Street
New York, New York 10014
212 807 7171

Coordinating Architects

POLK STANLEY YEARY ARCHITECTS Ltd
700 South Schiller Street
Little Rock, Arkansas 72201
501 378 0878

WITSELL EVANS RASCO
901 West Third Street
Little Rock, Arkansas 72201
501 374 5300

WOODS CARADINE ARCHITECTS
2200 South Main Street
Little Rock, Arkansas 72206
501 374 4060

Landscape Architects

HARGREAVES ASSOCIATES
118 Magazine Street
Cambridge Massachusettes 02139
617 661 0070

LANDSCAPE ARCHITECTURE, Inc.
2300 Cottondale Lane Suite 202
Little Rock, Arkansas 72202
501 374 5610

Structural Engineer

LESLIE E ROBERTSON ASSOC RLLP
30 Broad Street, 47th Floor
New York, New York 10004
212 750 9000

MEP Engineers

FLACK + KURTZ Inc.
475 Fifth Avenue
New York, New York 10017
212 532 9600

CROMWELL ARCHITECTS ENGINEERS
101 South Spring Street
Little Rock, Arkansas 72201
501 372 2900

Curtainwall Consultant

R. A. HEINTGES ARCHITECTS
126 Fifth Avenue, 9th Floor
New York, New York 10011
212.652-2966

Seal

RICHARD OLCOTT REGISTERED ARCHITECT 3405 ARKANSAS

Issue	Date
3 100% Construction Documents	09/27/02
1 90% Progress Printing	08/30/02
100% Struct./ CD Progress	07/01/02
100% Design Development	03/01/02

Job No 9908

Scale 1/2" = 1'-0"

Date September 27, 2002

Title WALL SYSTEM A3 PLAN, ELEVATION, AND SECTIONS

Sheet No A325

FOR OFFICIAL USE ONLY

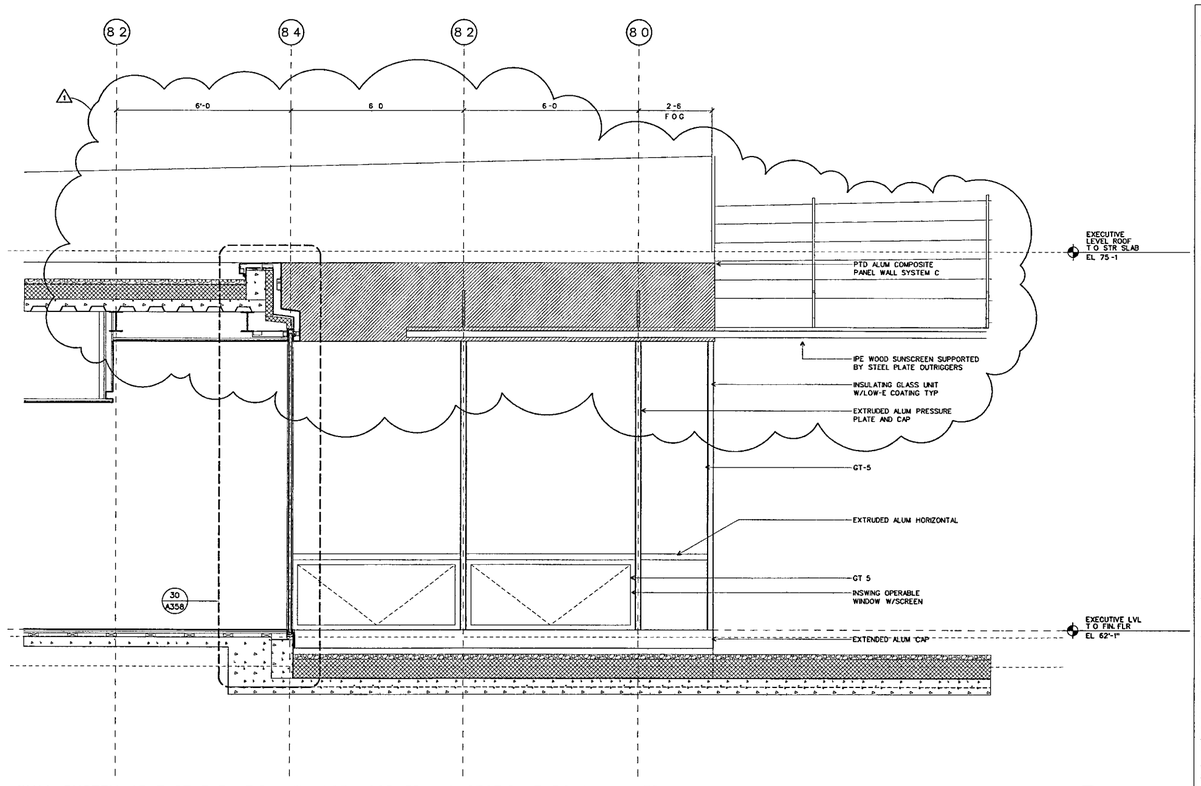

WALL SYSTEM A3: EAST ELEVATION AT NORTH CORNER AND SECTION THROUGH GALLERY

SCALE ½' = 1-0

DETAILS/DTL-CWA7 20

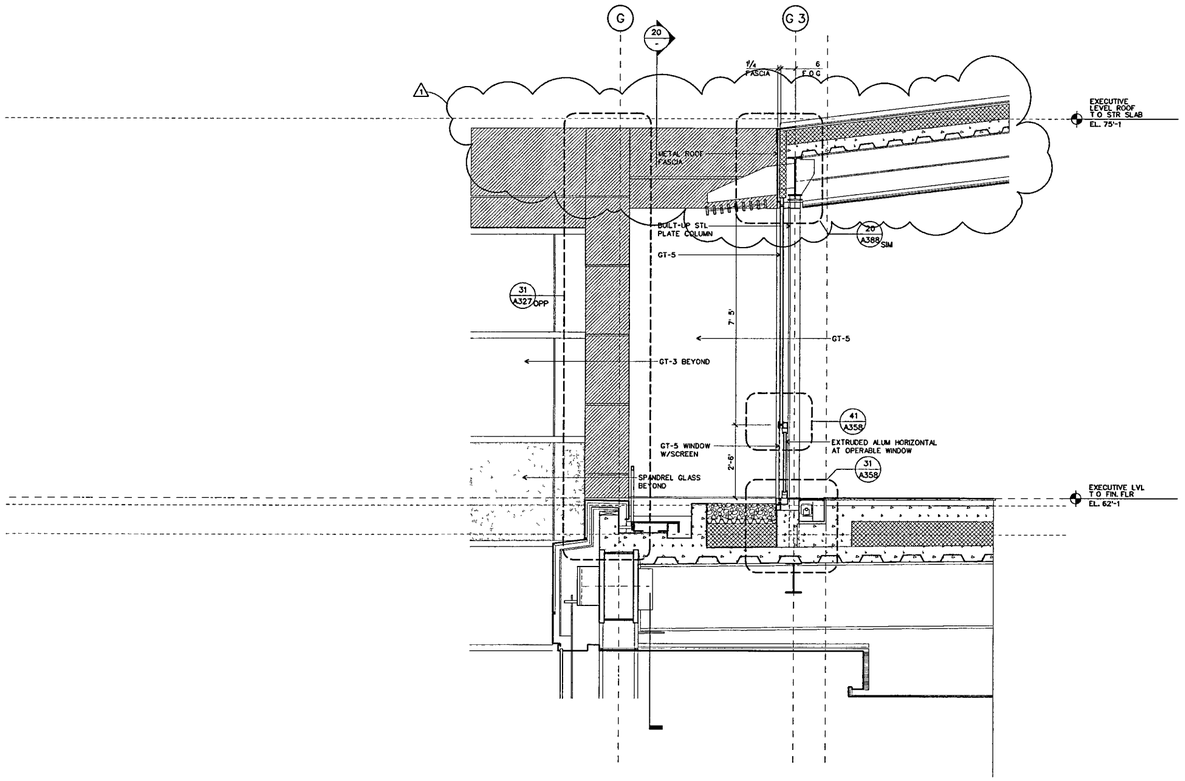

WALL SYSTEM A3: WALL SECTION THRU WINDOW

SCALE ½ = 1-0

DETAILS/DTL-CWA7 10

WILLIAM J CLINTON PRESIDENTIAL CENTER

LITTLE ROCK, ARKANSAS

Architect

POLSHEK PARTNERSHIP LLP
320 West 13th Street
New York, New York 10014
212 807 7171

Coordinating Architects

POLK STANLEY YEARY ARCHITECTS Ltd
700 South Schiller Street
Little Rock, Arkansas 72201
501 378 0878

WITSELL EVANS RASCO
901 West Third Street
Little Rock, Arkansas 72201
501 374 5300

WOODS CARADINE ARCHITECTS
2200 South Main Street
Little Rock Arkansas 72206
501 374 4060

Landscape Architects

HARGREAVES ASSOCIATES
118 Magazine Street
Cambridge Massachusettes 02139
617 661 0070

LANDSCAPE ARCHITECTURE Inc
2300 Cottondale Lane Suite 202
Little Rock Arkansas 72202
501 374 5610

Structural Engineer

LESLIE E. ROBERTSON ASSOC , RLLP
30 Broad Street, 47th Floor
New York, New York 10004
212 750 9000

MEP Engineers

FLACK + KURTZ Inc
475 Fifth Avenue
New York, New York 10017
212 532 9600

CROMWELL ARCHITECTS ENGINEERS
101 South Spring Street
Little Rock, Arkansas 72201
501 372 2900

Curtainwall Consultant

R A. HEINTGES ARCHITECTS
126 Fifth Avenue, 9th Floor
New York, New York 10011
212.652-2966

Seal

Issue	Date
100% Construction Documents	09/27/02
100% Struct./ CD Progress	07/01/02
100% Design Development	03/01/02

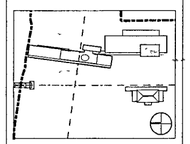

Job No 9908

Scale 1-1/2" = 1'-0"

Date September 27, 2002

Title WALL SYSTEM A3 ELEVATION AND SECTIONS

Sheet No A325a

FOR OFFICIAL USE ONLY

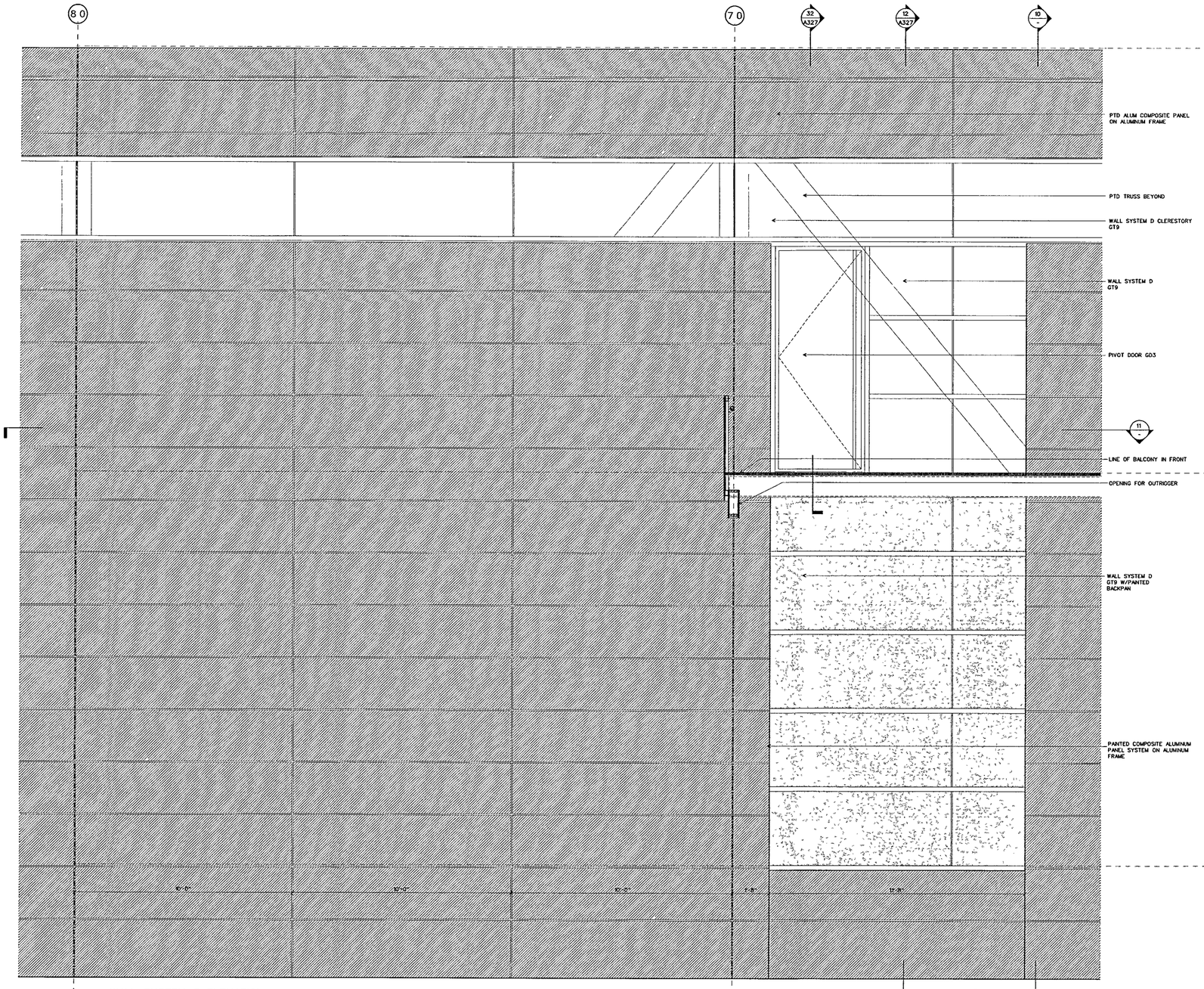

WALL SYSTEM C: ELEVATION

SCALE ½" = 1'-0"

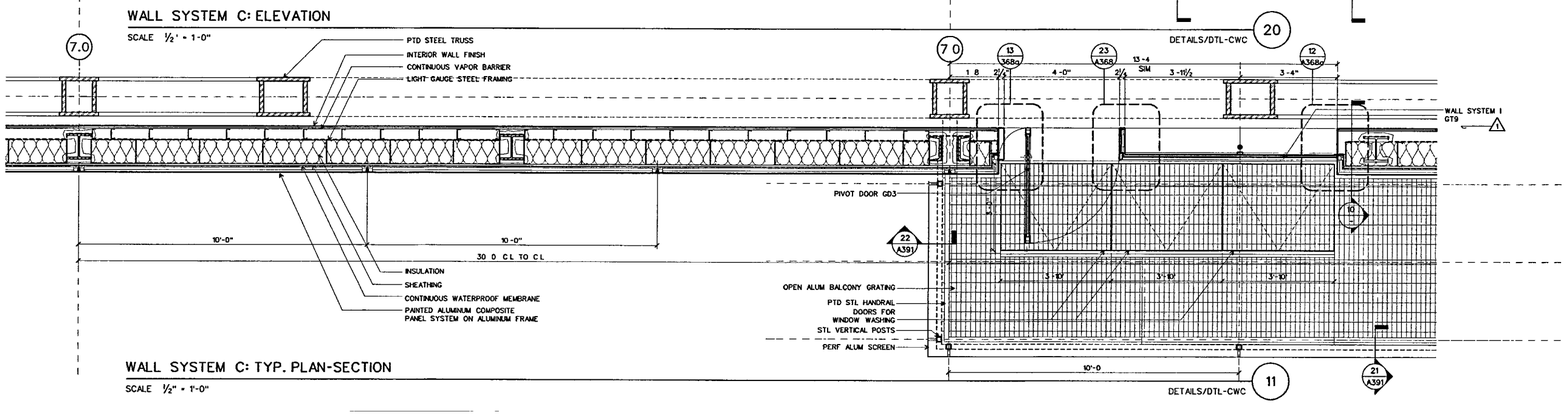

WALL SYSTEM C: TYP. PLAN-SECTION

SCALE ½" = 1'-0"

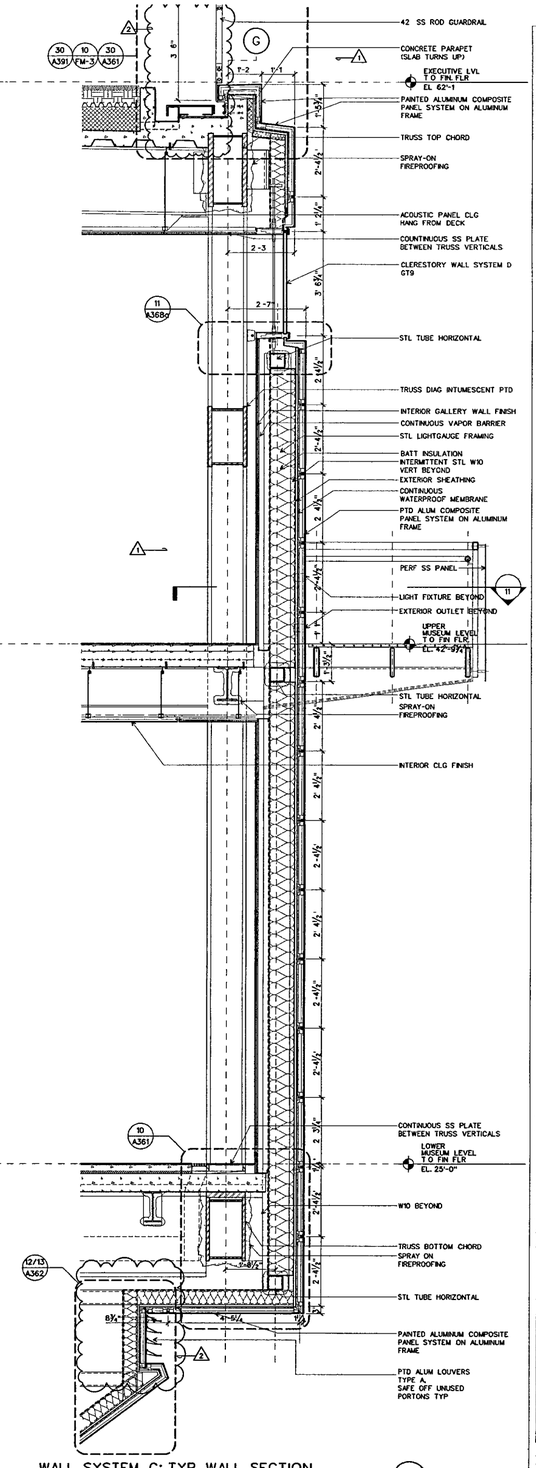

WALL SYSTEM C: TYP. WALL SECTION

SCALE ½" = 1'-0

DETAILS/DTL-CWC 10

WILLIAM J CLINTON PRESIDENTIAL CENTER

LITTLE ROCK, ARKANSAS

Architect

POLSHEK PARTNERSHIP LLP
320 West 13th Street
New York, New York 10014
212.807 7171

Coordinating Architects

POLK STANLEY YEARY ARCHITECTS Ltd
700 South Schiller Street
Little Rock, Arkansas 72201
501 378 0878

WITSELL EVANS RASCO
901 West Third Street
Little Rock, Arkansas 72201
501 374 5300

WOODS CARADINE ARCHITECTS
2200 South Main Street
Little Rock, Arkansas 72206
501 374 4060

Landscape Architects

HARGREAVES ASSOCIATES
118 Magazine Street
Cambridge Massachusettes 02139
617 661 0070

LANDSCAPE ARCHITECTURE, Inc.
2300 Cottondale Lane Suite 202
Little Rock, Arkansas 72202
501 374 5610

Structural Engineer

LESLIE E. ROBERTSON ASSOC , RLLP
30 Broad Street, 47th Floor
New York, New York 10004
212.750 9000

MEP Engineers

FLACK + KURTZ Inc
475 Fifth Avenue
New York, New York 10017
212.532.9600

CROMWELL ARCHITECTS ENGINEERS
101 South Spring Street
Little Rock, Arkansas 72201
501 372.2900

Curtainwall Consultant

R. A. HEINTGES ARCHITECTS
126 Fifth Avenue 9th Floor
New York, New York 10011
212.652-2966

Seal

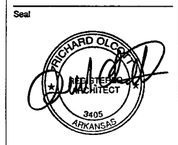

Issue	Date
100% Construction Documents	09/27/02
90% Progress Printing	08/30/02
100% Struct./ CD Progress	07/01/02
100% Design Development	03/01/02

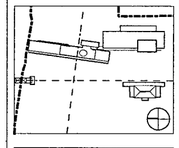

Job No 9908

Scale 1/2" = 1'-0"

Date September 27, 2002

Title WALL SYSTEM C ELEVATION, PLAN AND SECTION

Sheet No A326

FOR OFFICIAL USE ONLY

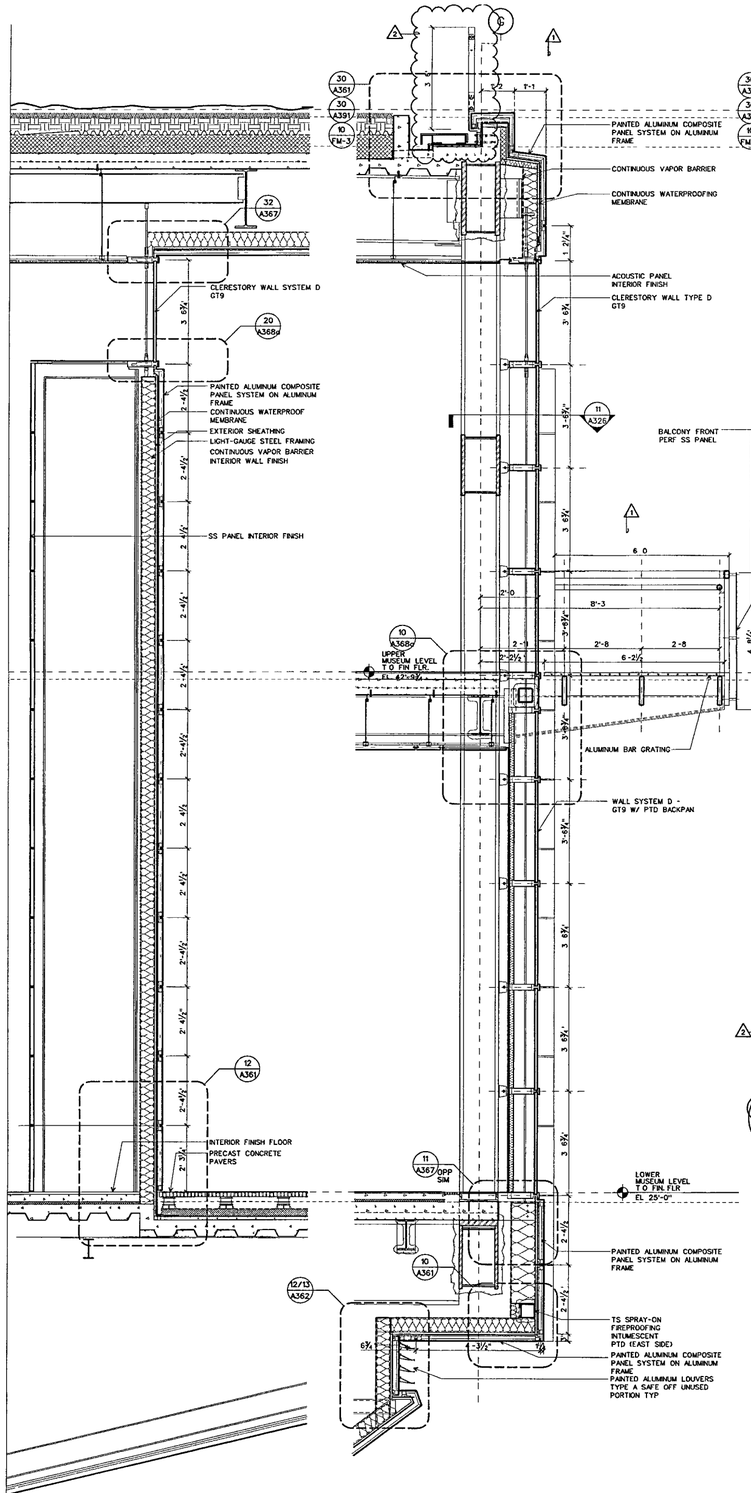

WALL SYSTEM C- WALL SECTION @ SOUTH RETURNING WALL 13
SCALE ½" - 1'-0" DETAILS/DTL-CWC2

WALL SYSTEM C: WALL SECTION @ BALCONY 12
SCALE ½ - 1'-0" DETAILS/DTL-CWC2

WALL SYSTEM C: WALL SECTION @ DOOR/EAST BALCONY 32
SCALE ½ - 1'-0" DETAILS/DTL-CWC2

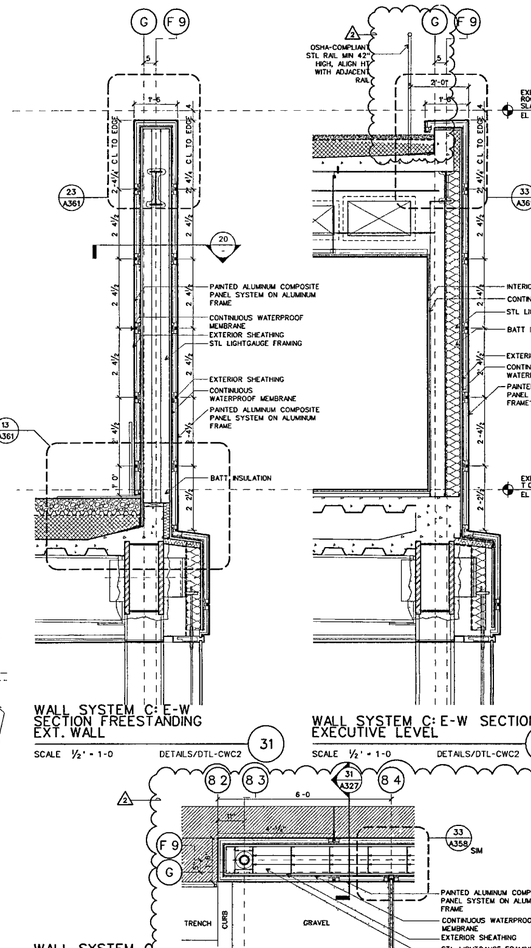

WALL SYSTEM C: E-W SECTION FREESTANDING EXT. WALL 31
SCALE ½' - 1-0 DETAILS/DTL-CWC2

WALL SYSTEM C: E-W SECTION, EXECUTIVE LEVEL 30
SCALE ½' - 1-0 DETAILS/DTL-CWC2

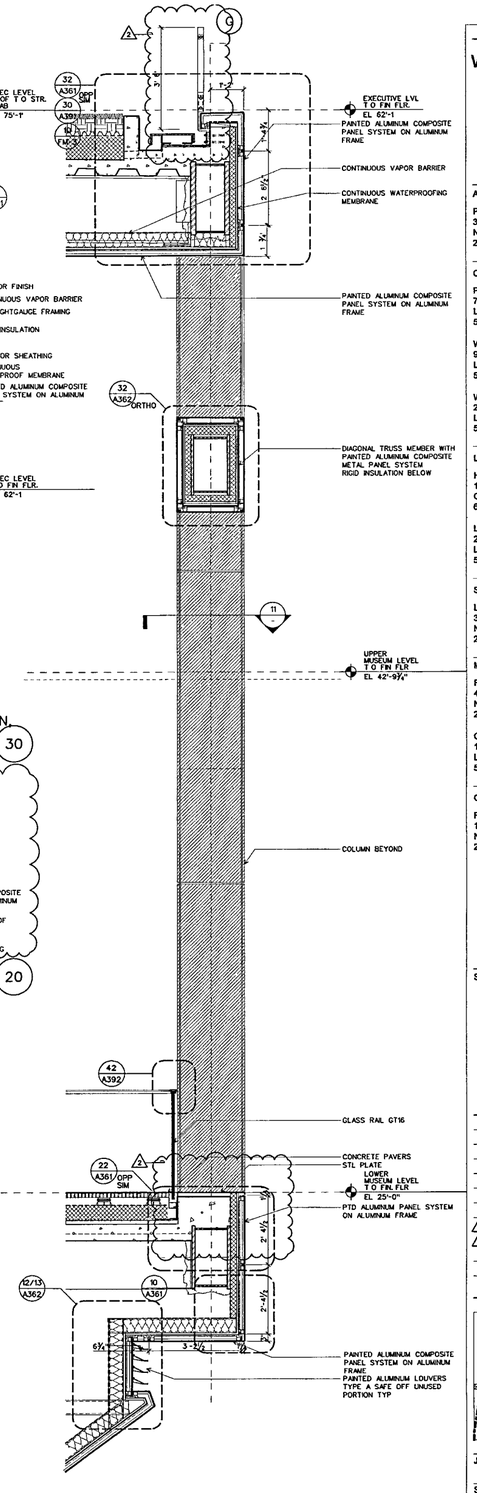

WALL SYSTEM C: WALL SECTION @ COLUMN COVER 10
SCALE ½" - 1'-0' DETAILS/DTL-CWC2

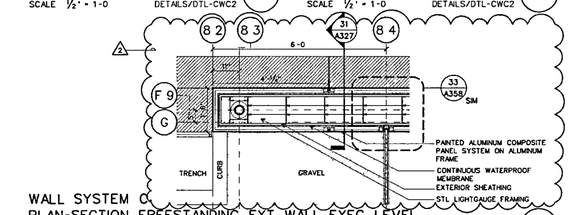

WALL SYSTEM C PLAN-SECTION FREESTANDING EXT. WALL EXEC. LEVEL 20
SCALE ½" - 1-0 DETAILS/DTL-CWC2

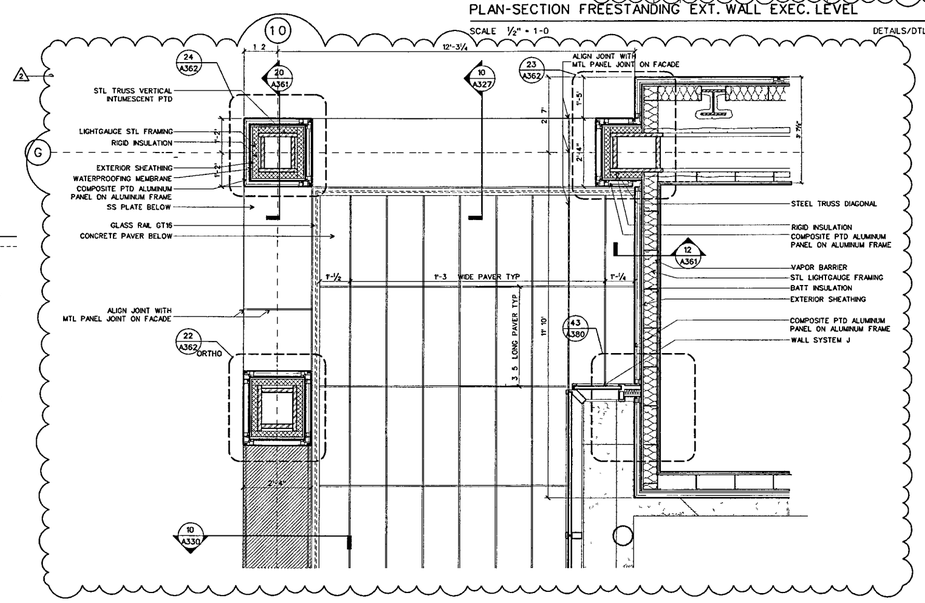

WALL SYSTEM C: WALL SECTION @ WINDOW/BALCONY 11
SCALE ½" - 1'-0" DETAILS/DTL-CWC2

WILLIAM J CLINTON PRESIDENTIAL CENTER

LITTLE ROCK, ARKANSAS

Architect

POLSHEK PARTNERSHIP LLP
320 West 13th Street
New York, New York 10014
212.807 7171

Coordinatng Architects

POLK STANLEY YEARY ARCHITECTS Ltd
700 South Schiller Street
Little Rock Arkansas 72201
501 378 0878

WITSELL EVANS RASCO
901 West Third Street
Little Rock, Arkansas 72201
501 374 5300

WOODS CARADINE ARCHITECTS
2200 South Main Street
Little Rock Arkansas 72206
501 374 4060

Landscape Architects

HARGREAVES ASSOCIATES
118 Magazine Street
Cambridge Massachusettes 02139
617 661 0070

LANDSCAPE ARCHITECTURE, Inc.
2300 Cottondale Lane Suite 202
Little Rock, Arkansas 72202
501 374 5810

Structural Engineer

LESLIE E ROBERTSON ASSOC , RLLP
30 Broad Street, 47th Floor
New York New York 10004
212.750 9000

MEP Engineers

FLACK + KURTZ Inc.
475 Fifth Avenue
New York, New York 10017
212 532 9600

CROMWELL ARCHITECTS ENGINEERS
101 South Spring Street
Little Rock, Arkansas 72201
501 372.2900

Curtainwall Consultant

R A. HEINTGES ARCHITECTS
126 Fifth Avenue, 9th Floor
New York, New York 10011
212 652-2966

Seal

Issue	Date
100% Construction Documents	09/27/02
90% Progress Printing	08/30/02
100% Struct./ CD Progress	07/01/02
100% Design Development	03/01/02

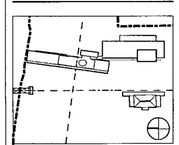

Job No 9908

Scale 1/2" = 1'-0"

Date September 27, 2002

Title

WALL SYSTEM C
PLANS AND SECTIONS

Sheet No

A327

FOR OFFICIAL USE ONLY

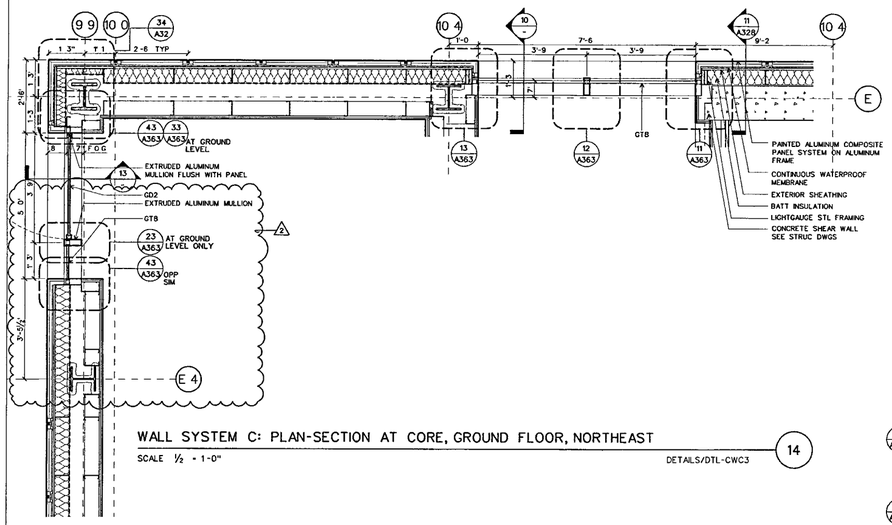

WALL SYSTEM C: PLAN-SECTION AT CORE, GROUND FLOOR, NORTHEAST (14)

SCALE ½ = 1'-0" DETAILS/DTL-CWC3

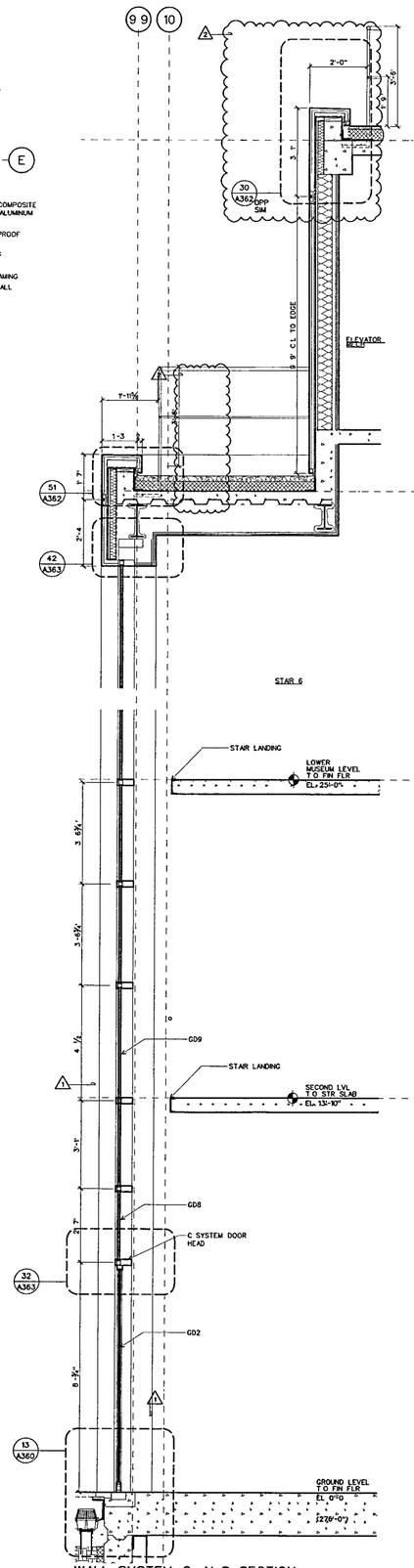

WALL SYSTEM C' N-S SECTION, CORE BUILDING, AT GLAZING (13)

SCALE ½ = 1'-0" DETAILS/DTL-CWC3

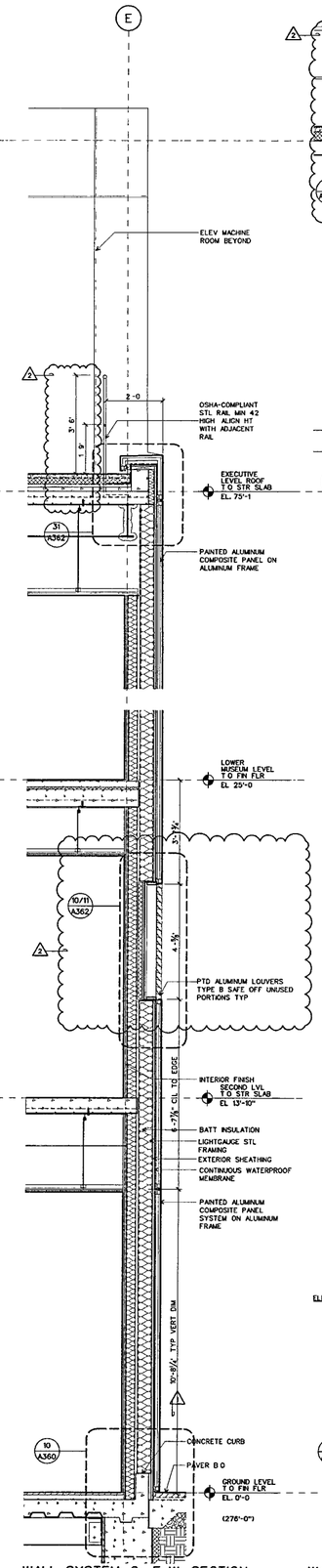

WALL SYSTEM C' E-W SECTION CORE BDG. AT MTL. PANEL (12)

SCALE ½' = 1'-0' DETAILS/DTL-CWC3

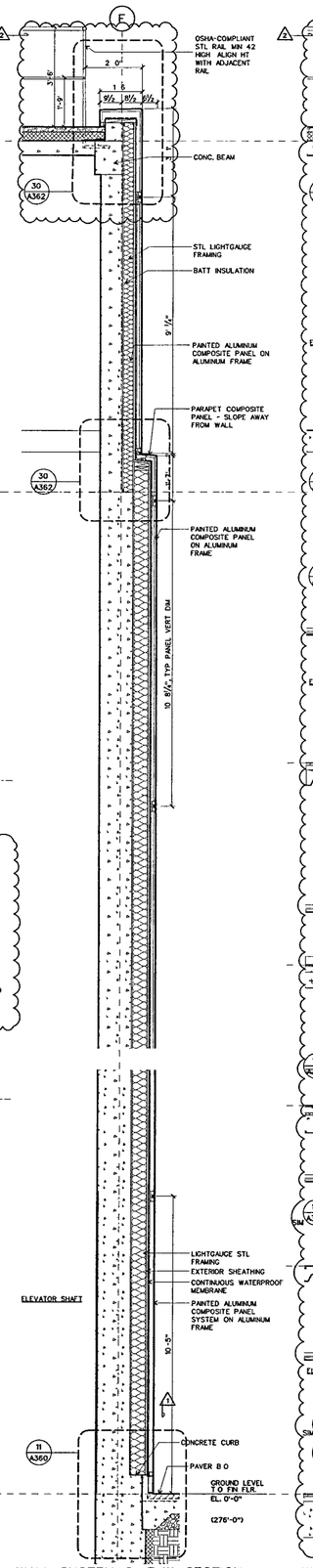

WALL SYSTEM C' E-W SECTION CORE BLDG. AT SHEAR WALL (11)

SCALE ½' = 1'-0" DETAILS/DTL-CWC3

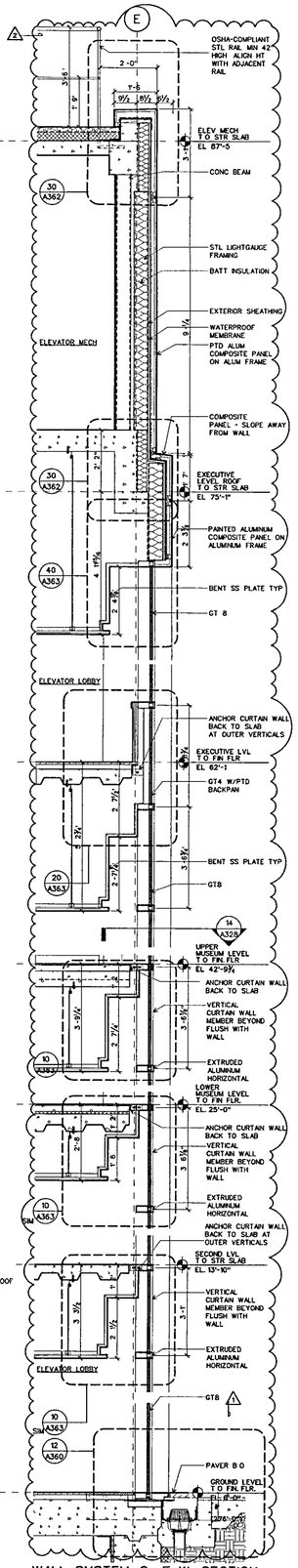

WALL SYSTEM C' E-W SECTION CORE BLDG. AT GLAZING (10)

SCALE ½ = 1-0 DETAILS/DTL-CWC3

WILLIAM J CLINTON PRESIDENTIAL CENTER

LITTLE ROCK, ARKANSAS

Architect

POLSHEK PARTNERSHIP LLP
320 West 13th Street
New York, New York 10014
212 807 7171

Coordinating Architects

POLK STANLEY YEARY ARCHITECTS Ltd
700 South Schiller Street
Little Rock Arkansas 72201
501 378 0878

WITSELL EVANS RASCO
901 West Third Street
Little Rock, Arkansas 72201
501 374 5300

WOODS CARADINE ARCHITECTS
2200 South Main Street
Little Rock, Arkansas 72206
501 374 4060

Landscape Architects

HARGREAVES ASSOCIATES
118 Magazine Street
Cambridge Massachusettes 02139
617 661 0070

LANDSCAPE ARCHITECTURE Inc.
2300 Cottondale Lane Suite 202
Little Rock, Arkansas 72202
501 374 5610

Structural Engineer

LESLIE E ROBERTSON ASSOC , RLLP
30 Broad Street, 47th Floor
New York, New York 10004
212 750 9000

MEP Engineers

FLACK + KURTZ Inc.
475 Fifth Avenue
New York, New York 10017
212.532 9600

CROMWELL ARCHITECTS ENGINEERS
101 South Spring Street
Little Rock, Arkansas 72201
501 372 2900

Curtainwall Consultant

R. A. HEINTGES ARCHITECTS
126 Fifth Avenue 9th Floor
New York, New York 10011
212 652-2966

Seal

RICHARD OLCOTT REGISTERED ARCHITECT 3405 ARKANSAS

Issue	Date
100% Construction Documents	09/27/02
90% Progress Printing	08/30/02
100% Struct./ CD Progress	07/01/02
Bridge Bldg Substructure	06/14/02
100% Design Development	03/01/02

Job No 9908

Scale 1/2" = 1'-0"

Date September 27, 2002

Title

WALL SYSTEM C
PLAN AND SECTIONS

Sheet No

A328

FOR OFFICIAL USE ONLY

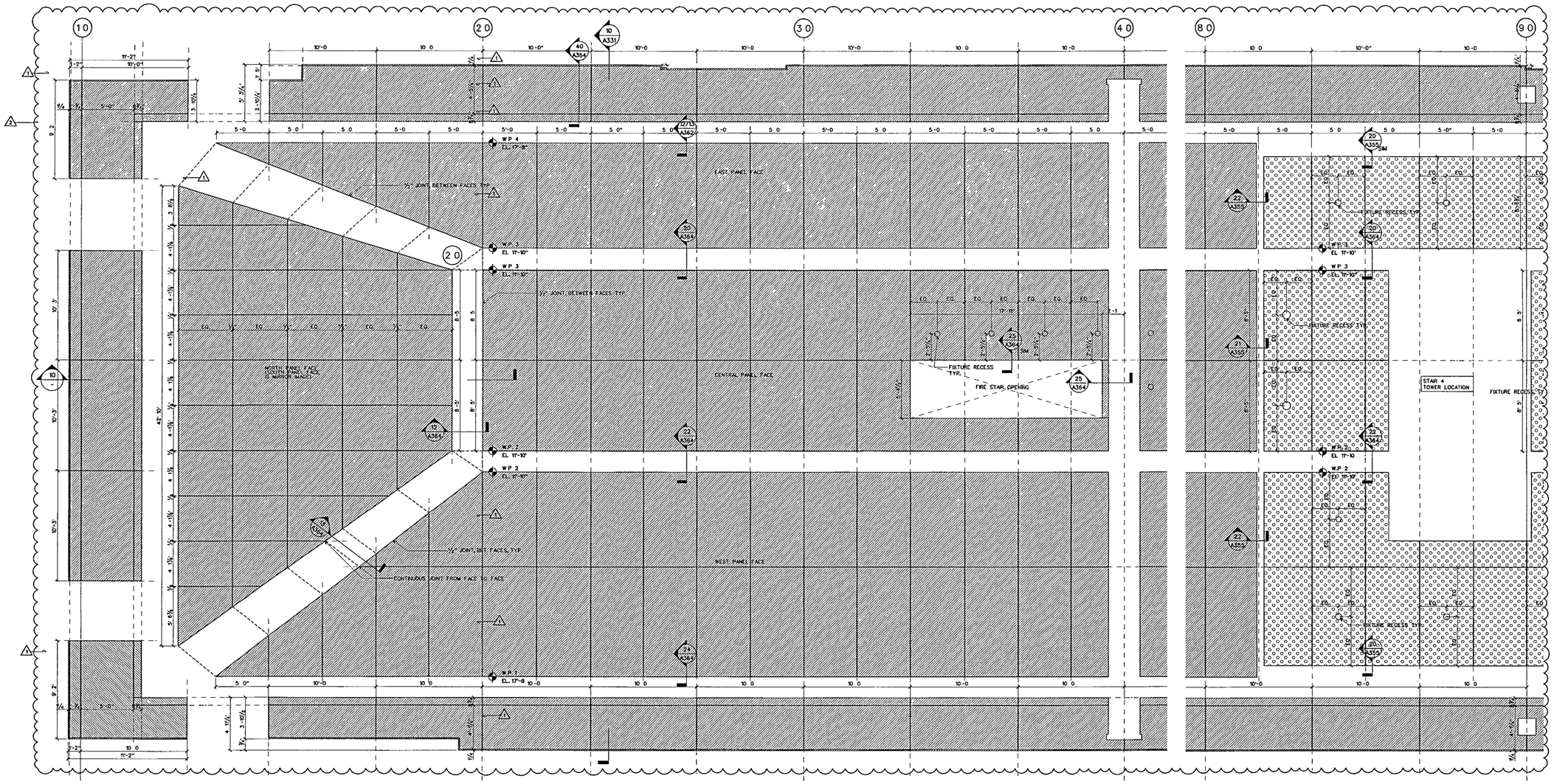

WALL SYSTEM C: DEVELOPED UNDERSIDE PLAN AT NORTH END OF BRIDGE

SCALE 1/4" = 1'-0"

DETAILS/DTL-CWC4 (21)

WALL SYSTEM C- DEVELOPED UNDERSIDE PLAN AT NORTH END OF LOBBY

SCALE 1/4" = 1-0"

RCP-DEVEL-01 (20)

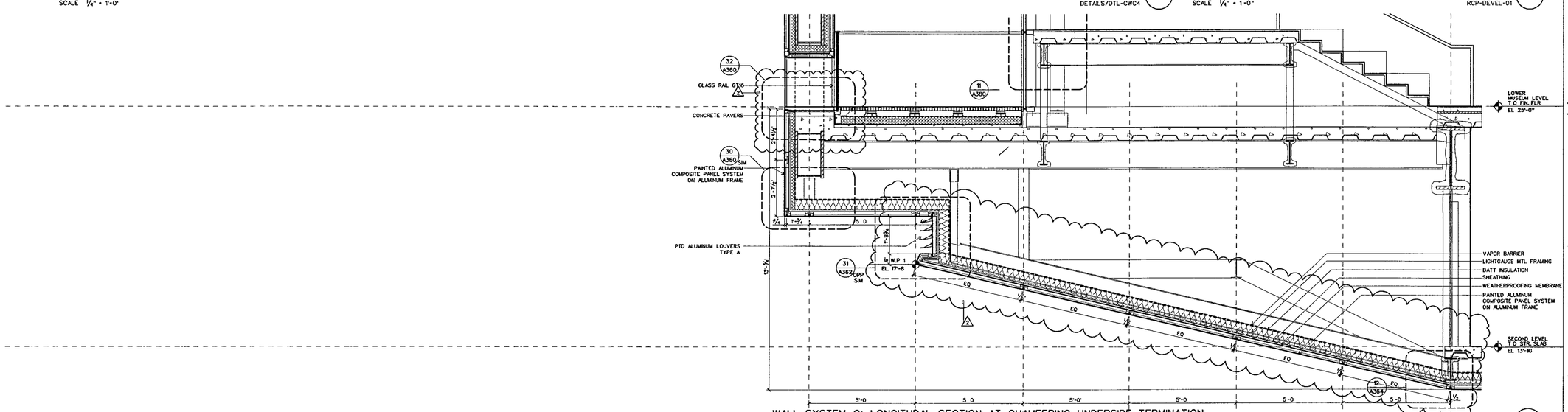

WALL SYSTEM C: LONGITUDAL SECTION AT CHAMFERING UNDERSIDE TERMINATION

SCALE 1/2 = 1-0

DETAILS/DTL-CWC5 (10)

WILLIAM J CLINTON PRESIDENTIAL CENTER

LITTLE ROCK, ARKANSAS

Architect

POLSHEK PARTNERSHIP LLP
320 West 13th Street
New York, New York 10014
212 807 7171

Coordinating Architects

POLK STANLEY YEARY ARCHITECTS Ltd
700 South Schiller Street
Little Rock Arkansas 72201
501 378 0878

WITSELL EVANS RASCO
901 West Third Street
Little Rock, Arkansas 72201
501 374 5300

WOODS CARADINE ARCHITECTS
2200 South Main Street
Little Rock Arkansas 72206
501 374 4060

Landscape Architects

HARGREAVES ASSOCIATES
118 Magazine Street
Cambridge Massachusettes 02139
617 661 0070

LANDSCAPE ARCHITECTURE, Inc.
2300 Cottondale Lane Suite 202
Little Rock Arkansas 72202
501 374 5610

Structural Engineer

LESLIE E ROBERTSON ASSOC RLLP
30 Broad Street, 47th Floor
New York New York 10004
212.750 9000

MEP Engineers

FLACK + KURTZ Inc.
475 Fifth Avenue
New York, New York 10017
212 532 9600

CROMWELL ARCHITECTS ENGINEERS
101 South Spring Street
Little Rock, Arkansas 72201
501 372 2900

Curtainwall Consultant

R. A. HEINTGES ARCHITECTS
126 Fifth Avenue, 9th Floor
New York, New York 10011
212.652-2968

Seal

RICHARD OLCZAK WITTOW ARCHITECT 3405 ARKANSAS

Issue	Date
100% Construction Documents	09/27/02
90% Progress Printing	08/30/02
100% Struct./ CD Progress*	07/01/02

*New sheet / formar A330 now A331

Job No 9908

Scale AS NOTED

Date September 27, 2002

Title WALL SYSTEM C SECTION AND DEVELOPED RCP

Sheet No A330

FOR OFFICIAL USE ONLY

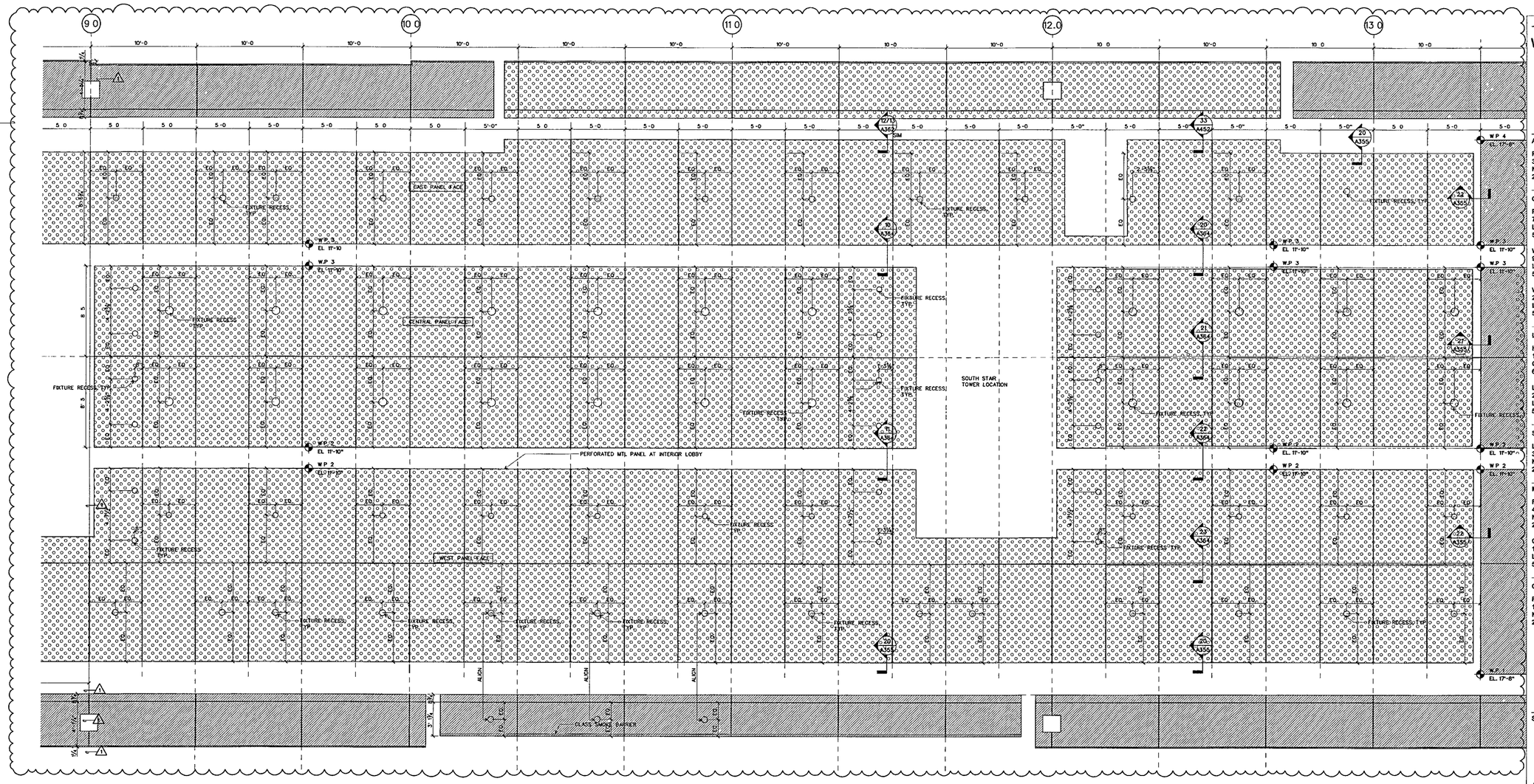

WALL SYSTEM C: DEVELOPED UNDERSIDE PLAN AT LOBBY

SCALE 1/4" = 1'-0"

RCP-DEVEL-01 20

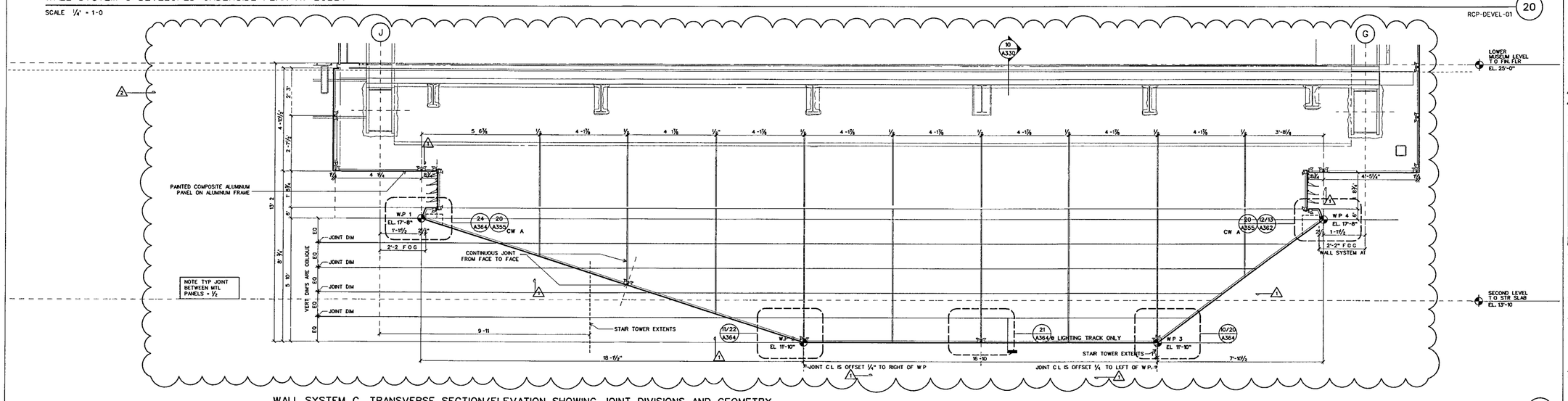

WALL SYSTEM C TRANSVERSE SECTION/ELEVATION SHOWING JOINT DIVISIONS AND GEOMETRY

SCALE 1/2" = 1'-0"

DETAILS/DTL-CWC6 10

WILLIAM J CLINTON PRESIDENTIAL CENTER

LITTLE ROCK, ARKANSAS

Architect

POLSHEK PARTNERSHIP LLP
320 West 13th Street
New York, New York 10014
212 807 7171

Coordinating Architects

POLK STANLEY YEARY ARCHITECTS Ltd
700 South Schiller Street
Little Rock, Arkansas 72201
501 378 0878

WITSELL EVANS RASCO
901 West Third Street
Little Rock, Arkansas 72201
501 374.5300

WOODS CARADINE ARCHITECTS
2200 South Main Street
Little Rock, Arkansas 72206
501 374 4060

Landscape Architects

HARGREAVES ASSOCIATES
118 Magazine Street
Cambridge Massachusettes 02139
617 661 0070

LANDSCAPE ARCHITECTURE, Inc.
2300 Cottondale Lane Suite 202
Little Rock, Arkansas 72202
501 374 5810

Structural Engineer

LESLIE E ROBERTSON ASSOC RLLP
30 Broad Street, 47th Floor
New York, New York 10004
212 750 9000

MEP Engineers

FLACK + KURTZ Inc.
475 Fifth Avenue
New York, New York 10017
212 532 9600

CROMWELL ARCHITECTS ENGINEERS
101 South Spring Street
Little Rock, Arkansas 72201
501 372 2900

Curtainwall Consultant

R A. HEINTGES ARCHITECTS
125 Fifth Avenue 9th Floor
New York. New York 10011
212 652-2966

Seal

Issue	Date
2 100% Construction Documents	09/27/02
1 90% Progress Printing	08/30/02
100% Struct/ CD Progress	07/01/02
100% Design Development*	03/01/02

*Originally Issued as A330

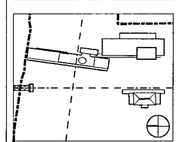

Job No 9908

Scale AS NOTED

Date September 27, 2002

Title WALL SYSTEM C SECTION AND DEVELOPED RCP

Sheet No A331

54

FOR OFFICIAL USE ONLY

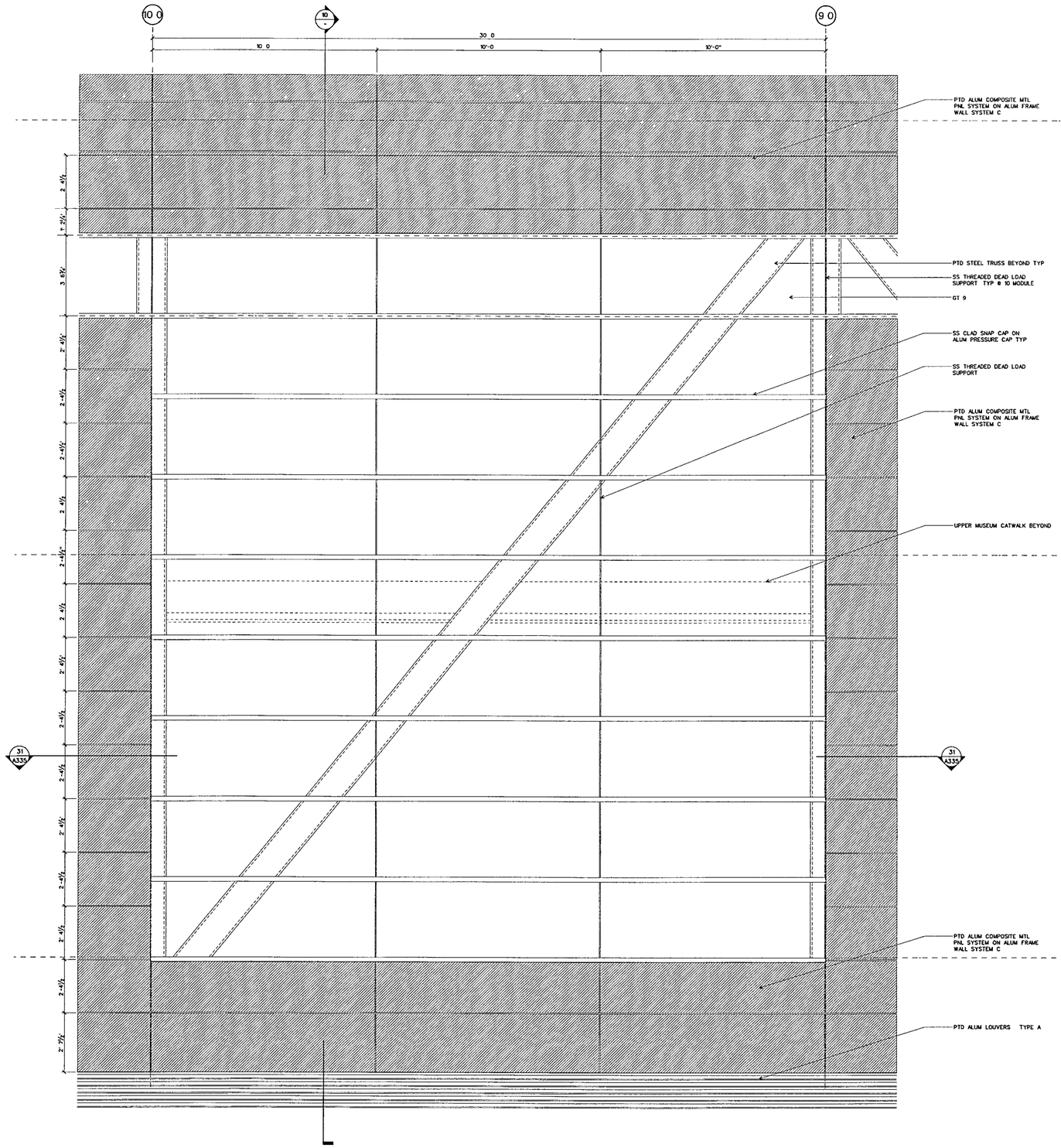

WALL SYSTEM D· ELEVATION AT EAST FACADE

SCALE ½" = 1'-0"

DETAILS/DTL-CWD-E 11

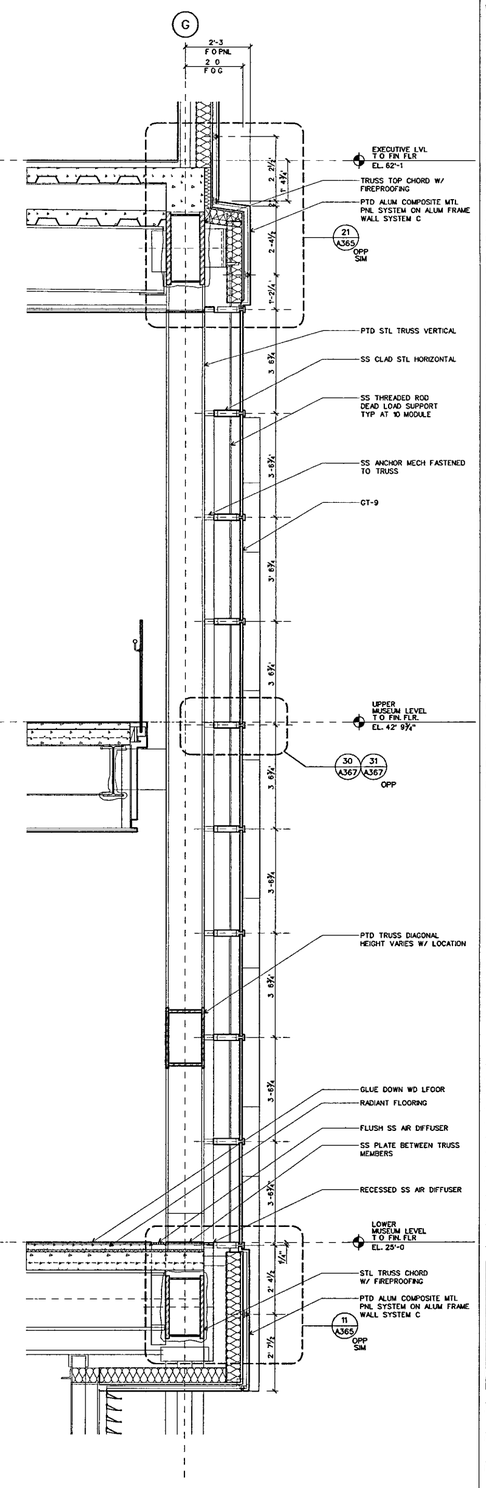

WALL SYSTEM D· WALL SECTION AT EAST FACADE

SCALE ½" = 1-0"

DETAILS/DTL-CWD-E 10

WILLIAM J CLINTON PRESIDENTIAL CENTER

LITTLE ROCK, ARKANSAS

Architect

POLSHEK PARTNERSHIP LLP
320 West 13th Street
New York, New York 10014
212 807 7171

Coordinating Architects

POLK STANLEY YEARY ARCHITECTS Ltd
700 South Schiller Street
Little Rock, Arkansas 72201
501 378 0878

WITSELL EVANS RASCO
901 West Third Street
Little Rock, Arkansas 72201
501 374 5300

WOODS CARADINE ARCHITECTS
2200 South Main Street
Little Rock, Arkansas 72206
501 374 4060

Landscape Architects

HARGREAVES ASSOCIATES
116 Magazine Street
Cambridge, Massachusettes 02139
617 661 0070

LANDSCAPE ARCHITECTURE, Inc.
2300 Cottondale Lane Suite 202
Little Rock, Arkansas 72202
501 374 5610

Structural Engineer

LESLIE E ROBERTSON ASSOC , RLLP
30 Broad Street, 47th Floor
New York, New York 10004
212 750 9000

MEP Engineers

FLACK + KURTZ Inc.
475 Fifth Avenue
New York New York 10017
212 532 9600

CROMWELL ARCHITECTS ENGINEERS
101 South Spring Street
Little Rock, Arkansas 72201
501 372.2900

Curtainwall Consultant

R A. HEINTGES ARCHITECTS
126 Fifth Avenue 9th Floor
New York, New York 10011
212.632-2955

Seal

Issue	Date
100% Construction Documents	09/27/02
90% Progress Printing	08/30/02
100% Struct./ CD Progress	07/01/02
100% Design Development	03/01/02

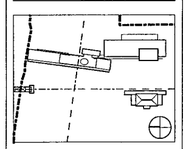

Job No 9908

Scale 1/2" = 1'-0"

Date September 27, 2002

Title WALL SYSTEM D ELEVATION AND SECTION

Sheet No A333

FOR OFFICIAL USE ONLY

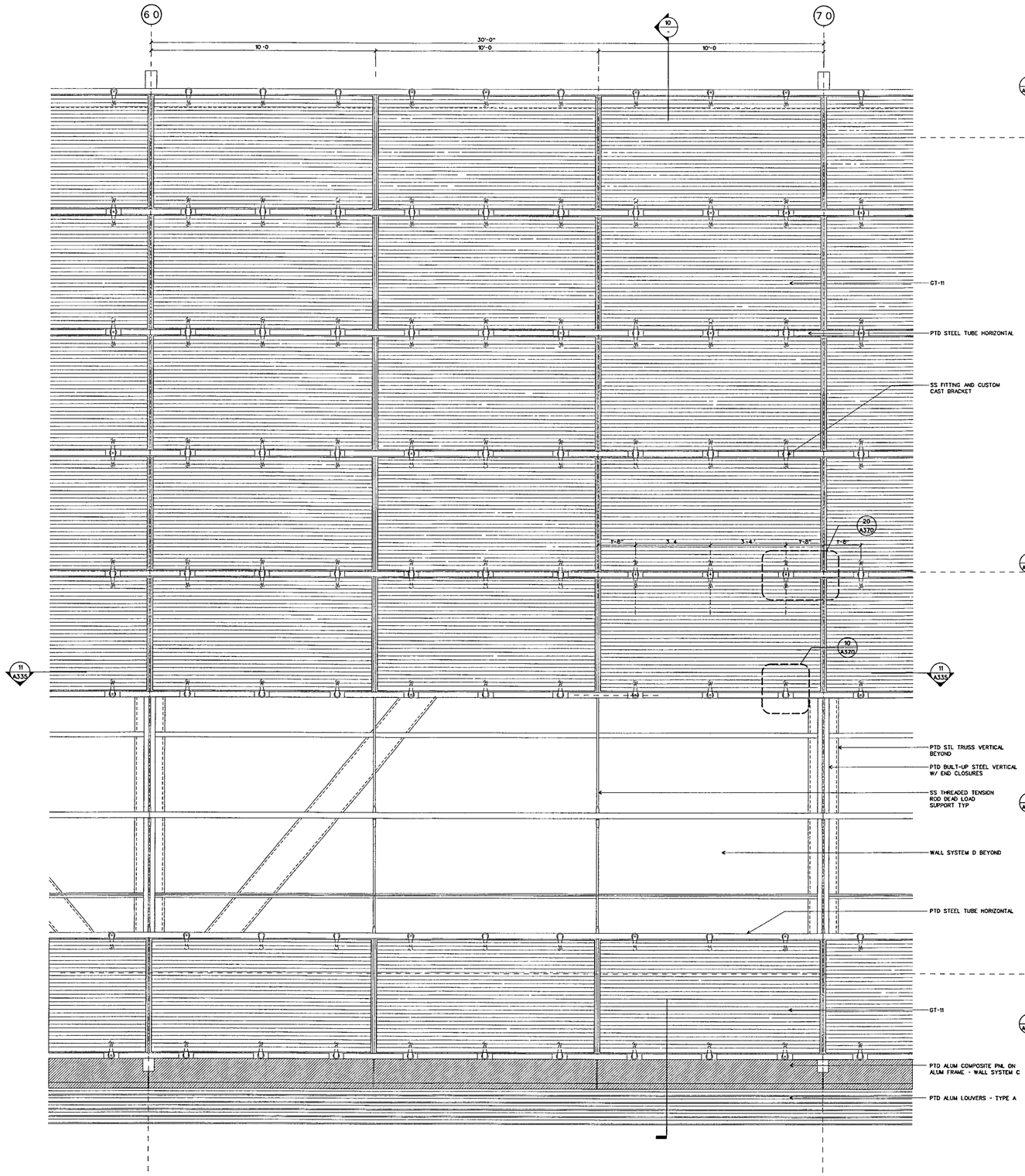

WALL SYSTEM E: ELEVATION AT TYPICAL BAY

SCALE: ½" = 1-0

DETAILS/DTL-CWD/E2 11

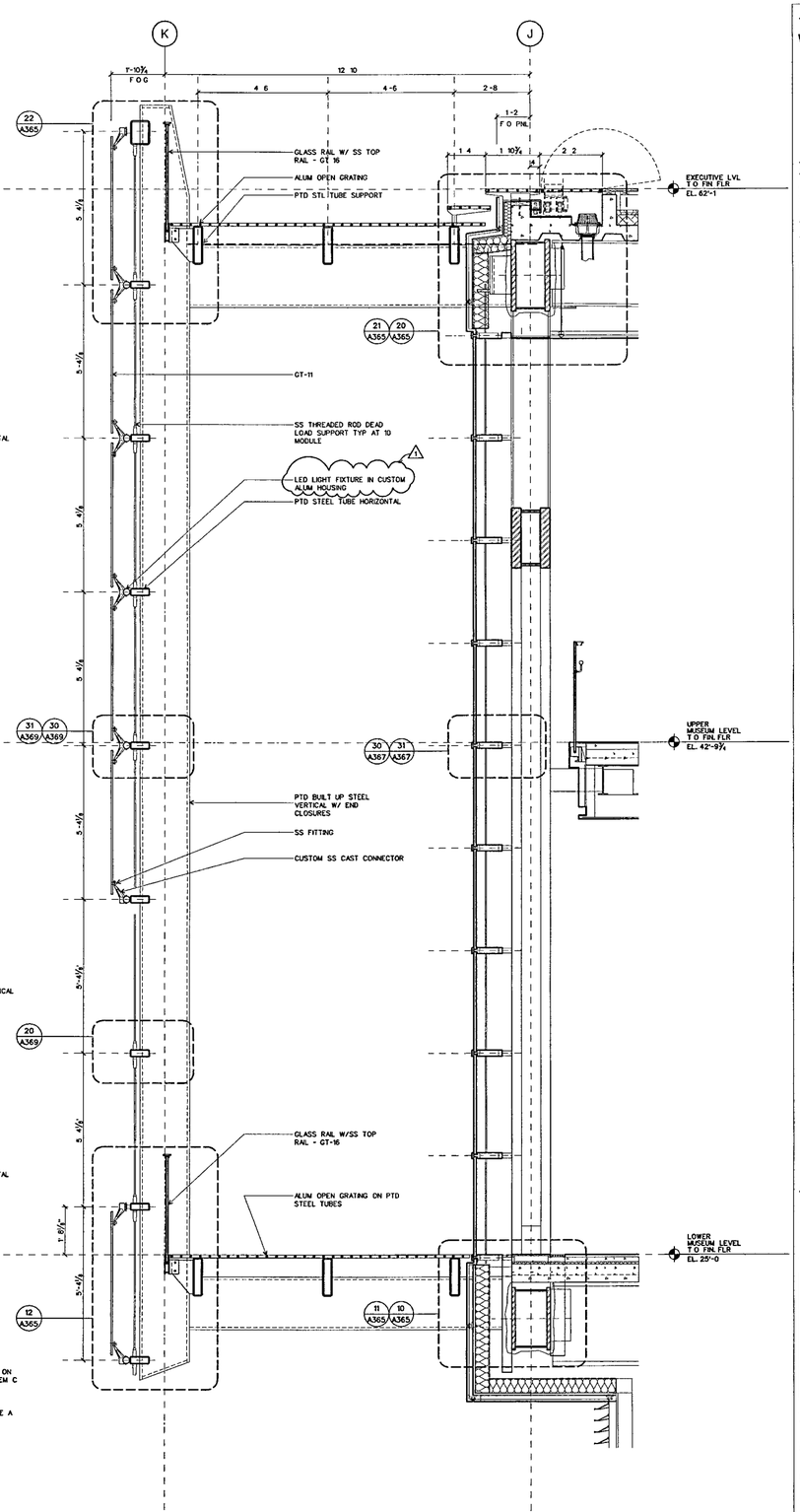

WALL SYSTEM D/E TYPICAL WALL SECTION

SCALE ½" = 1-0

DETAILS/DTL-CWD/E2 10

WILLIAM J CLINTON PRESIDENTIAL CENTER

LITTLE ROCK, ARKANSAS

Architect

POLSHEK PARTNERSHIP LLP
320 West 13th Street
New York, New York 10014
212 807 7171

Coordinating Architects

POLK STANLEY YEARY ARCHITECTS Ltd
700 South Schiller Street
Little Rock, Arkansas 72201
501 378 0878

WITSELL EVANS RASCO
901 West Third Street
Little Rock, Arkansas 72201
501 374 5300

WOODS CARADINE ARCHITECTS
2200 South Main Street
Little Rock, Arkansas 72206
501 374 4060

Landscape Architects

HARGREAVES ASSOCIATES
118 Magazine Street
Cambridge Massachusettes 02139
617 661 0070

LANDSCAPE ARCHITECTURE, Inc.
2300 Cottondale Lane Suite 202
Little Rock Arkansas 72202
501 374 5610

Structural Engineer

LESLIE E ROBERTSON ASSOC., RLLP
30 Broad Street, 47th Floor
New York New York 10004
212.750 9000

MEP Engineers

FLACK + KURTZ Inc.
475 Fifth Avenue
New York, New York 10017
212 532 9600

CROMWELL ARCHITECTS ENGINEERS
101 South Spring Street
Little Rock, Arkansas 72201
501 372.2900

Curtainwall Consultant

R. A. HEINTGES ARCHITECTS
120 Fifth Avenue, 9th Floor
New York, New York 10011
212.652-2966

Seal

Issue	Date
100% Construction Documents	09/27/02
90% Progress Printing	08/30/02
100% Struct./ CD Progress	07/01/02
100% Design Development	03/01/02

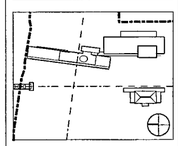

Job No 9908

Scale 1/2" = 1'-0"

Date September 27, 2002

Title

WALL SYSTEM D + E ELEVATION AND SECTION

Sheet No

A334

FOR OFFICIAL USE ONLY

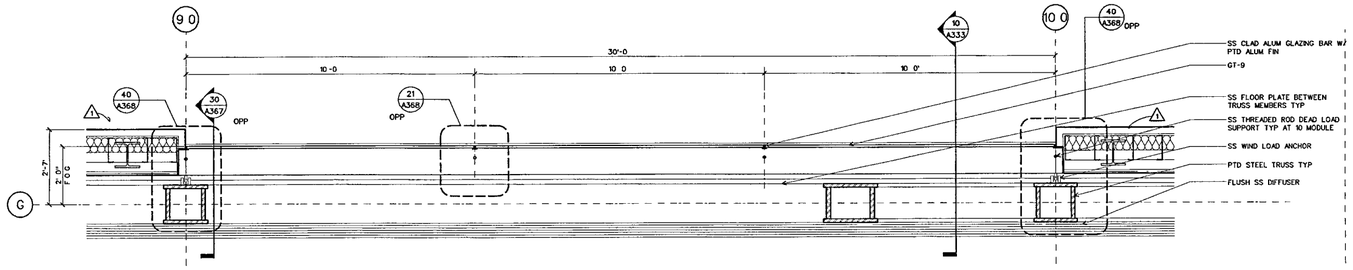

WALL SYSTEM D: PLAN SECTION AT EAST WALL

SCALE ½" = 1'-0"

DETAILS/DTL-CWD/E3 31

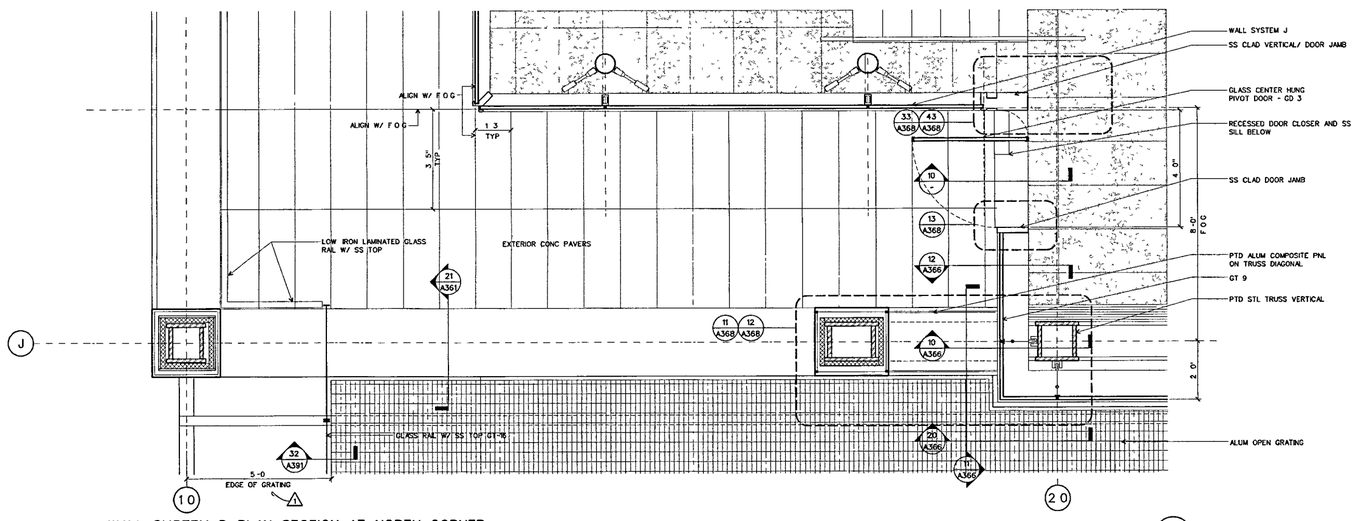

WALL SYSTEM D PLAN SECTION AT NORTH CORNER

SCALE ½" = 1'-0"

DETAILS/DTL-CWD/E3 21

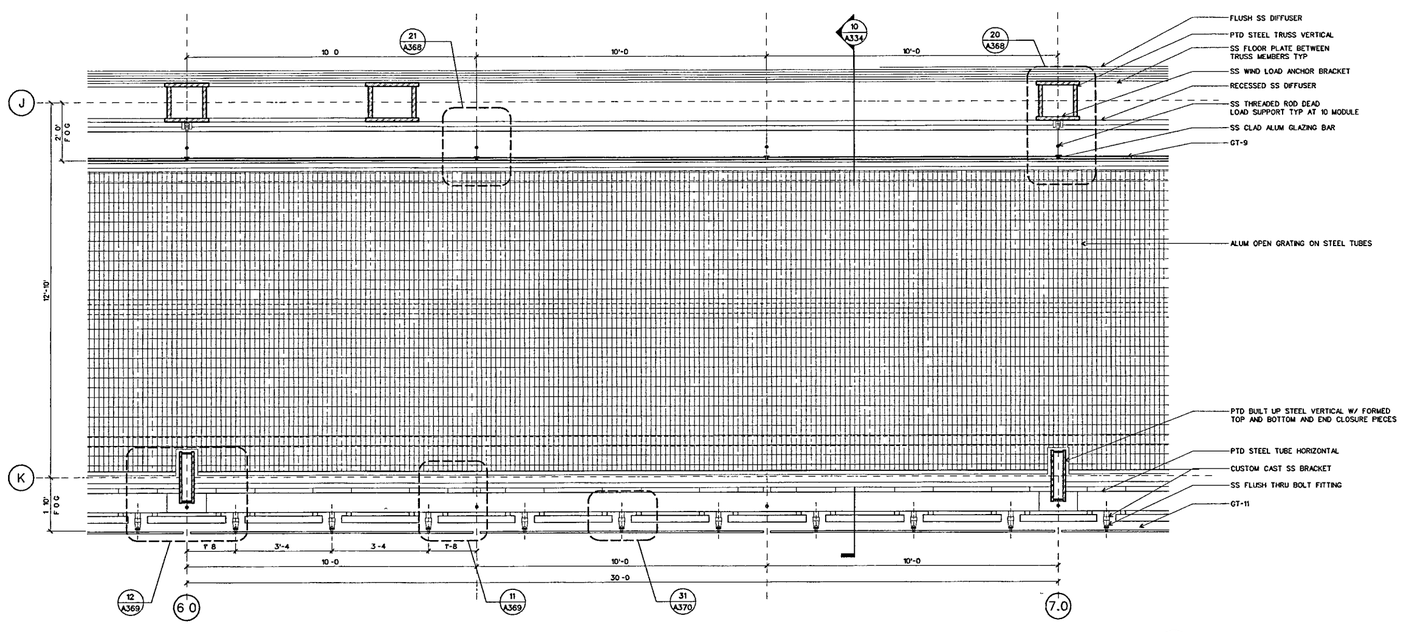

WALL SYSTEM D/E- PLAN SECTION TYPICAL BAY

SCALE ½" = 1'-0"

DETAILS/DTL-CWD/E3 11

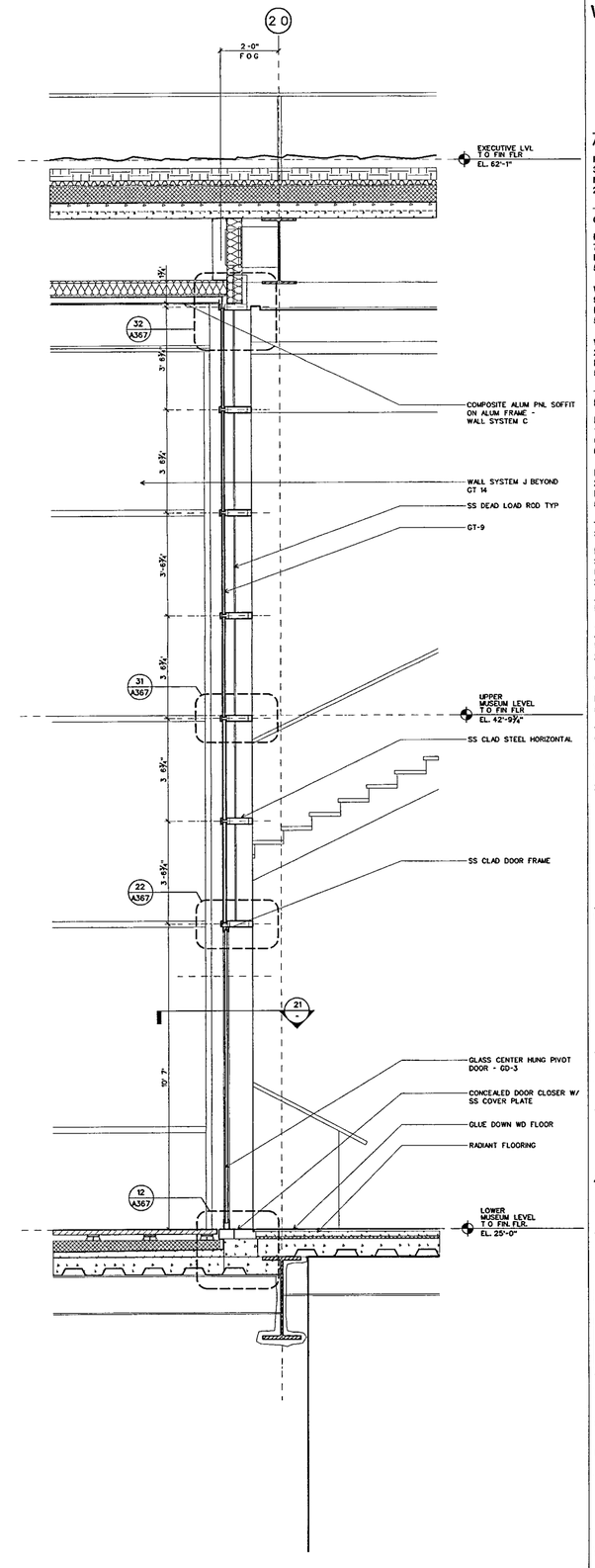

WALL SYSTEM D- WALL SECTION AT NORTH END

SCALE ½" = 1'-0"

DETAILS/DTL-CWD/E3 10

WILLIAM J CLINTON PRESIDENTIAL CENTER

LITTLE ROCK, ARKANSAS

Architect

POLSHEK PARTNERSHIP LLP
320 West 13th Street
New York New York 10014
212.807 7171

Coordinating Architects

POLK STANLEY YEARY ARCHITECTS Ltd
700 South Schiller Street
Little Rock, Arkansas 72201
501 378 0878

WITSELL EVANS RASCO
901 West Third Street
Little Rock Arkansas 72201
501 374 5300

WOODS CARADINE ARCHITECTS
2200 South Main Street
Little Rock, Arkansas 72206
501 374 4060

Landscape Architects

HARGREAVES ASSOCIATES
118 Magazine Street
Cambridge Massachusettes 02139
617 661 0070

LANDSCAPE ARCHITECTURE, Inc.
2300 Cottondale Lane Suite 202
Little Rock, Arkansas 72202
501 374 5610

Structural Engineer

LESLIE E. ROBERTSON ASSOC RLLP
30 Broad Street, 47th Floor
New York, New York 10004
212 750 9000

MEP Engineers

FLACK + KURTZ Inc.
475 Fifth Avenue
New York, New York 10017
212 532 9600

CROMWELL ARCHITECTS ENGINEERS
101 South Spring Street
Little Rock, Arkansas 72201
501 372 2900

Curtainwall Consultant

R A. HEINTGES ARCHITECTS
126 Fifth Avenue 9th Floor
New York, New York 10011
212 652-2966

Seal

RICHARD OLCOTT
REGISTERED ARCHITECT
3405
ARKANSAS

Issue	Date
100% Construction Documents	09/27/02
90% Progress Printing	08/30/02
100% Struct./ CD Progress	07/01/02
100% Design Development	03/01/02

Job No 9908

Scale 1/2" = 1'-0"

Date September 27, 2002

Title

WALL SYSTEM D + E PLANS AND SECTION

Sheet No

A335

FOR OFFICIAL USE ONLY

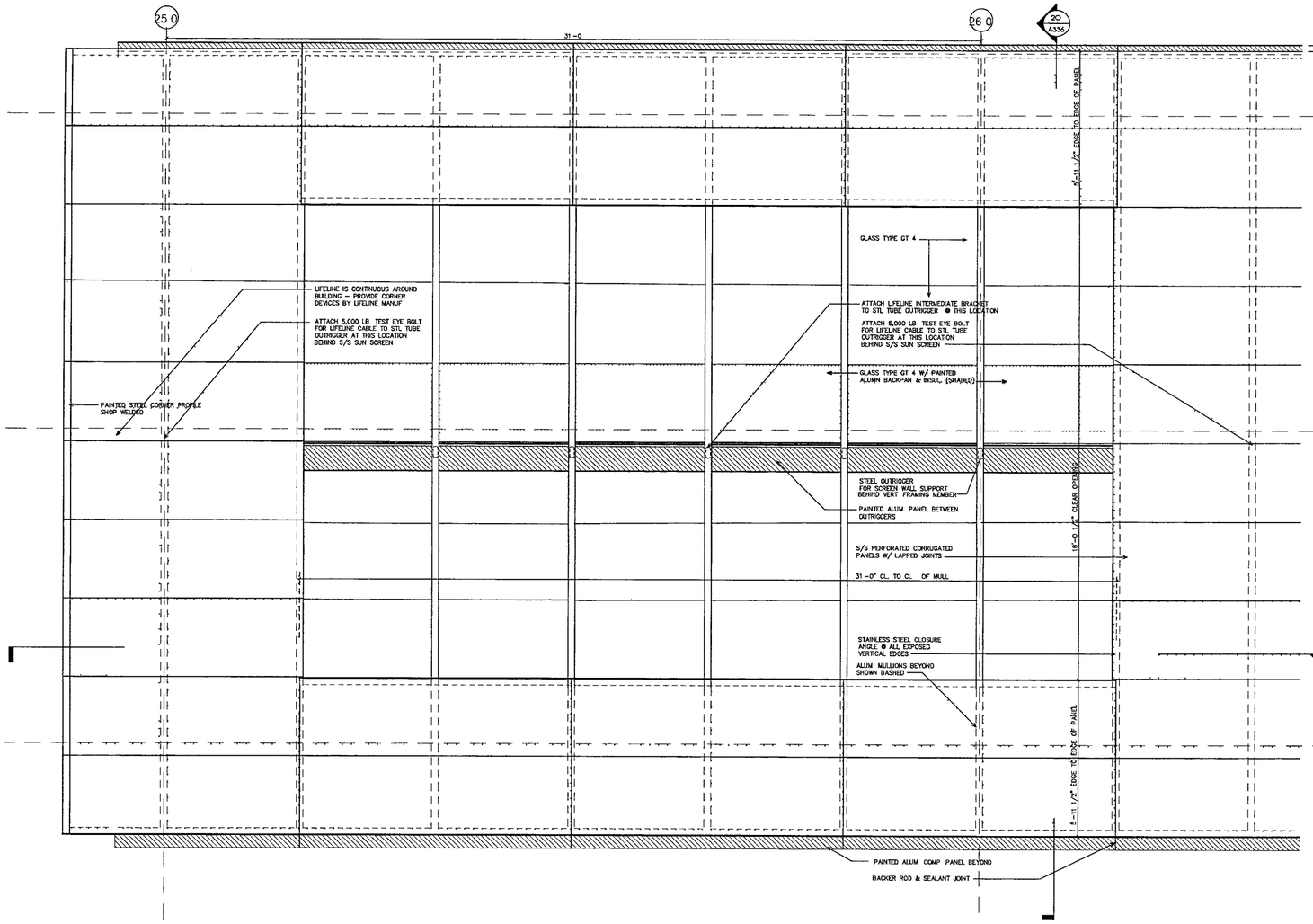

WALL SYSTEM F: PARTIAL ELEVATION AT OPENING IN SCREEN

SCALE. 1/2 " = 1'-0"

21

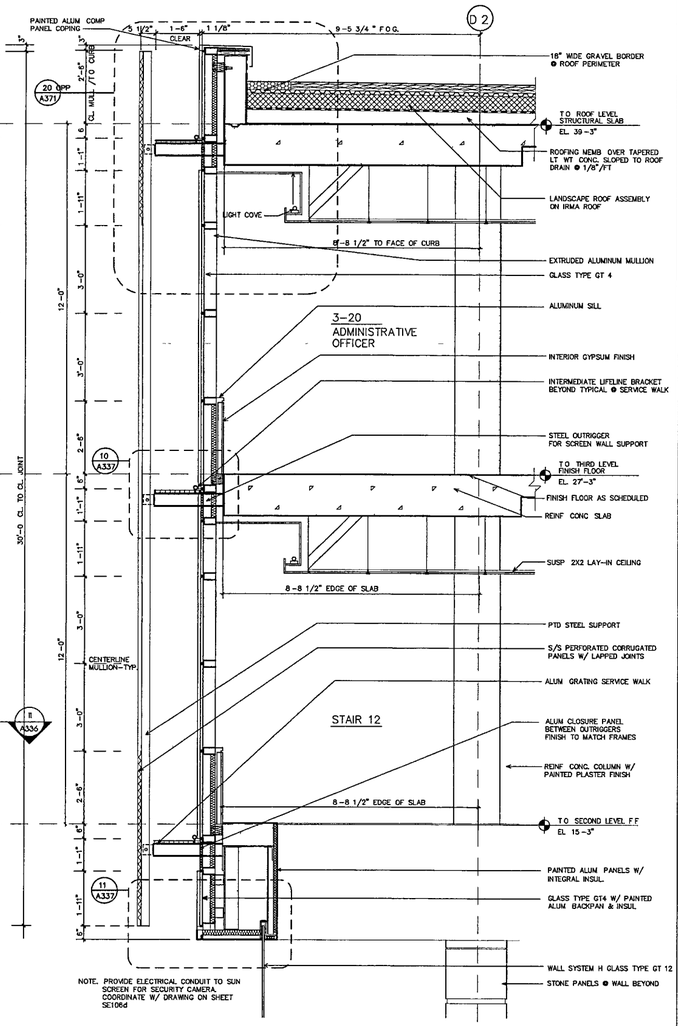

WALL SYSTEM F. WALL SECTION

SCALE. 1/2 " = 1'-0"

20

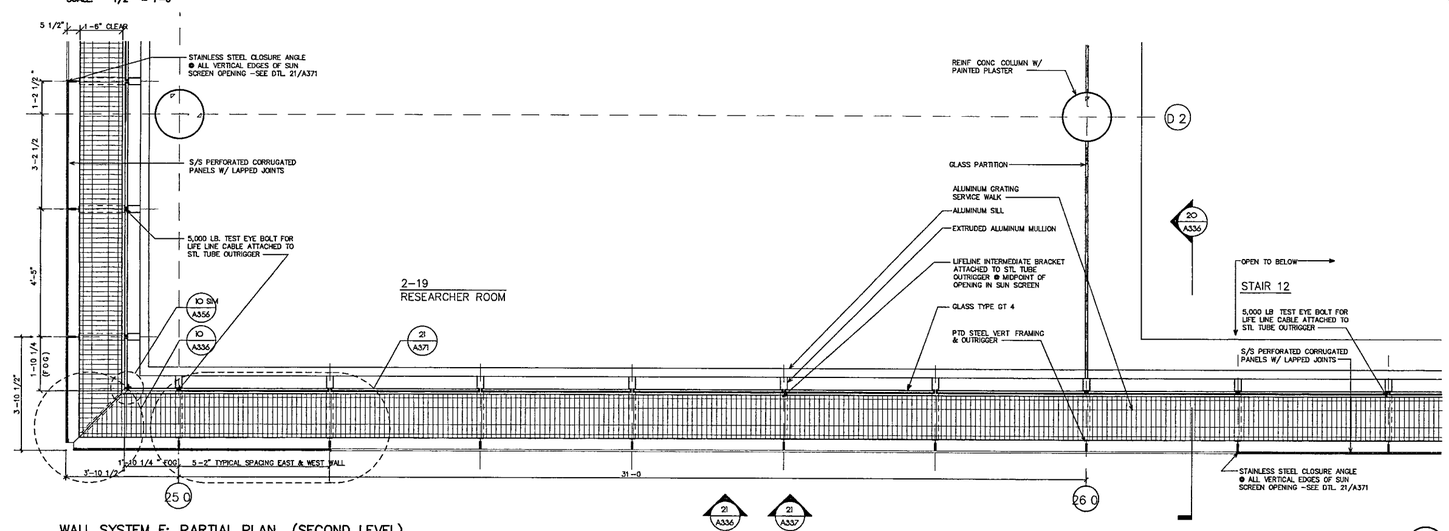

WALL SYSTEM F: PARTIAL PLAN (SECOND LEVEL)

SCALE. 1/2 " = 1'-0"

11

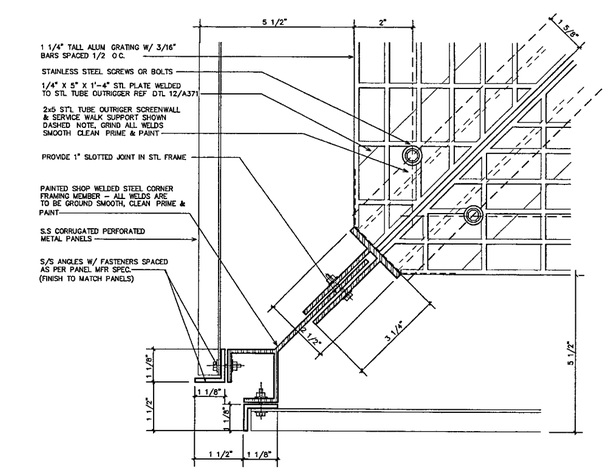

WALL SYSTEM F: CORNER DETAIL

SCALE. 6" = 1'-0"

10

WILLIAM J. CLINTON PRESIDENTIAL CENTER

LITTLE ROCK, ARKANSAS

Architect

POLSHEK PARTNERSHIP LLP
320 West 13th Street
New York, New York 10014
212.807 7171

Coordinating Architects

POLK STANLEY YEARY ARCHITECTS Ltd
700 South Schiller Street
Little Rock, Arkansas 72201
501.378 0878

WITSELL EVANS & RASCO
901 West Third Street
Little Rock, Arkansas 72201
501.374.5300

WOODS CARADINE ARCHITECTS
2200 South Main Street
Little Rock, Arkansas 72206
501.374.4060

Landscape Architects

HARGREAVES ASSOCIATES
118 Magazine Street
Cambridge, Massachusettes 02139
617 661 0070

LANDSCAPE ARCHITECTURE, Inc.
2300 Cottondale Lane Suite 202
Little Rock, Arkansas 72202
501.374.5610

Structural Engineer

LESLIE E. ROBERTSON ASSOC., RLLP
30 Broad Street, 47th Floor
New York, New York 10017
212.750 9000

MEP Engineers

FLACK + KURTZ Inc.
475 Fifth Avenue
New York, New York 10017
212.532.9600

CROMWELL ARCHITECTS ENGINEERS
101 South Spring Street
Little Rock, Arkansas 72201
501.372.2900

Curtainwall Consultant

R.A. HEINTGES ARCHITECTS
126 Fifth Avenue, 9th Floor
New York, New York 10011
212 652-2966

Seal

Issue	Date
100% Construction Documents	09/27/02
90% Progress Printing	08/30/02
100% Struct./CD Progress	07/01/02
100% Steel & Concrete CD	
& Architectural CD Progress	05/15/02
100% Design Development	03/01/02

Job No PPA. 9908 PSY 426D

Scale AS SHOWN

Date September 27, 2002

Title WALL SYSTEM F. PLAN, ELEVATION AND SECTION

Sheet No. A336

FOR OFFICIAL USE ONLY

THURSDAY SEPTEMBER 26 2002 12 22 PM

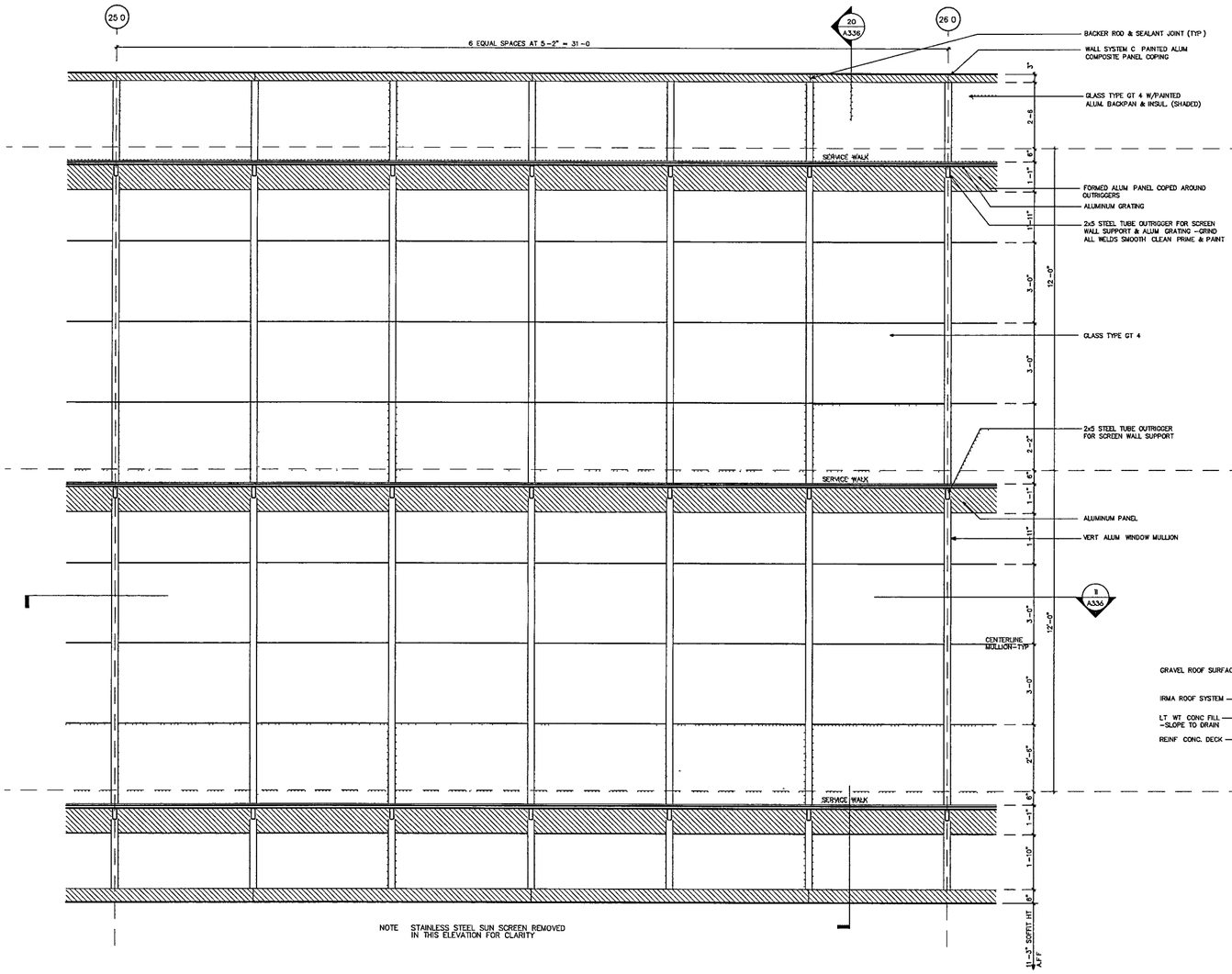

WALL SYSTEM F PARTIAL WEST ELEVATION AT GLASS (21)

SCALE. 1/2 " = 1'-0"

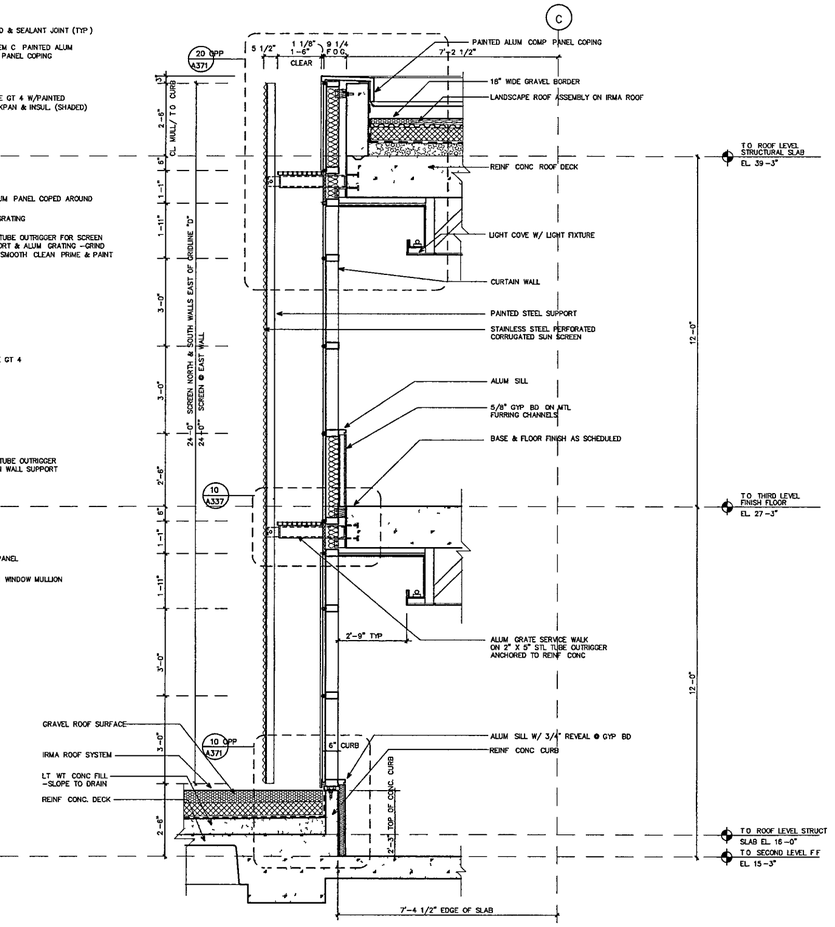

WALL SYSTEM F. WALL SECTION AT EAST ELEVATION (20)

SCALE. 1/2 " = 1'-0"

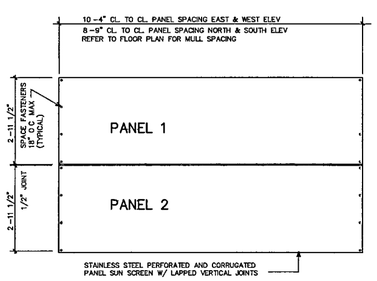

WALL SYSTEM F: FASTENER ATTACHMENT LOCATIONS (12)

SCALE. 1/2" = 1'-0"

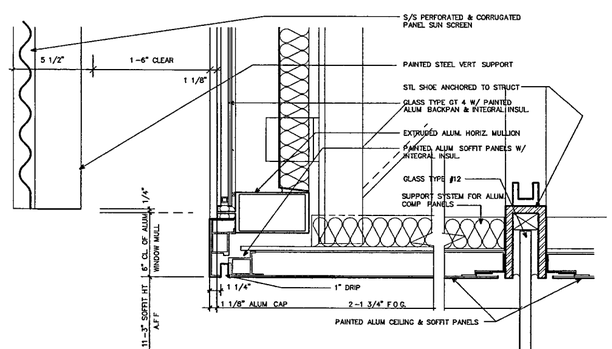

WALL SYSTEM F: CORNER DETAIL AT ENTRANCE (11)

SCALE. 3 " = 1'-0"

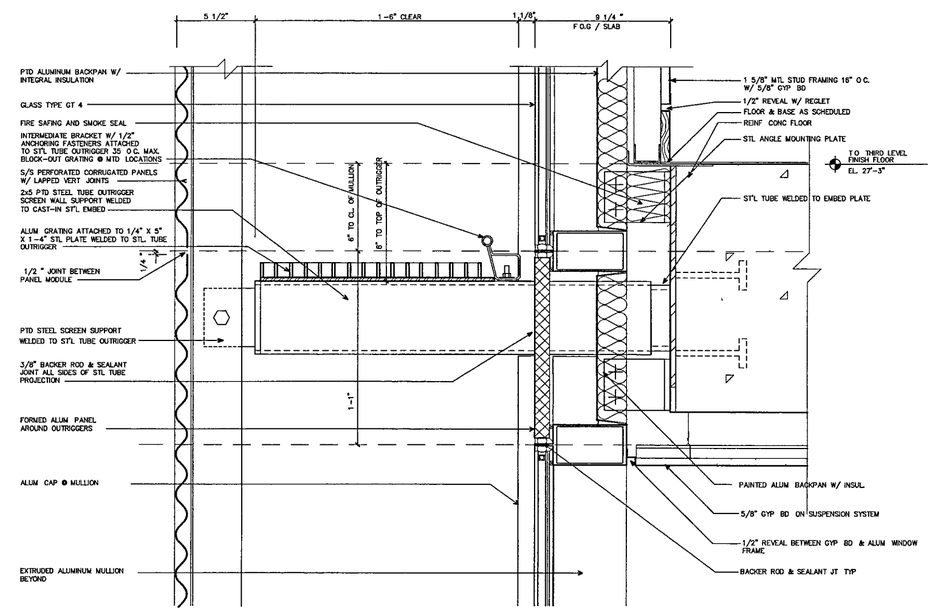

WALL SYSTEM F. SECTION DETAIL AT OUTRIGGER (10)

SCALE. 3 " = 1'-0"

WILLIAM J. CLINTON PRESIDENTIAL CENTER

LITTLE ROCK, ARKANSAS

Architect

POLSHEK PARTNERSHIP LLP
320 West 13th Street
New York, New York 10014
212.807 7171

Coordinating Architects

POLK STANLEY YEARY ARCHITECTS Ltd
700 South Schiller Street
Little Rock, Arkansas 72201
501.378.0678

WITSELL EVANS & RASCO
901 West Third Street
Little Rock, Arkansas 72201
501.374.5300

WOODS CARADINE ARCHITECTS
2200 South Main Street
Little Rock, Arkansas 72206
501.374.4060

Landscape Architects

HARGREAVES ASSOCIATES
118 Magazine Street
Cambridge, Massachusettes 02139
617 661 0070

LANDSCAPE ARCHITECTURE, Inc.
2300 Cottondale Lane Suite 202
Little Rock, Arkansas 72202
501.374.5610

Structural Engineer

LESLIE E. ROBERTSON ASSOC., RLLP
30 Broad Street, 47th Floor
New York, New York 10017
212.750.9000

MEP Engineers

FLACK + KURTZ Inc.
475 Fifth Avenue
New York, New York 10017
212.532.9600

CROMWELL ARCHITECTS ENGINEERS
101 South Spring Street
Little Rock, Arkansas 72201
501.372.2900

Curtainwall Consultant

R.A. HEINTGES ARCHITECTS
126 Fifth Avenue, 8th. Floor
New York, New York 10011
212.652-2966

Seal

POLK STANLEY YEARY ARCHITECTS REGISTRATION C-136 ARKANSAS

Issue	Date
100% Construction Documents	09/27/02
90% Progress Printing	08/30/02
100% Struct./CD Progress	07/01/02
100% Steel & Concrete CD	
& Architectural CD Progress	05/15/02
100% Design Development	03/01/02

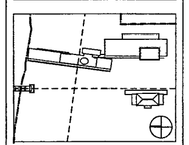

Job No PPA. 9908 PSY 426D

Scale AS NOTED

Date September 27, 2002

Title

WALL SYSTEM F- ELEVATION & DETAIL

Sheet No

A337

FOR OFFICIAL USE ONLY

THURSDAY SEPTEMBER 26 2002 11 04 AM

59

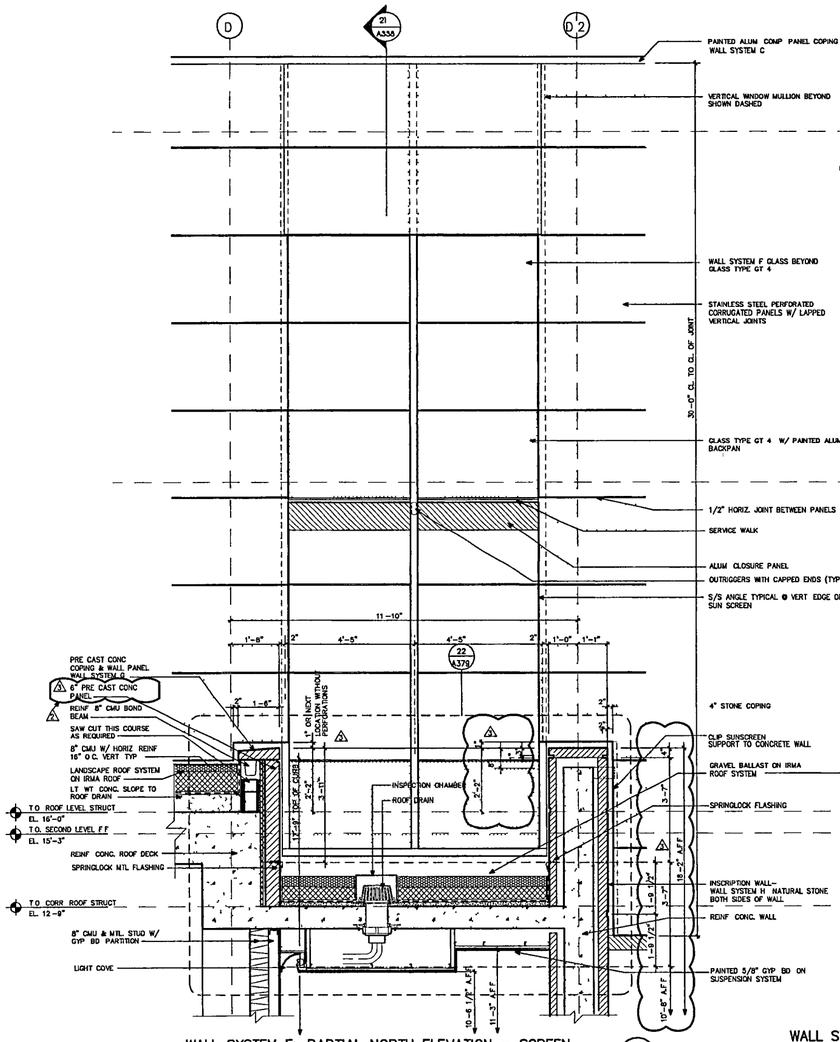

WALL SYSTEM F· PARTIAL NORTH ELEVATION – SCREEN (22)

SCALE. 1/2" = 1'-0"

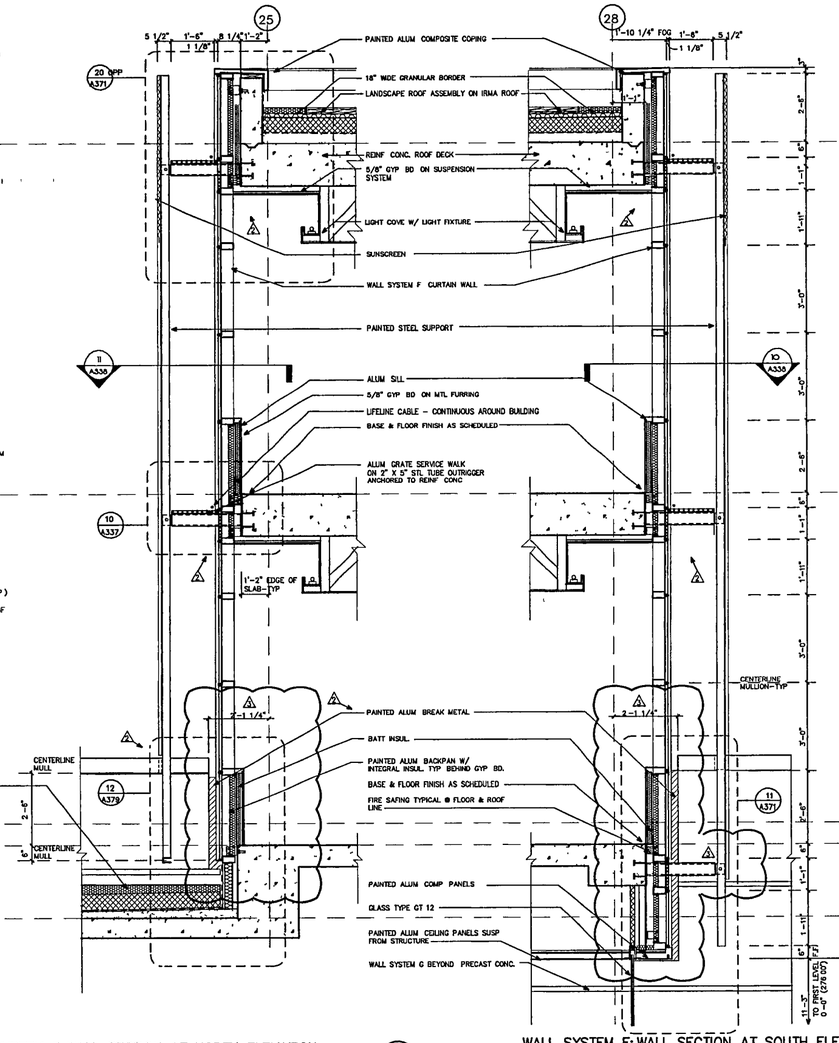

WALL SYSTEM F: WALL SECTION AT NORTH ELEVATION (21)

SCALE 1/2" = 1'-0"

WALL SYSTEM F: WALL SECTION AT SOUTH ELEVATION (20)

SCALE. 1/2" = 1'-0"

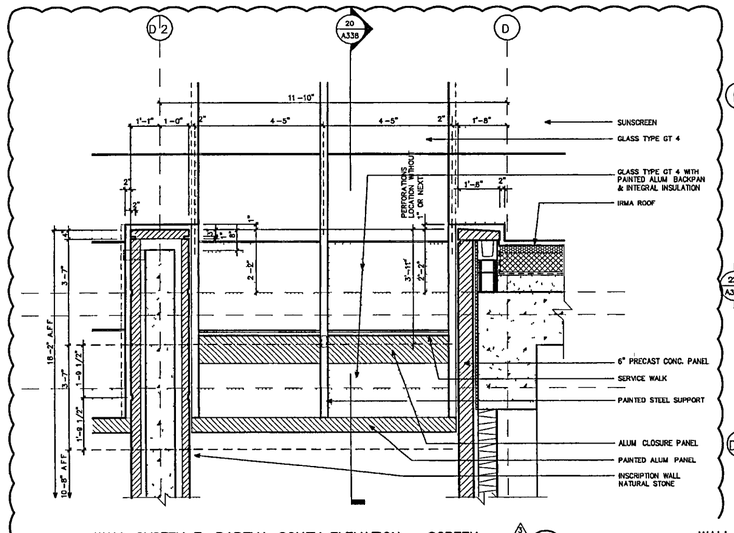

WALL SYSTEM F: PARTIAL SOUTH ELEVATION – SCREEN (12)

SCALE. 1/2" = 1'-0"

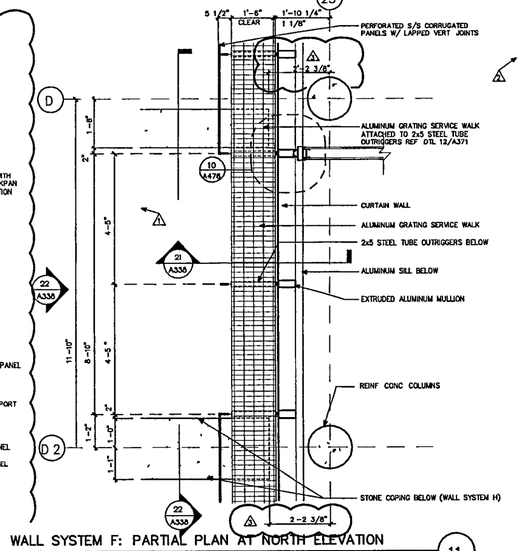

WALL SYSTEM F: PARTIAL PLAN AT NORTH ELEVATION (11)

SCALE: 1/2" = 1'-0"

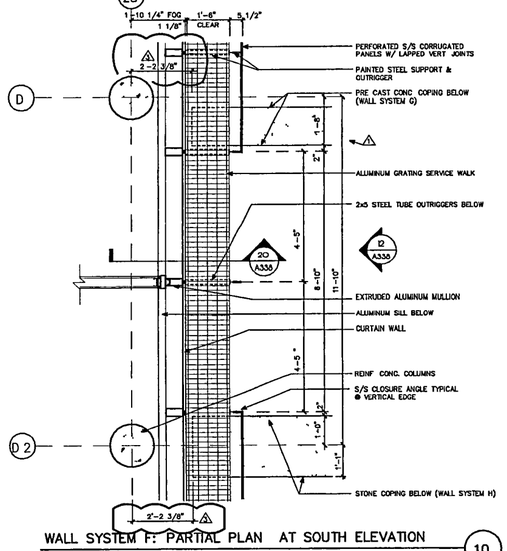

WALL SYSTEM F: PARTIAL PLAN AT SOUTH ELEVATION (10)

SCALE. 1/2" = 1'-0"

WILLIAM J. CLINTON PRESIDENTIAL CENTER

LITTLE ROCK, ARKANSAS

Architect

POLSHEK PARTNERSHIP LLP
320 West 13th Street
New York, New York 10014
212.807 7171

Coordinating Architects

POLK STANLEY YEARY ARCHITECTS Ltd
700 South Schiller Street
Little Rock, Arkansas 72201
501.378 0878

WITSELL EVANS & RASCO
901 West Third Street
Little Rock, Arkansas 72201
501.374.5300

WOODS CARADINE ARCHITECTS
2200 South Main Street
Little Rock, Arkansas 72206
501.374.4060

Landscape Architects

HARGREAVES ASSOCIATES
118 Magazine Street
Cambridge, Massachusettes 02139
617.861.0070

LANDSCAPE ARCHITECTURE, Inc.
2300 Cottondale Lane Suite 202
Little Rock, Arkansas 72202
501.374.5610

Structural Engineer

LESLIE E. ROBERTSON ASSOC., RLLP
30 Broad Street, 47th Floor
New York, New York 10017
212.750 9000

MEP Engineers

FLACK + KURTZ Inc.
475 Fifth Avenue
New York, New York 10017
212.532.9600

CROMWELL ARCHITECTS ENGINEERS
101 South Spring Street
Little Rock, Arkansas 72201
501.372.2900

Curtainwall Consultant

R.A. HEINTGES ARCHITECTS
126 Fifth Avenue, 9th Floor
New York, New York 10011
212.652-2966

Seal

POLK STANLEY YEARY ARCHITECTS REGISTRATION C-136 ARKANSAS

Issue	Date
4 Addendum #4	11/22/02
3 Addendum #2	11/15/02
2 Addendum #1	10/23/02
100% Construction Documents	09/27/02
90% Progress Printing	08/30/02
100% Bnd.CD Progress	07/01/02
100% Steel & Concrete CD	
5 Architectural CD Progress	05/15/02
100% Design Development	03/01/02

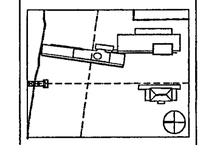

Job No. PPA. 9908 PSY· 425D

Scale 1/2" = 1'-0"

Date September 27, 2002

Title **WALL SYSTEM F: PLANS, ELEVATION AND SECTIONS**

Sheet No **A338**

FOR OFFICIAL USE ONLY

MONDAY, DECEMBER 02, 2002 9 51 AM

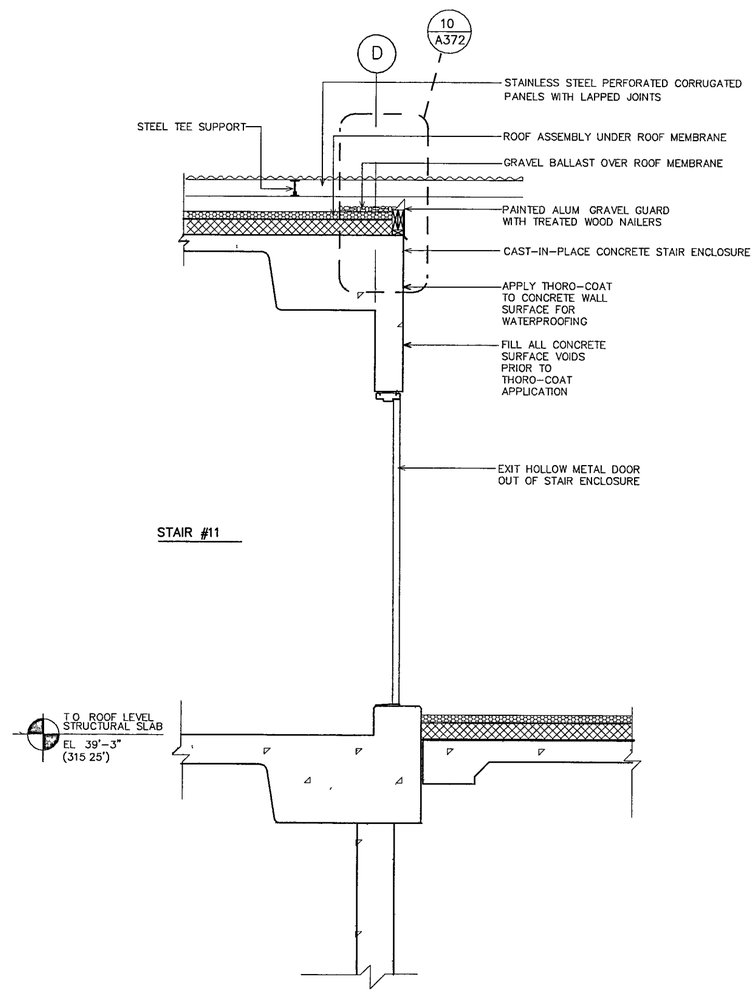

ARCHIVE-BUILDING: WALL SECTION THRU DOOR – STAIR #11 PENTHOUSE (11)

SCALE. 3/4 " = 1'-0"

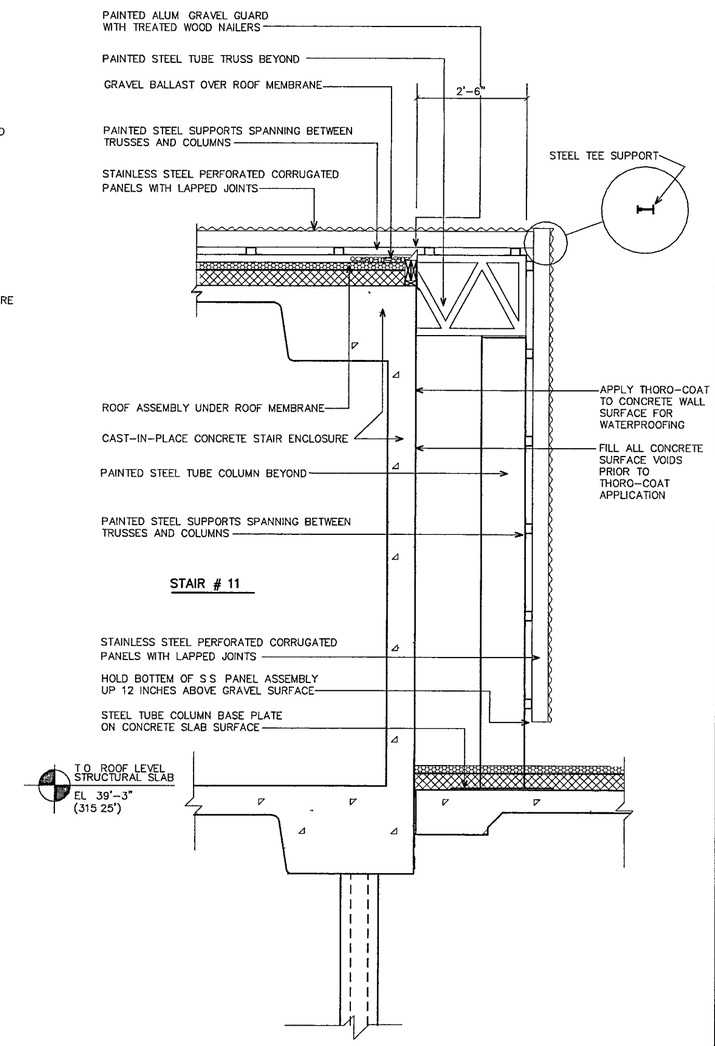

ARCHIVE-BUILDING: WALL SECTION – STAIR #11 PENTHOUSE (10)

SCALE 3/4 " = 1-0"

WILLIAM J. CLINTON PRESIDENTIAL CENTER

LITTLE ROCK, ARKANSAS

Architect

POLSHEK PARTNERSHIP LLP
320 West 13th Street
New York, New York 10014
212.807 7171

Coordinating Architects

POLK STANLEY YEARY ARCHITECTS Ltd
700 South Schiller Street
Little Rock, Arkansas 72201
501.378 0878

WITSELL EVANS & RASCO
901 West Third Street
Little Rock, Arkansas 72201
501.374.5300

WOODS CARADINE ARCHITECTS
2200 South Main Street
Little Rock, Arkansas 72206
501.374 4060

Landscape Architects

HARGREAVES ASSOCIATES
118 Magazine Street
Cambridge, Massachusettes 02139
617.661 0070

LANDSCAPE ARCHITECTURE, Inc.
2300 Cottondale Lane Suite 202
Little Rock, Arkansas 72202
501.374.5610

Structural Engineer

LESLIE E. ROBERTSON ASSOC., RLLP
30 Broad Street, 47th Floor
New York, New York 10017
212.750 9000

MEP Engineers

FLACK + KURTZ Inc.
475 Fifth Avenue
New York, New York 10017
212.532.9600

CROMWELL ARCHITECTS ENGINEERS
101 South Spring Street
Little Rock, Arkansas 72201
501.372.2900

Curtainwall Consultant

R.A. HEINTGES ARCHITECTS
126 Fifth Avenue, 9th Floor
New York, New York 10011
212.652-2966

Seal

POLK STANLEY YEARY ARCHITECTS
REGISTERED
C-136
ARKANSAS

Issue	Date
100% Construction Documents	09/27/02

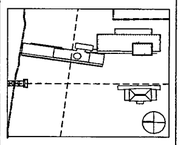

Job No PPA 9908
PSY 426D

Scale 3/4" = 1'-0"

Date September 27, 2002

Title
ARCHIVE BUILDING
STAIR 11
WALL SECTIONS

Sheet No
A339

FOR OFFICIAL USE ONLY

THURSDAY, SEPTEMBER 26, 2002 11 23 AM

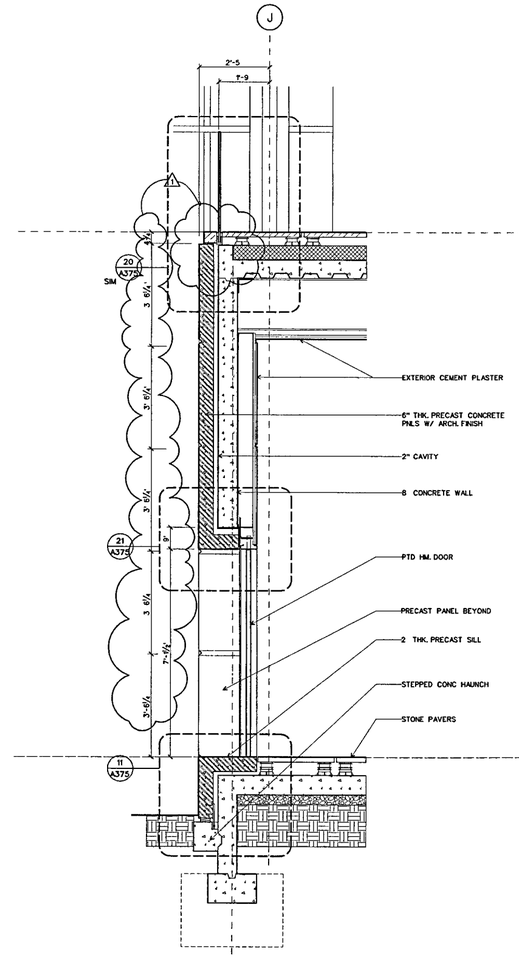

WALL SYSTEM G: SECTION AT CAFE

SCALE 1/2" = 1-0 DTL-CWG1 21

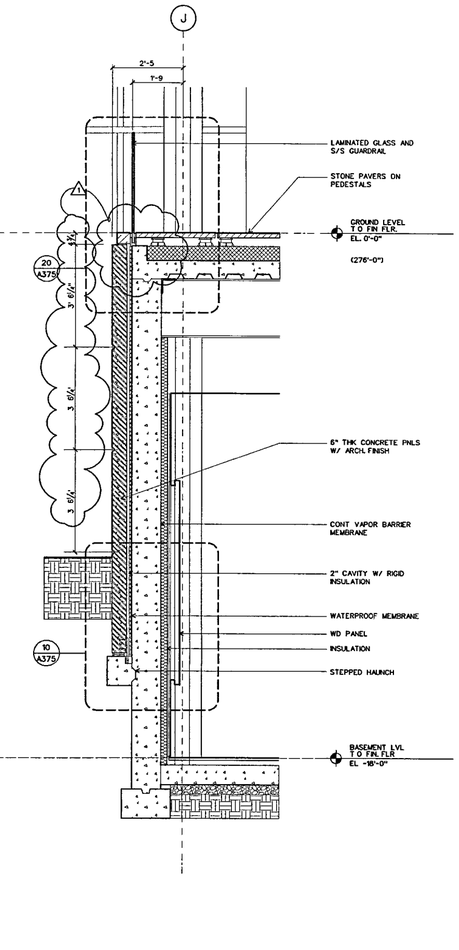

WALL SYSTEM G: SECTION AT CAFE

SCALE 1/2" = 1-0 DTL-CWG1 20

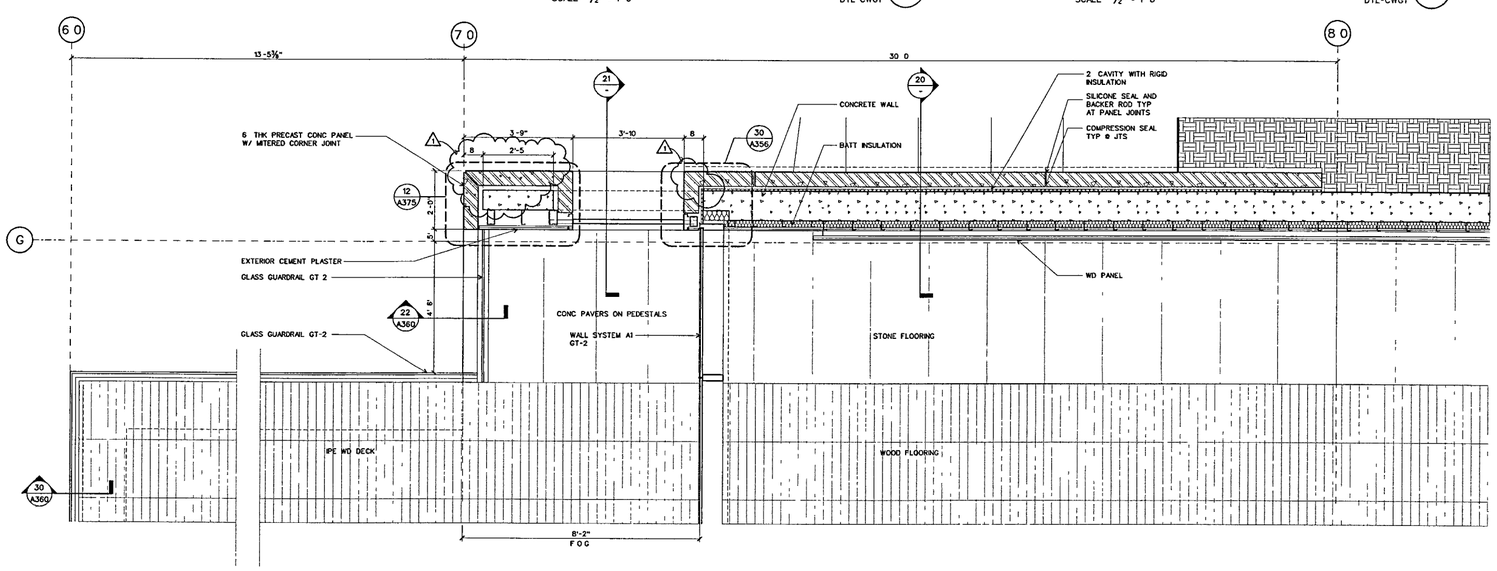

WALL SYSTEM G: PLAN AT CAFE WEST WALL

SCALE 1/2" = 1-0 DETAILS/DTL-CWG1 10

WILLIAM J CLINTON PRESIDENTIAL CENTER

LITTLE ROCK, ARKANSAS

Architect

POLSHEK PARTNERSHIP LLP
320 West 13th Street
New York, New York 10014
212.807 7171

Coordinating Architects

POLK STANLEY YEARY ARCHITECTS Ltd
700 South Schiller Street
Little Rock, Arkansas 72201
501 378.0878

WITSELL EVANS RASCO
901 West Third Street
Little Rock, Arkansas 72201
501 374 5300

WOODS CARADINE ARCHITECTS
2200 South Main Street
Little Rock, Arkansas 72206
501 374 4060

Landscape Architects

HARGREAVES ASSOCIATES
118 Magazine Street
Cambridge Massachusettes 02139
617 661 0070

LANDSCAPE ARCHITECTURE, Inc.
2300 Cottondale Lane Suite 202
Little Rock, Arkansas 72202
501 374 5610

Structural Engineer

LESLIE E ROBERTSON ASSOC , RLLP
30 Broad Street, 47th Floor
New York, New York 10004
212.750 9000

MEP Engineers

FLACK + KURTZ Inc
475 Fifth Avenue
New York, New York 10017
212 532 9600

CROMWELL ARCHITECTS ENGINEERS
101 South Spring Street
Little Rock, Arkansas 72201
501 372.2900

Curtainwall Consultant

R. A. HEINTGES ARCHITECTS
128 Fifth Avenue, 9th Floor
New York, New York 10011
212.652-2968

Seal

Issue	Date
1 100% Construction Documents	09/27/02
100% Struct./ CD Progress	07/01/02
Bridge Bldg Substructure	06/14/02

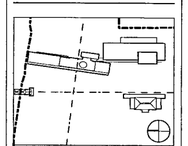

Job No 9908

Scale 1/2" = 1'-0"

Date September 27, 2002

Title WALL SYSTEM G PLAN, ELEVATION AND SECTIONS

Sheet No A339a

FOR OFFICIAL USE ONLY

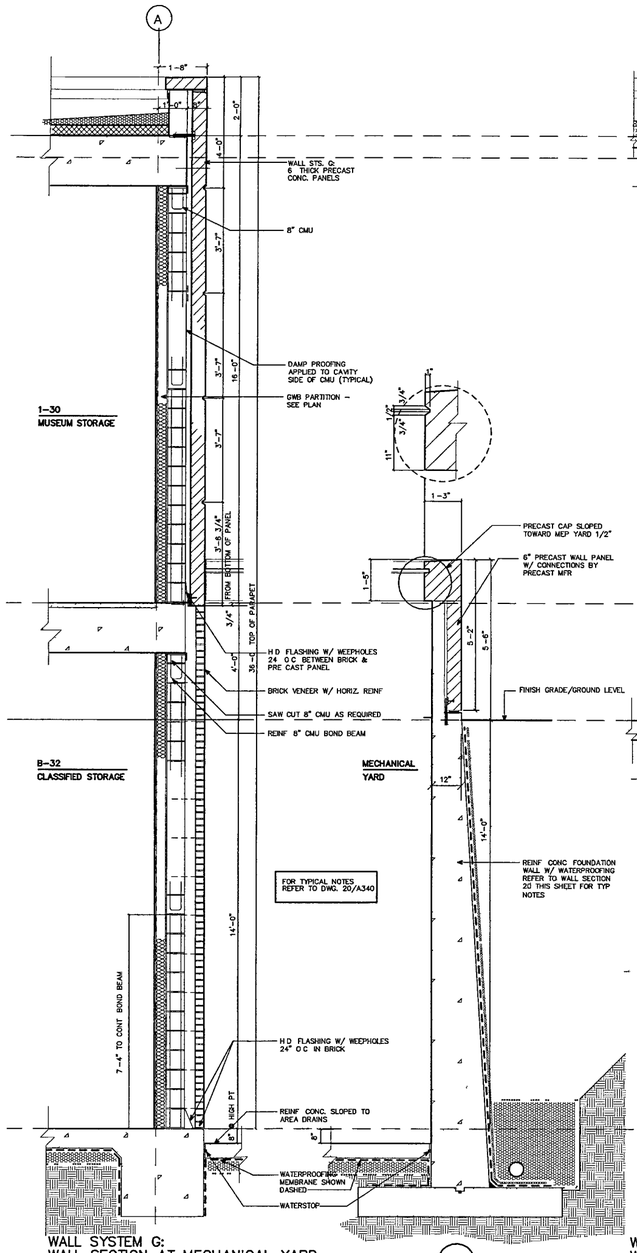

WALL SYSTEM G:
WALL SECTION AT MECHANICAL YARD (24)
SCALE. 1/2" = 1'-0"

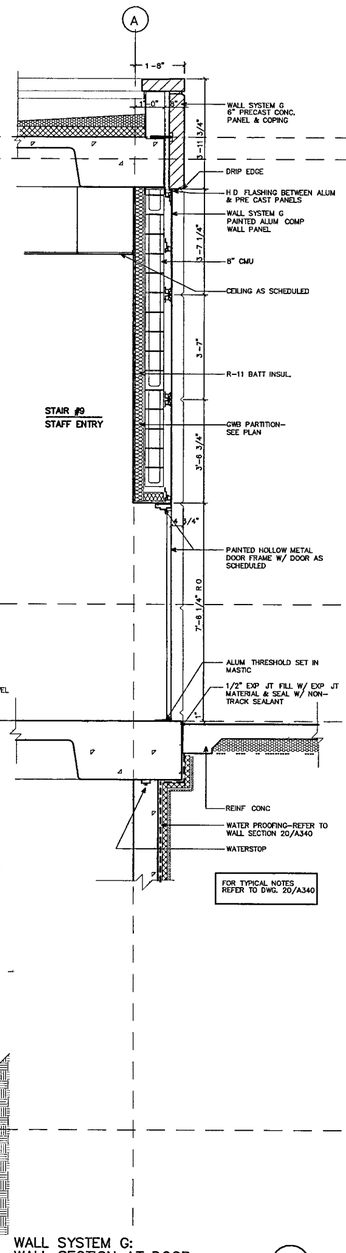

WALL SYSTEM G:
WALL SECTION AT DOOR (23)
SCALE. 1/2" = 1'-0"

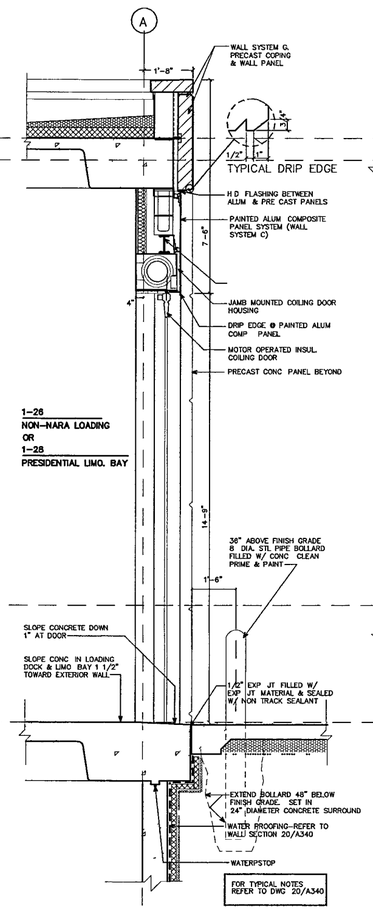

WALL SYSTEM G:
WALL SECTION AT LOADING DOCK (22)
SCALE. 1/2" = 1'-0"

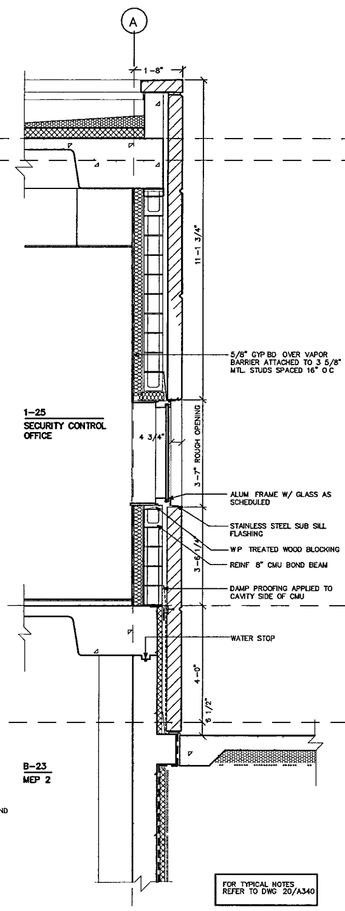

WALL SYSTEM G.
WALL SECTION AT WINDOW (21)
SCALE. 1/2" = 1'-0"

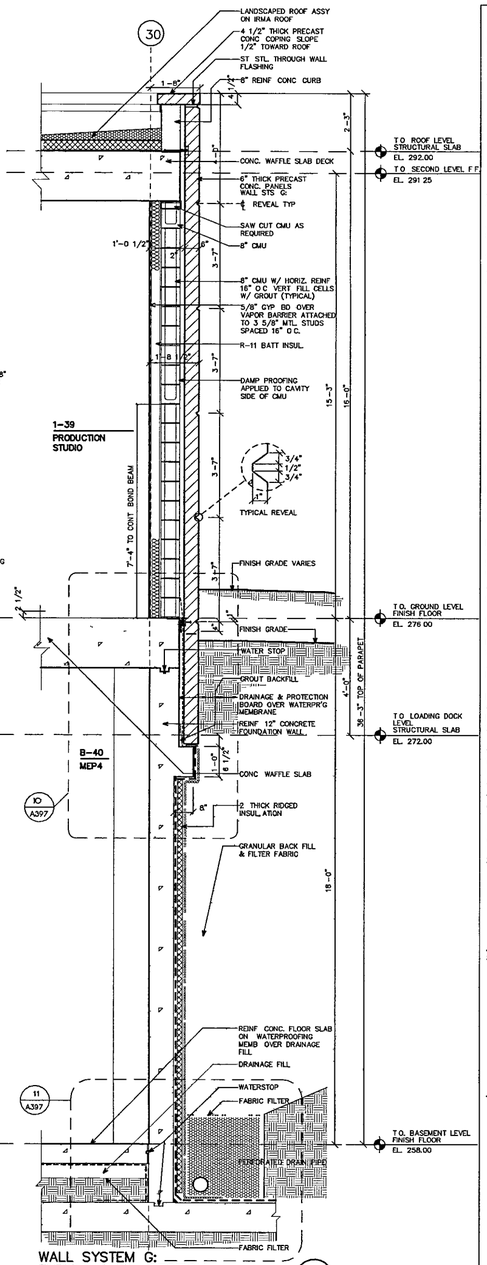

WALL SYSTEM G:
TYPICAL WALL SECTION (20)
SCALE. 1/2" = 1'-0"

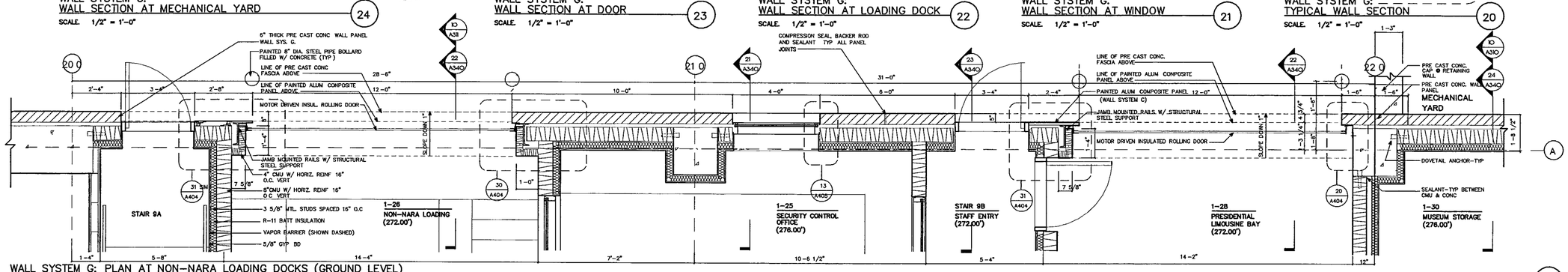

WALL SYSTEM G: PLAN AT NON-NARA LOADING DOCKS (GROUND LEVEL) (10)
SCALE. 1/2" = 1'-0"

WILLIAM J. CLINTON PRESIDENTIAL CENTER

LITTLE ROCK, ARKANSAS

Architect
POLSHEK PARTNERSHIP LLP
320 West 13th Street
New York, New York 10014
212.807.7171

Coordinating Architects
POLK STANLEY YEARY ARCHITECTS Ltd
700 South Schiller Street
Little Rock, Arkansas 72201
501.378.0679

WITSELL EVANS & RASCO
901 West Third Street
Little Rock, Arkansas 72201
501.374.5300

WOODS CARADINE ARCHITECTS
2200 South Main Street
Little Rock, Arkansas 72206
501.374.4060

Landscape Architects
HARGREAVES ASSOCIATES
118 Magazine Street
Cambridge, Massachusettes 02139
617.661.0070

LANDSCAPE ARCHITECTURE, Inc.
2300 Cottondale Lane Suite 202
Little Rock, Arkansas 72202
501.374.5610

Structural Engineer
LESLIE E. ROBERTSON ASSOC., RLLP
30 Broad Street, 47th Floor
New York, New York 10017
212.750.9000

MEP Engineers
FLACK + KURTZ Inc.
475 Fifth Avenue
New York, New York 10017
212.532.9600

CROMWELL ARCHITECTS ENGINEERS
101 South Spring Street
Little Rock, Arkansas 72201
501.372.2900

Curtainwall Consultant
R.A. HEINTGES ARCHITECTS
126 Fifth Avenue, 9th. Floor
New York, New York 10011
212.652-2966

Seal

POLK STANLEY YEARY ARCHITECTS REGISTRATION C-136 LITTLE ROCK, ARKANSAS

Issue	Date
100% Construction Documents	09/27/02
90% Progress Printing	08/30/02
100% Struct./CD Progress	07/01/02
100% Steel & Concrete CD	
& Architectural CD Progress	05/15/02
100% Design Development	03/01/02

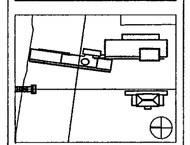

Job No. PPA. 9908 PSY. 426D

Scale 1/2" = 1'-0"

Date September 27, 2002

Title **WALL SYSTEM G: PLAN, ELEVATION AND SECTIONS**

Sheet No. **A340**

FOR OFFICIAL USE ONLY

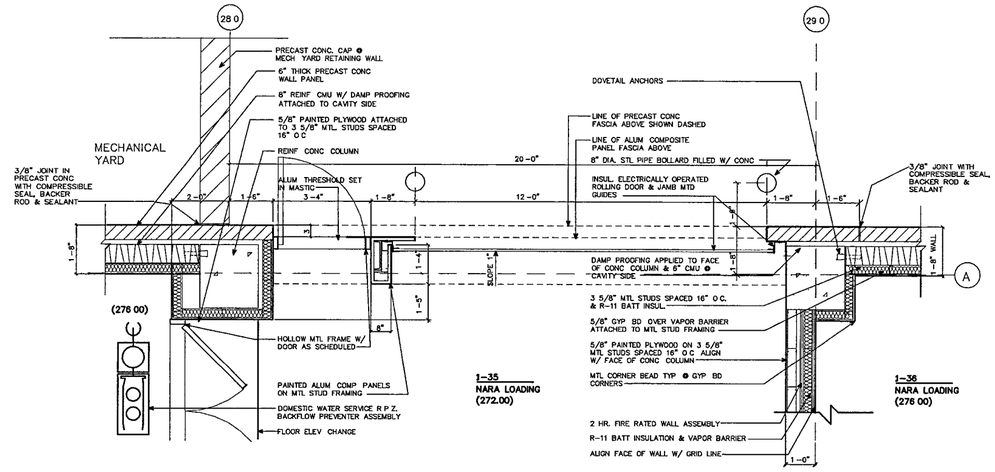

WALL SYSTEM G: PARTIAL PLAN AT NARA LOADING DOCK

SCALE. 1/2" = 1'-0"

30

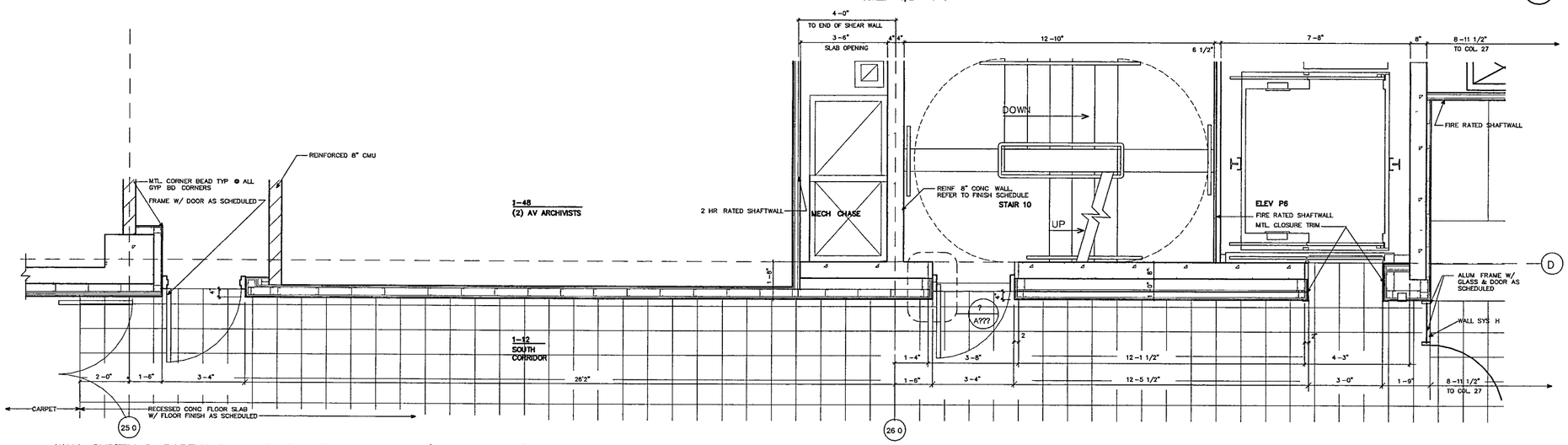

WALL SYSTEM G· PARTIAL PLAN AT ARCHIVE OFFICE LOBBY (GROUND LEVEL)

SCALE. 1/2" = 1'-0"

20

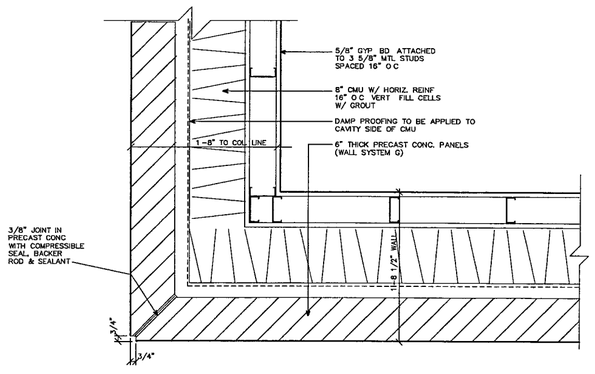

WALL SYSTEM G: TYPICAL CORNER

SCALE. 1 1/2" = 1'-0"

12

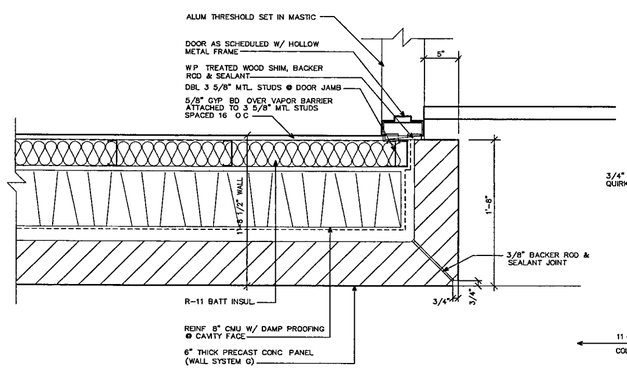

WALL SYSTEM G PLAN DETAIL AT STAIR #8

SCALE. 1 1/2" = 1'-0"

11

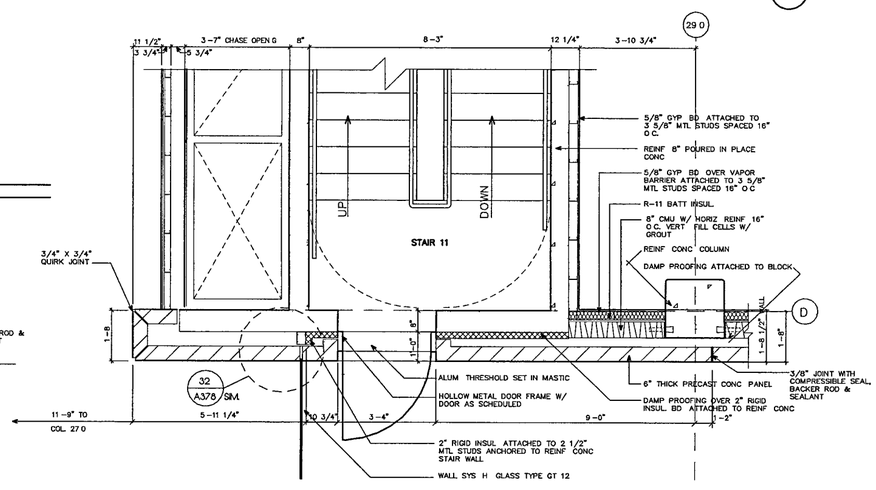

WALL SYSTEM G: PLAN DETAIL AT ARCHIVE LOBBY (GROUND LEVEL)

SCALE. 1/2" = 1'-0"

10

WILLIAM J. CLINTON PRESIDENTIAL CENTER

LITTLE ROCK, ARKANSAS

Architect

POLSHEK PARTNERSHIP LLP
320 West 13th Street
New York, New York 10014
212.807 7171

Coordinating Architects

POLK STANLEY YEARY ARCHITECTS Ltd
700 South Schiller Street
Little Rock, Arkansas 72201
501.378.0878

WITSELL EVANS & RASCO
901 West Third Street
Little Rock, Arkansas 72201
501.374.5300

WOODS CARADINE ARCHITECTS
2200 South Main Street
Little Rock, Arkansas 72206
501.374 4560

Landscape Architects

HARGREAVES ASSOCIATES
118 Magazine Street
Cambridge, Massachusetts 02139
617 661.0070

LANDSCAPE ARCHITECTURE, Inc.
2300 Cottondale Lane Suite 202
Little Rock, Arkansas 72202
501.374.5610

Structural Engineer

LESLIE E. ROBERTSON ASSOC , RLLP
30 Broad Street, 47th Floor
New York, New York 10017
212.750 9000

MEP Engineers

FLACK + KURTZ Inc.
475 Fifth Avenue
New York, New York 10017
212.532.9600

CROMWELL ARCHITECTS ENGINEERS
101 South Spring Street
Little Rock, Arkansas 72201
501.372.2900

Curtainwall Consultant

R.A. HEINTGES ARCHITECTS
126 Fifth Avenue, 9th. Floor
New York, New York 10011
212.652-2968

Seal

Issue	Date
100% Construction Documents	09/27/02
90% Progress Printing	08/30/02
100% Struct/ CD Progress	07/01/02
100% Steel & Concrete CD	
& Architectural CD Progress	05/15/02
100% Design Development	03/01/02

Job No PPA. 6906 PSY 426D

Scale AS NOTED

Date September 27, 2002

Title **WALL SYSTEM G: PLANS**

Sheet No **A341**

FOR OFFICIAL USE ONLY

THURSDAY SEPTEMBER 26 2002 11 40 AM

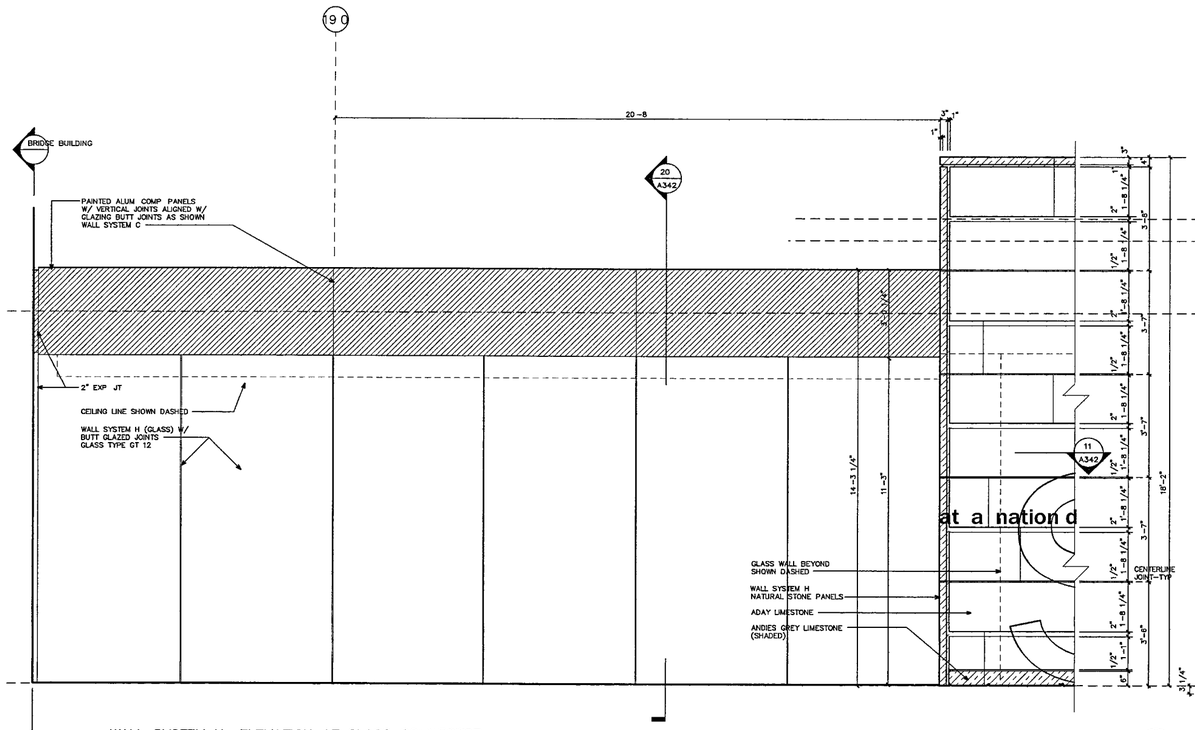

WALL SYSTEM H ELEVATION AT GLASS CONNECTOR

SCALE: 1/2" = 1'-0"

21

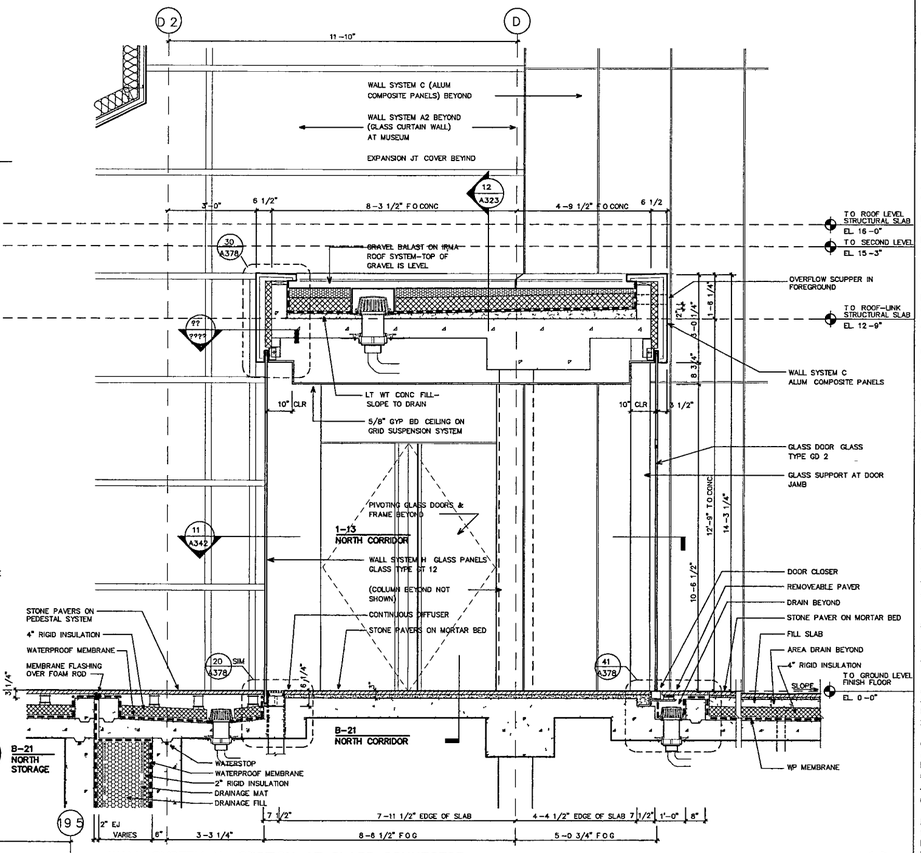

WALL SYSTEM H. SECTION AT GLASS CONNECTOR

SCALE: 1/2" = 1'-0"

20

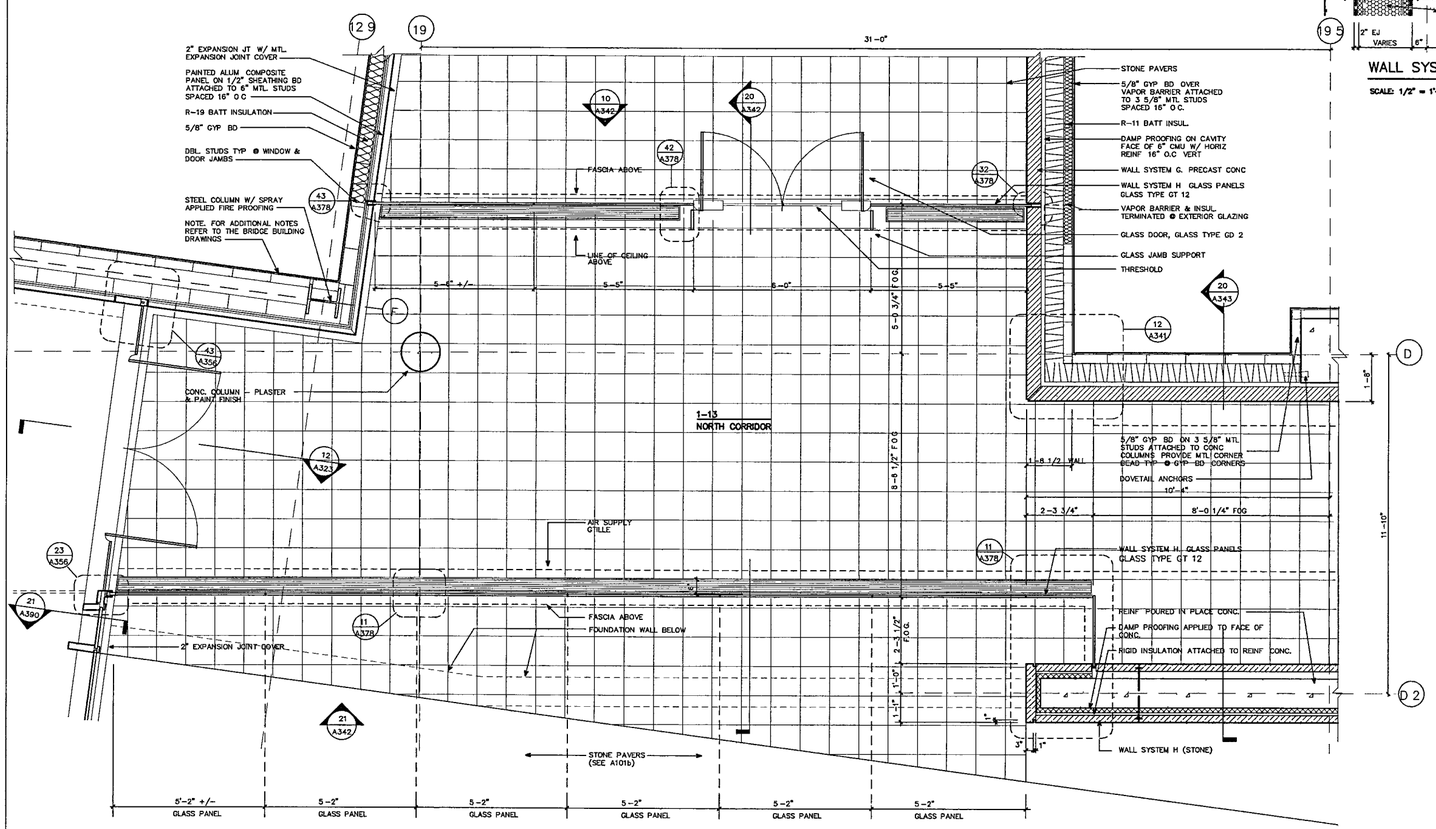

WALL SYSTEM H: PLAN DETAIL AT GLASS CONNECTOR (GROUND LEVEL)

SCALE: 1/2" = 1'-0"

11

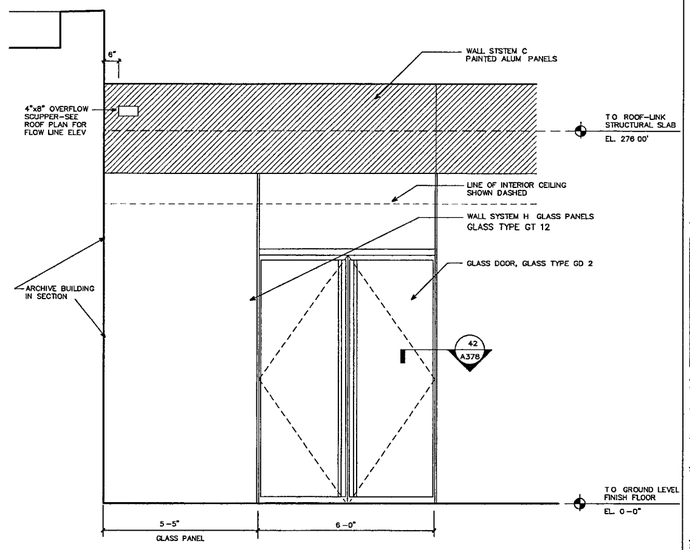

WALL SYSTEM H: PART. CORRIDOR ELEVATION

SCALE: 1/2" = 1'-0"

10

WILLIAM J. CLINTON PRESIDENTIAL CENTER

LITTLE ROCK, ARKANSAS

Architect

POLSHEK PARTNERSHIP LLP
320 West 13th Street
New York, New York 10014
212.807.7171

Coordinating Architects

POLK STANLEY YEARY ARCHITECTS Ltd
700 South Schiller Street
Little Rock, Arkansas 72201
501.378.0878

WITSELL EVANS & RASCO
901 West Third Street
Little Rock, Arkansas 72201
501.374.5300

WOODS CARADINE ARCHITECTS
2200 South Main Street
Little Rock, Arkansas 72206
501.374 4060

Landscape Architects

HARGREAVES ASSOCIATES
118 Magazine Street
Cambridge, Massachusettes 02139
617 661.0070

LANDSCAPE ARCHITECTURE, Inc
2300 Cottondale Lane Suite 202
Little Rock, Arkansas 72202
501.374.5610

Structural Engineer

LESLIE E. ROBERTSON ASSOC , RLLP
30 Broad Street, 47th Floor
New York, New York 10017
212.750.9000

MEP Engineers

FLACK + KURTZ Inc.
475 Fifth Avenue
New York, New York 10017
212.532.9600

CROMWELL ARCHITECTS ENGINEERS
101 South Spring Street
Little Rock, Arkansas 72201
501.372.2900

Curtainwall Consultant

R.A. HEINTGES ARCHITECTS
126 Fifth Avenue, 9th Floor
New York, New York 10011
212.652-2966

Seal

POLK STANLEY YEARY ARCHITECTS PLLC REGISTRATION C-135 LITTLE ROCK, ARKANSAS

Issue	Date
100% Construction Documents	09/27/02
90% Progress Printing	08/30/02
100% Struct./ CD Progress	07/01/02
100% Steel & Concrete CD	
& Architectural CD Progress	05/15/02
100% Design Development	03/01/02

Job No PPA. 9908 PSY 4260

Scale 1/4" = 1'-0"

Date September 27, 2002

Title WALL SYSTEM H: PLANS/SECTIONS AT NECK CONNECTOR

Sheet No **A342**

FOR OFFICIAL USE ONLY

THURSDAY SEPTEMBER 26 2002 11 20 AM

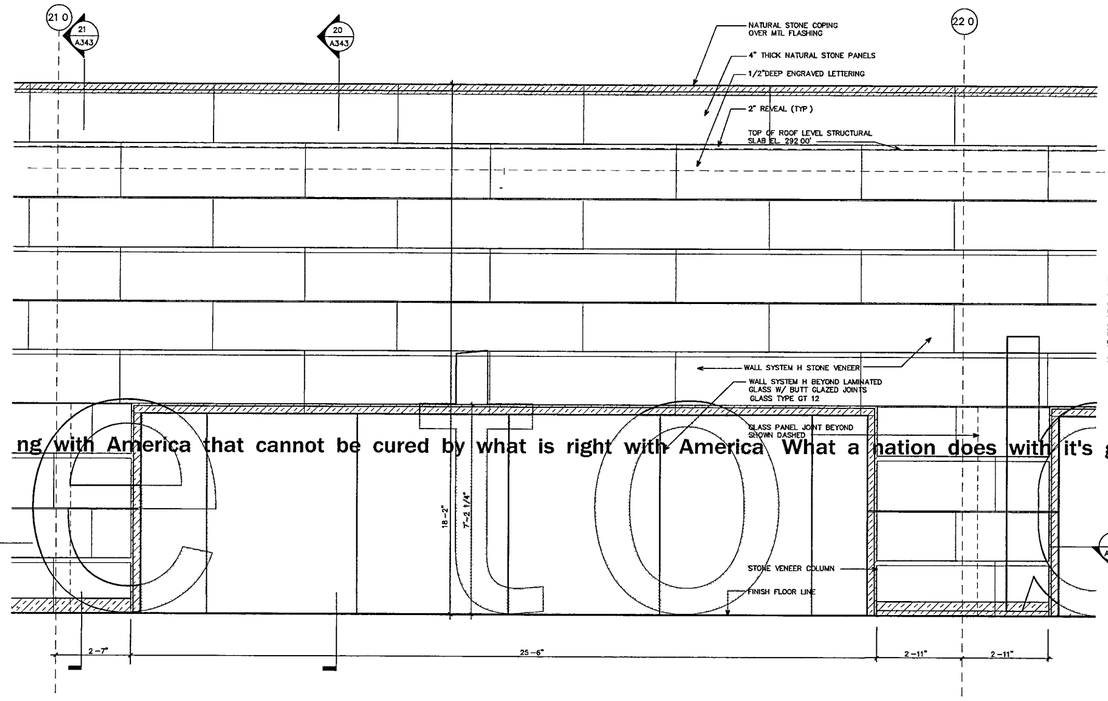

ng with America that cannot be cured by what is right with America What a nation does with it's go

WALL SYSTEM H· PARTIAL ELEVATION AT STONE WALL OPENINGS (22)

SCALE 1/2" = 1'-0"

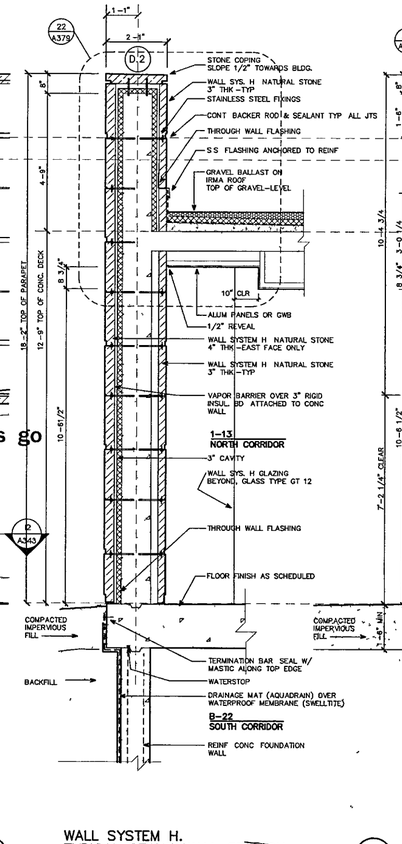

WALL SYSTEM H.
TYPICAL STONE WALL SECTION (21)

SCALE 1/2" = 1'-0"

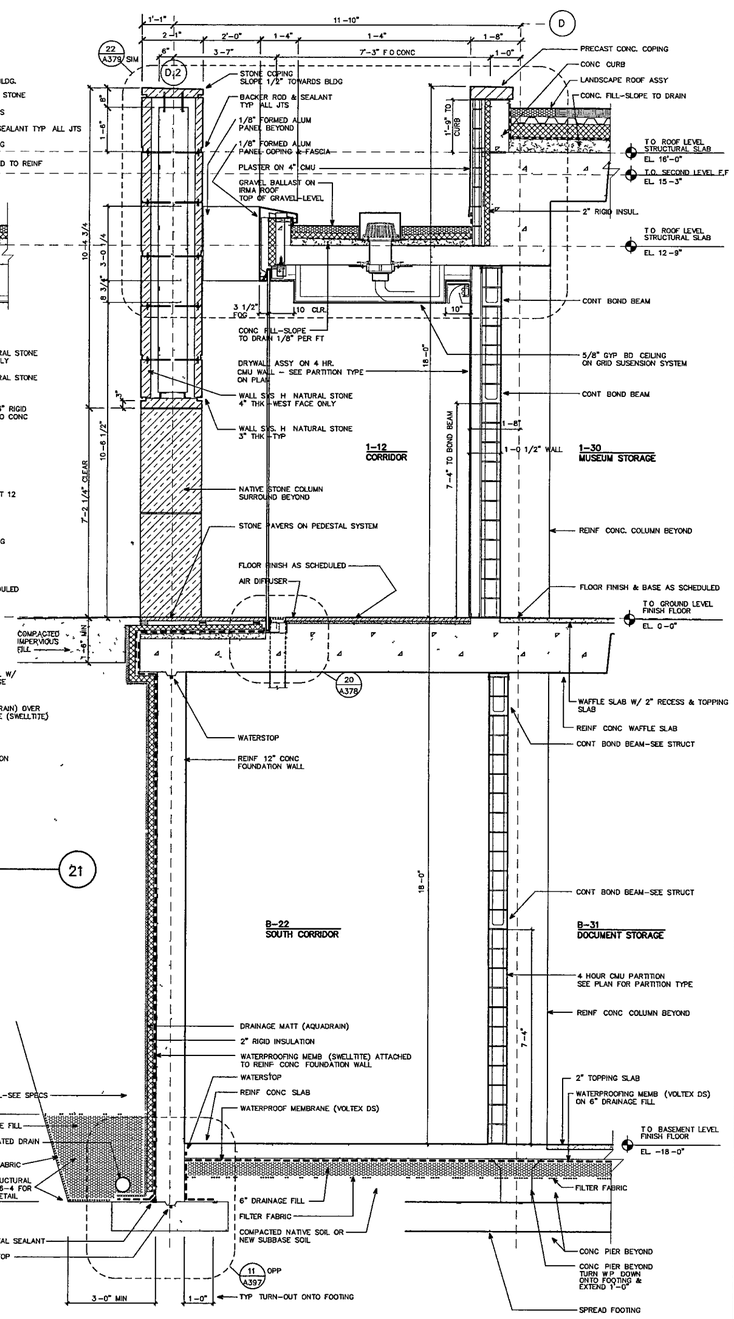

WALL SYSTEM H:
TYPICAL STONE WALL SECTION (20)

SCALE 1/2" = 1'-0"

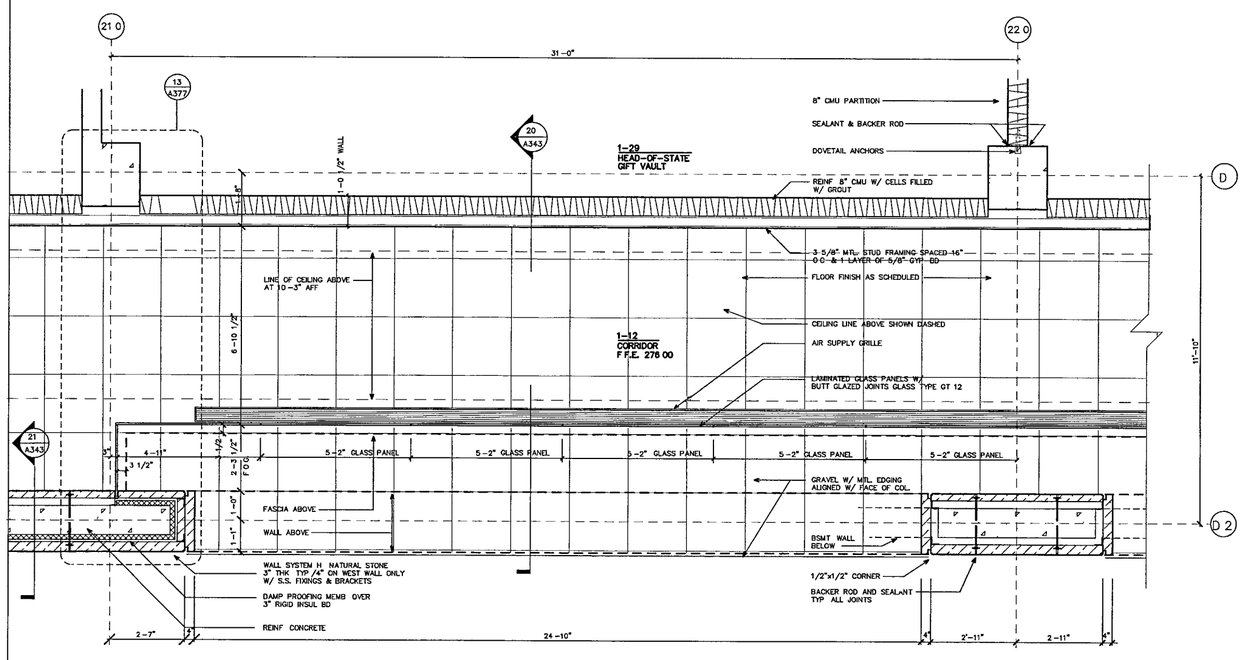

WALL SYSTEM H PARTIAL PLAN AT STONE WALL OPENINGS (GROUND LEVEL) (12)

SCALE 1/2" = 1'-0"

WILLIAM J. CLINTON PRESIDENTIAL CENTER

LITTLE ROCK, ARKANSAS

Architect

POLSHEK PARTNERSHIP LLP
320 West 13th Street
New York, New York 10014
212.807 7171

Coordinating Architects

POLK STANLEY YEARY ARCHITECTS Ltd
700 South Schiller Street
Little Rock, Arkansas 72201
501.378.0878

WITSELL EVANS & RASCO
901 West Third Street
Little Rock, Arkansas 72201
501.374.5300

WOODS CARADINE ARCHITECTS
2200 South Main Street
Little Rock, Arkansas 72206
501.374.4060

Landscape Architects

HARGREAVES ASSOCIATES
118 Magazine Street
Cambridge, Massachusetts 02139
617 661 0070

LANDSCAPE ARCHITECTURE, Inc.
2300 Cottondale Lane Suite 202
Little Rock, Arkansas 72202
501.374.5810

Structural Engineer

LESLIE E ROBERTSON ASSOC., RLLP
30 Broad Street, 47th Floor
New York, New York 10017
212 750.9000

MEP Engineers

FLACK + KURTZ Inc.
475 Fifth Avenue
New York, New York 10017
212.532.9600

CROMWELL ARCHITECTS ENGINEERS
101 South Spring Street
Little Rock, Arkansas 72201
501.372.2900

Curtainwall Consultant

R.A. HEINTGES ARCHITECTS
126 Fifth Avenue, 9th. Floor
New York, New York 10011
212.652-2966

Seal

Issue	Date
100% Construction Documents	09/27/02
90% Progress Printing	08/30/02
100% Struct./CD Progress	07/01/02
100% Steel & Concrete CD	07/01/02
& Architectural CD Progress	05/15/02
100% Design Development	03/01/02

Job No. PPA 9908 PSY 428D

Scale 1/2" = 1'-0"

Date September 27, 2002

Title

WALL SYSTEM H PLAN, ELEVATION AND SECTIONS

Sheet No.

A343

FOR OFFICIAL USE ONLY

THURSDAY SEPTEMBER 26, 2002 11:03 AM

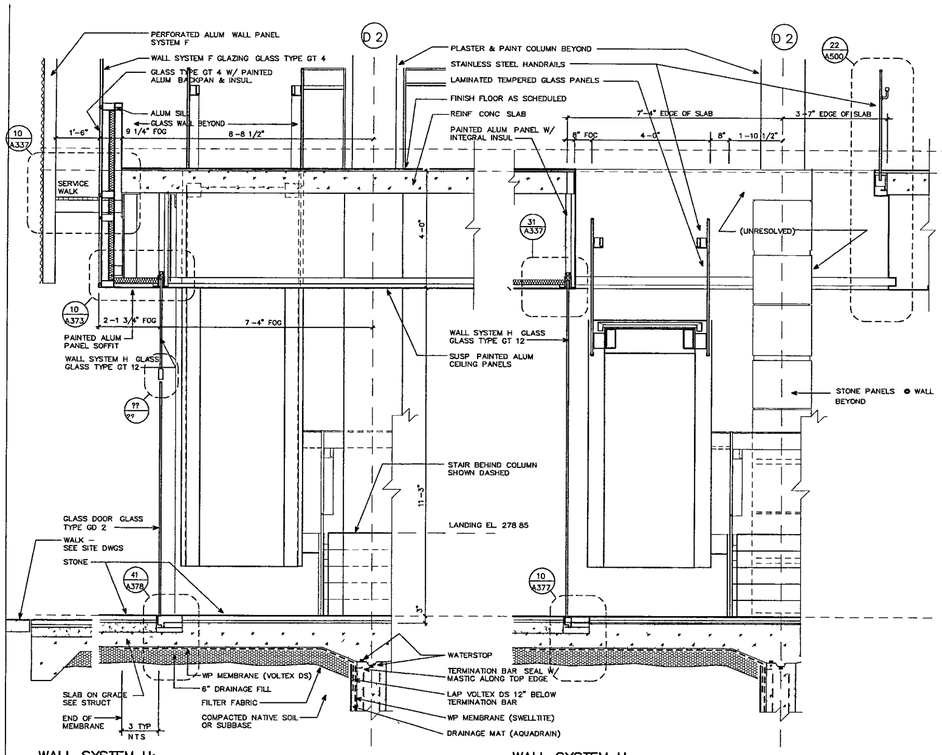

WALL SYSTEM H:
SECT THROUGH ARCHIVE–LOBBY ENTRY (22)
SCALE. 1/2" = 1'-0"

WALL SYSTEM H·
SECT. THROUGH ARCHIVE–LOBBY ENTRY (21)
SCALE. 1/2" = 1'-0"

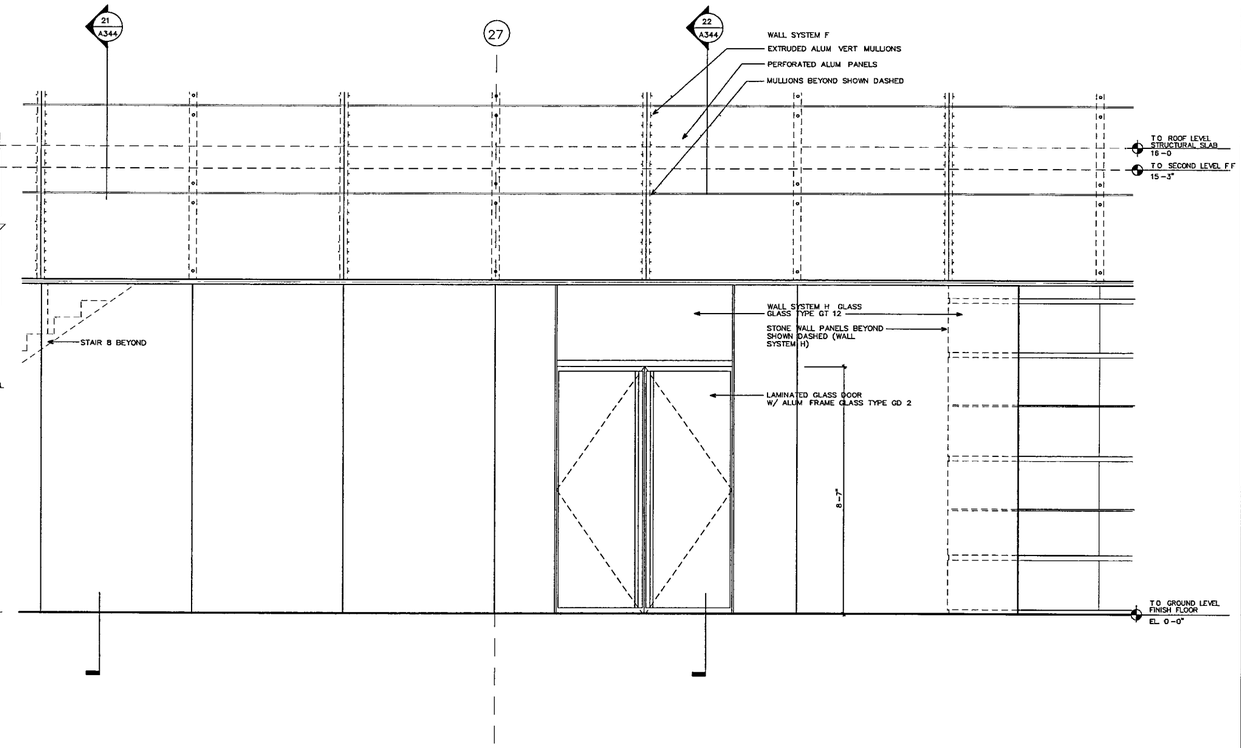

WALL SYSTEM H. PARTIAL WEST ELEV.
SCALE. 1/2" = 1'-0" (20)

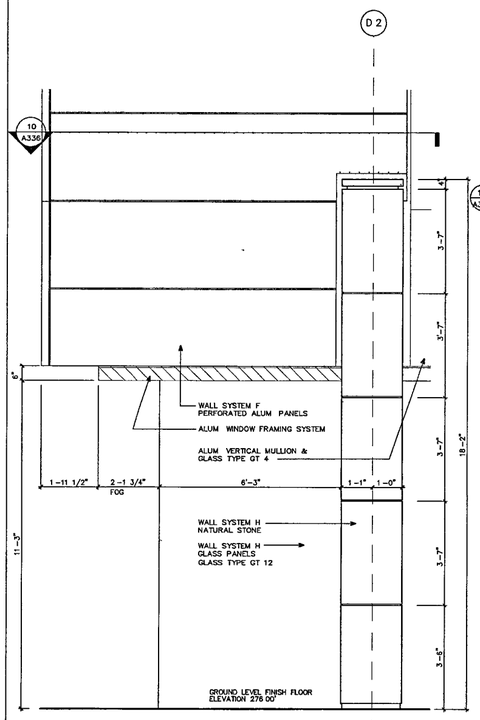

WALL SYSTEM H: PARTIAL SOUTH ELEV.
SCALE. 1/2" = 1'-0" (11)

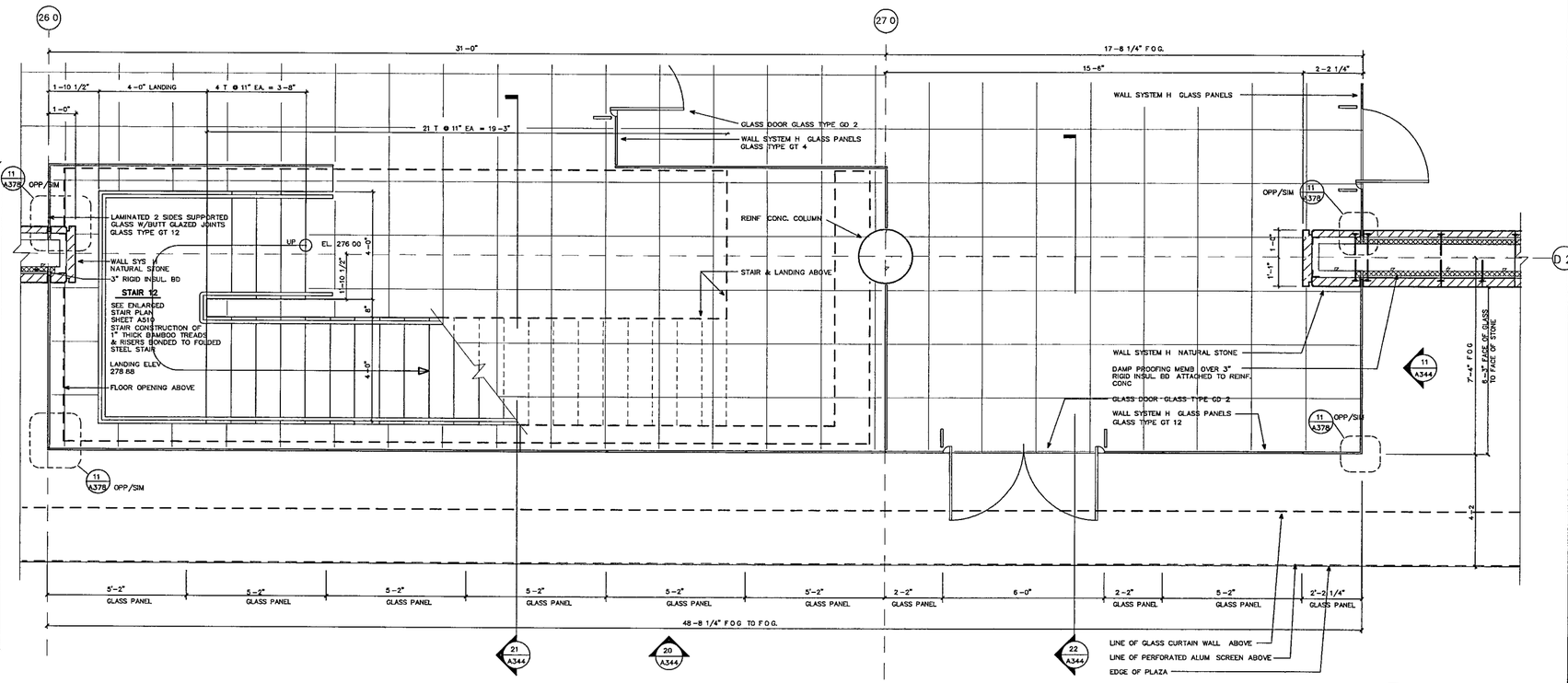

WALL SYSTEM H: PARTIAL PLAN (GROUND LEVEL)
SCALE. 1/2" = 1'-0" (10)

WILLIAM J. CLINTON PRESIDENTIAL CENTER

LITTLE ROCK, ARKANSAS

Architect

POLSHEK PARTNERSHIP LLP
320 West 13th Street
New York, New York 10014
212.807 7171

Coordinating Architects

POLK STANLEY YEARY ARCHITECTS Ltd
700 South Schiller Street
Little Rock, Arkansas 72201
501.378.0878

WITSELL EVANS & RASCO
901 West Third Street
Little Rock, Arkansas 72201
501.374.5300

WOODS CARADINE ARCHITECTS
2200 South Main Street
Little Rock, Arkansas 72206
501.374.4060

Landscape Architects

HARGREAVES ASSOCIATES
118 Magazine Street
Cambridge, Massachusettes 02139
617 661.0070

LANDSCAPE ARCHITECTURE, Inc.
2300 Cottondale Lane Suite 202
Little Rock, Arkansas 72202
501.374.5610

Structural Engineer

LESLIE E. ROBERTSON ASSOC., RLLP
30 Broad Street, 47th Floor
New York, New York 10017
212.750 9000

MEP Engineers

FLACK + KURTZ Inc.
475 Fifth Avenue
New York, New York 10017
212.532.9600

CROMWELL ARCHITECTS ENGINEERS
101 South Spring Street
Little Rock, Arkansas 72201
501.372.2900

Curtainwall Consultant

R.A. HEINTGES ARCHITECTS
126 Fifth Avenue, 9th Floor
New York, New York 10011
212.652-2966

Seal

Issue	Date
100% Construction Documents	09/27/02
90% Progress Printing	08/30/02
100% Struct/CD Progress	07/01/02
100% Steel & Concrete CD	
% Architectural CD Progress	05/15/02
100% Design Development	03/01/02

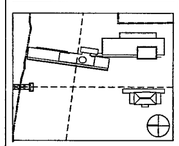

Job No PPA 9908 PSY 4260

Scale 1/2" = 1'-0"

Date September 27, 2002

Title **WALL SYSTEM H: PLAN & SECTIONS**

Sheet No **A344**

FOR OFFICIAL USE ONLY

THURSDAY SEPTEMBER 26, 2002 1:14 AM

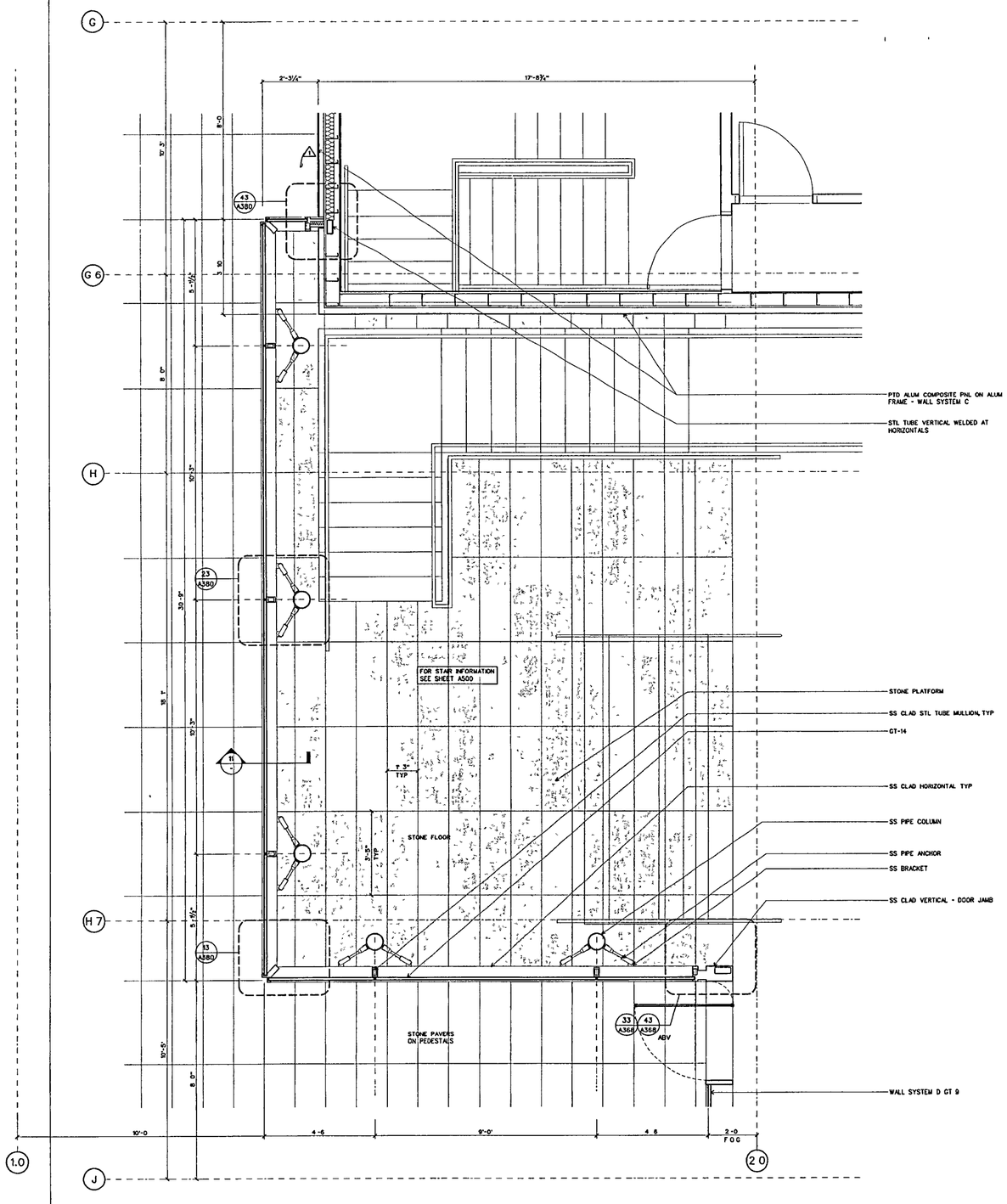

WALL SYSTEM J: PLAN SECTION AT NORTH BOX

SCALE ½" = 1'-0"

DETAILS/DTL-CWJ (12)

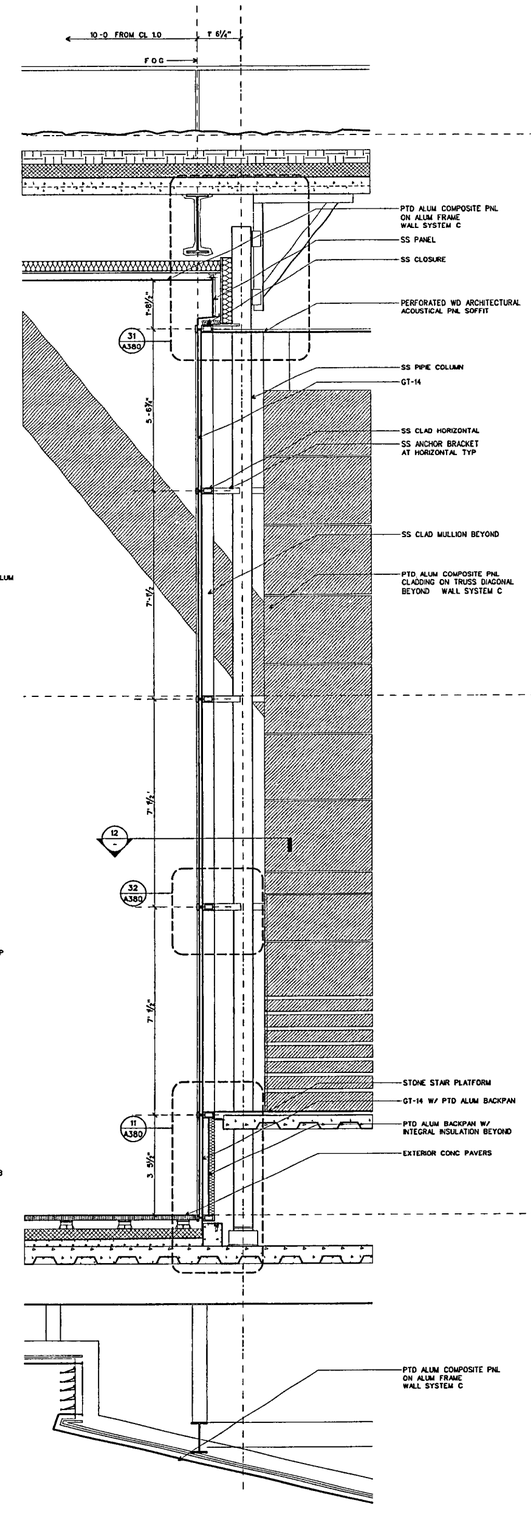

WALL SYSTEM J: WALL SECTION AT NORTH BOX

SCALE ½" = 1'-0"

DETAILS/DTL-CWJ (11)

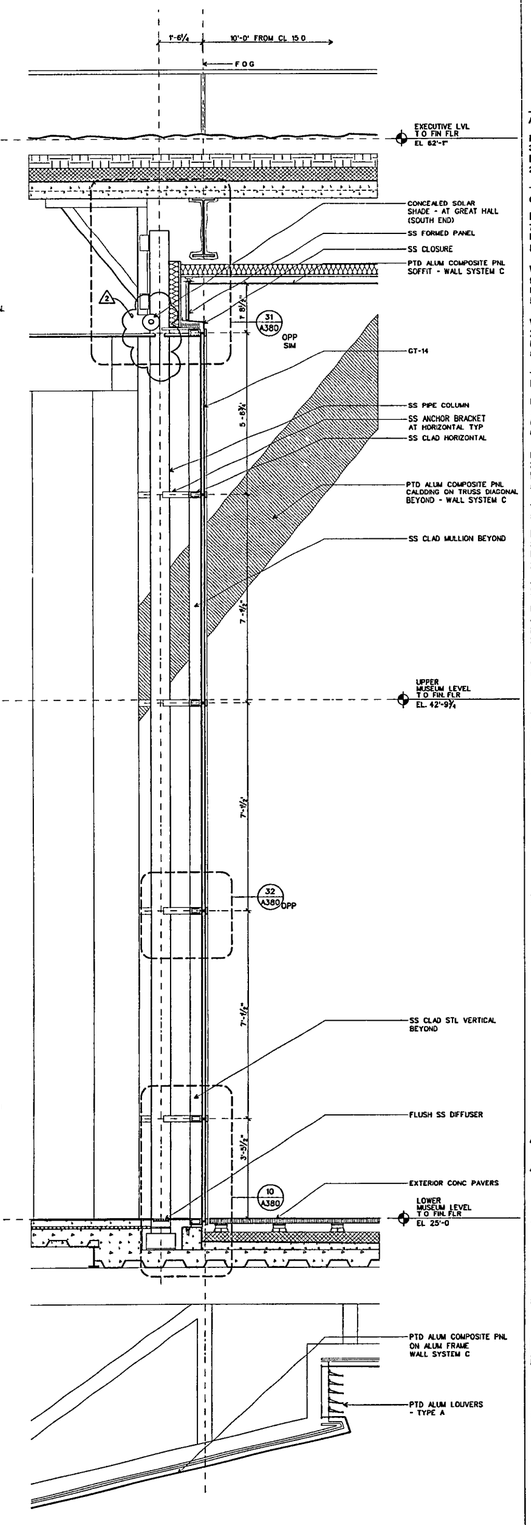

WALL SYSTEM J: WALL SECTION AT SOUTH BOX

SCALE ½" = 1'-0"

DETAILS/DTL-CWJ (10)

WILLIAM J CLINTON PRESIDENTIAL CENTER

LITTLE ROCK, ARKANSAS

Architect

POLSHEK PARTNERSHIP LLP
320 West 13th Street
New York, New York 10014
212 807 7171

Coordinating Architects

POLK STANLEY YEARY ARCHITECTS Ltd
700 South Schiller Street
Little Rock, Arkansas 72201
501 378 0878

WITSELL EVANS RASCO
901 West Third Street
Little Rock, Arkansas 72201
501 374 5300

WOODS CARADINE ARCHITECTS
2200 South Main Street
Little Rock Arkansas 72206
501 374 4060

Landscape Architects

HARGREAVES ASSOCIATES
118 Magazine Street
Cambridge Massachusettes 02139
617 661 0070

LANDSCAPE ARCHITECTURE, Inc.
2300 Cottondale Lane Suite 202
Little Rock, Arkansas 72202
501 374 5610

Structural Engineer

LESLIE E. ROBERTSON ASSOC., RLLP
30 Broad Street, 47th Floor
New York, New York 10004
212 750 9000

MEP Engineers

FLACK + KURTZ Inc.
475 Fifth Avenue
New York New York 10017
212 532 9600

CROMWELL ARCHITECTS ENGINEERS
101 South Spring Street
Little Rock, Arkansas 72201
501 372 2900

Curtainwall Consultant

R. A. HEINTGES ARCHITECTS
126 Fifth Avenue 9th Floor
New York, New York 10011
212 652-2966

Seal

RICHARD OLOOT REGISTERED ARCHITECT 3405 ARKANSAS

Issue	Date
Addendum #2	11/15/02
100% Construction Documents	09/27/02
90% Progress Printing	08/30/02
100% Struct./ CD Progress	07/01/02
100% Design Development	03/01/02

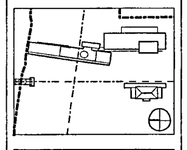

Job No: 9908

Scale: 1/2" = 1'-0"

Date: September 27, 2002

Title: WALL SYSTEM J PLAN AND SECTIONS

Sheet No: A345

FOR OFFICIAL USE ONLY

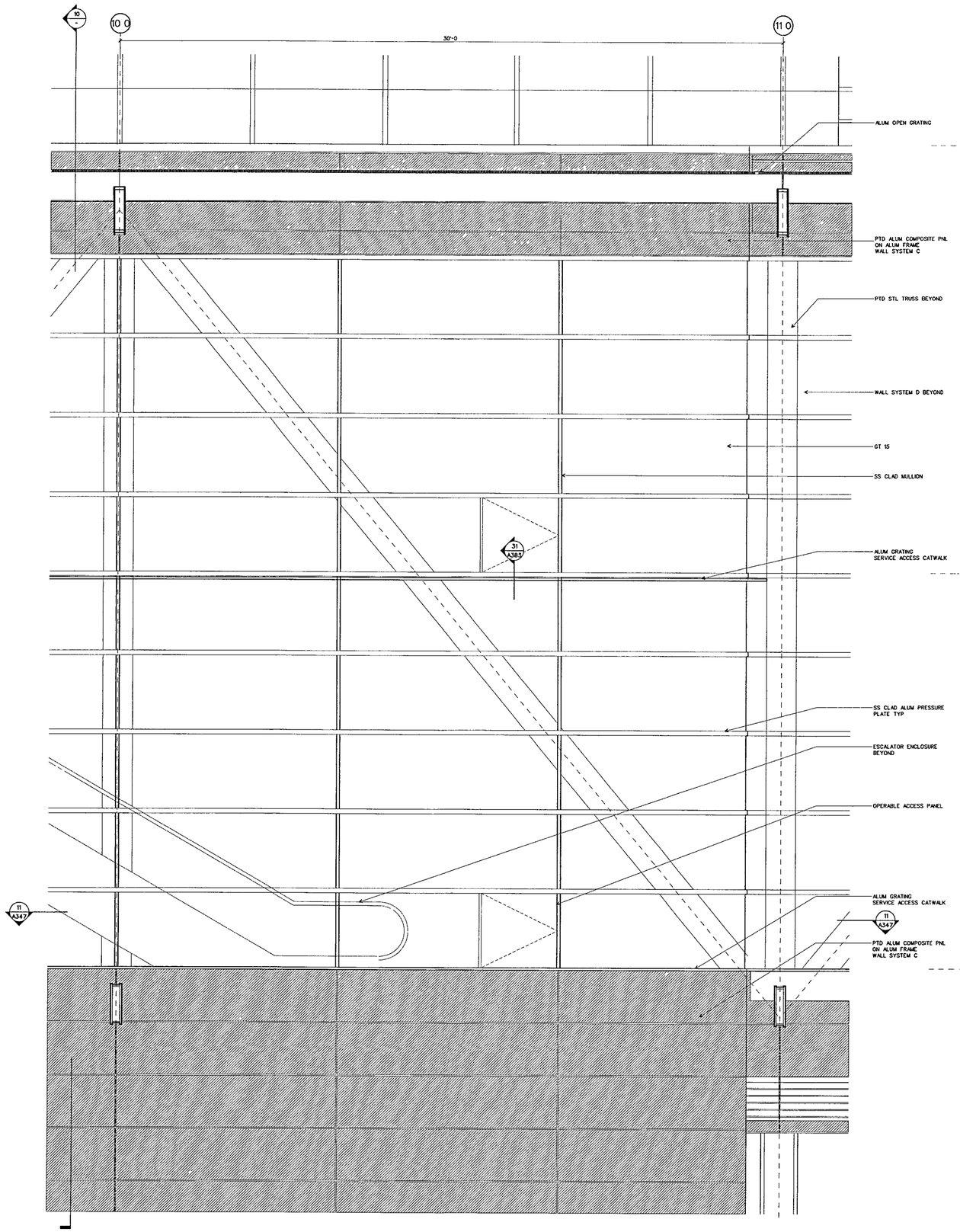

WALL SYSTEM K: ELEVATION AT TYPICAL BAY

SCALE ½" = 1'-0 DETAILS/DTL-CWK (12)

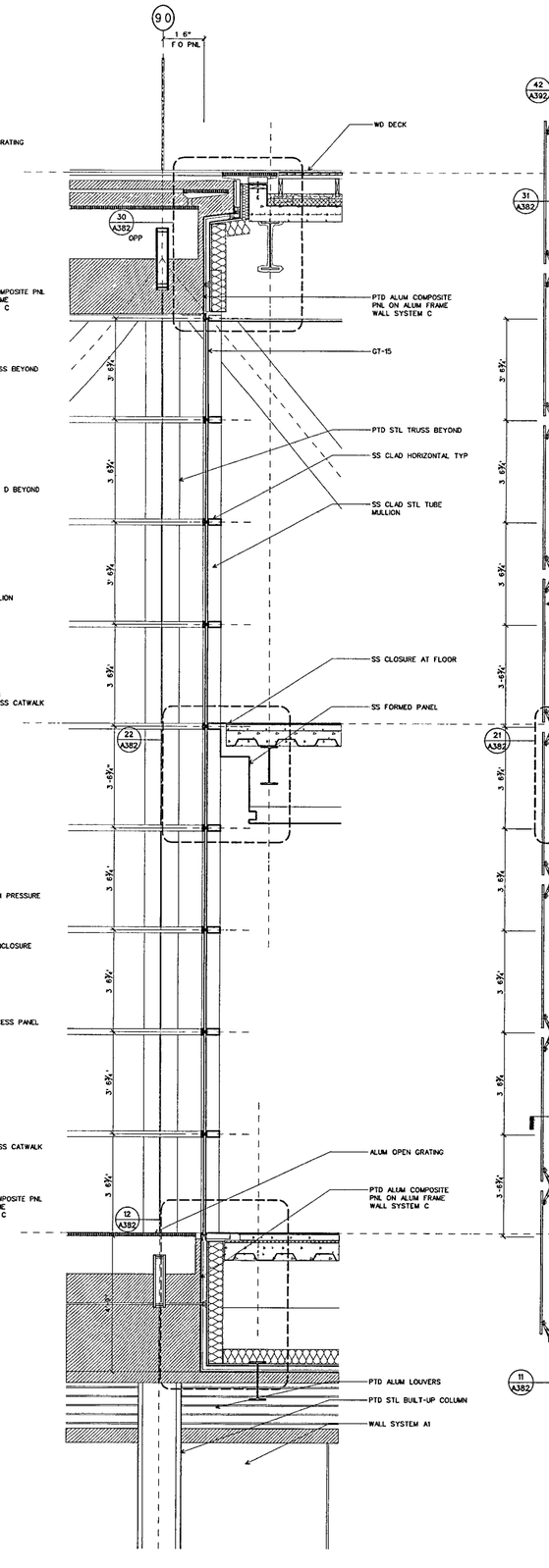

WALL SYSTEM K: WALL SECTION AT ESCALATOR

SCALE ½" = 1'-0 DETAILS/DTL-CWK (11)

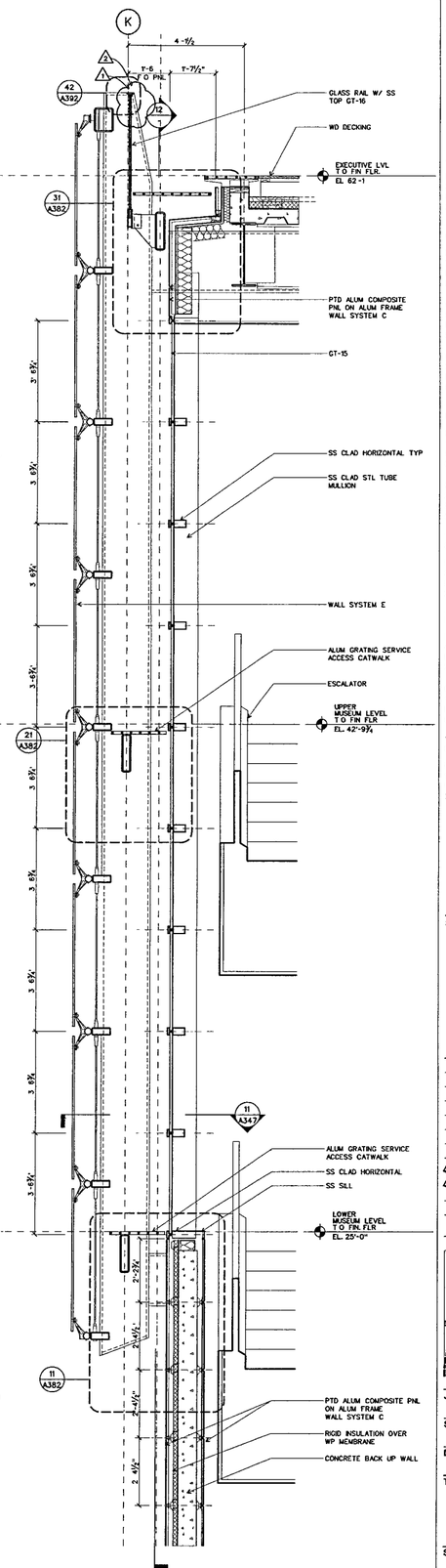

WALL SYSTEM E/K WALL SECTION AT ESCALATOR

SCALE ½ = 1'-0" DETAILS/DTL-CWK (10)

WILLIAM J CLINTON PRESIDENTIAL CENTER

LITTLE ROCK, ARKANSAS

Architect

POLSHEK PARTNERSHIP LLP
320 West 13th Street
New York, New York 10014
212 807 7171

Coordinating Architects

POLK STANLEY YEARY ARCHITECTS Ltd
700 South Schiller Street
Little Rock, Arkansas 72201
501 378 0878

WITSELL EVANS RASCO
901 West Third Street
Little Rock, Arkansas 72201
501 374 5300

WOODS CARADINE ARCHITECTS
2200 South Main Street
Little Rock, Arkansas 72206
501 374 4060

Landscape Architects

HARGREAVES ASSOCIATES
118 Magazine Street
Cambridge Massachusettes 02139
617 661 0070

LANDSCAPE ARCHITECTURE Inc
2300 Cottondale Lane Suite 202
Little Rock, Arkansas 72202
501 374.5610

Structural Engineer

LESLIE E ROBERTSON ASSOC , RLLP
30 Broad Street, 47th Floor
New York New York 10004
212 750 9000

MEP Engineers

FLACK + KURTZ Inc.
475 Fifth Avenue
New York, New York 10017
212 532 9600

CROMWELL ARCHITECTS ENGINEERS
101 South Spring Street
Little Rock, Arkansas 72201
501 372.2900

Curtainwall Consultant

R A. HEINTGES ARCHITECTS
126 Fifth Avenue 6th Floor
New York New York 10011
212 652-2966

Seal

RICHARD OLCOTT ARCHITECT 3405 ARKANSAS

Issue	Date
2 100% Construction Documents	09/27/02
1 90% Progress Printing	08/30/02
100% Struct./ CD Progress	07/01/02
100% Design Development	03/01/02

Job No 9908

Scale 1/2" = 1'-0"

Date September 27 2002

Title

WALL SYSTEM K + E ELEVATION AND SECTIONS

Sheet No

A346

FOR OFFICIAL USE ONLY

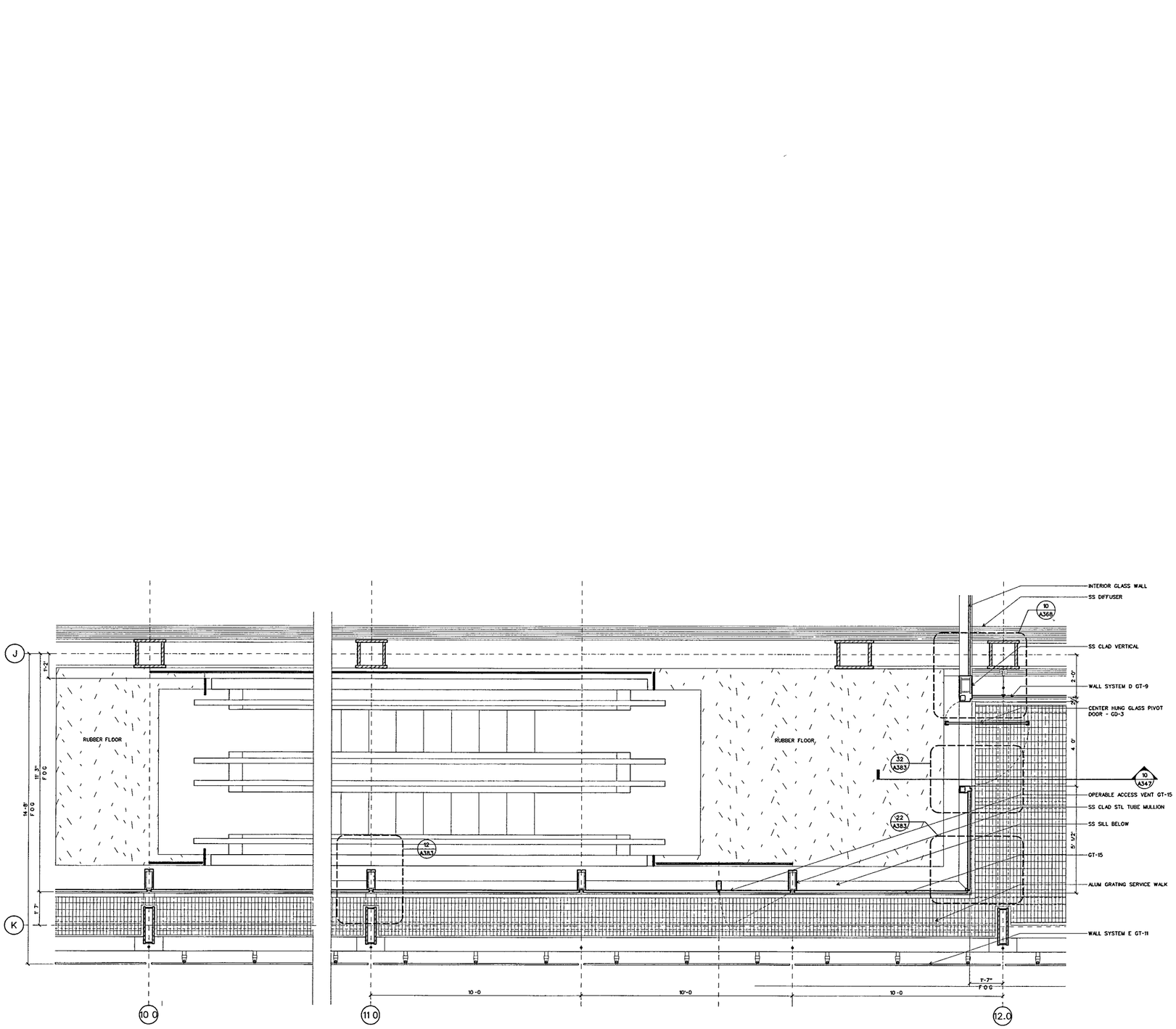

WALL SYSTEM K: PLAN SECTION AT ESCALATOR

SCALE 1/2" = 1'-0"

DETAILS/DTL-CWK2 11

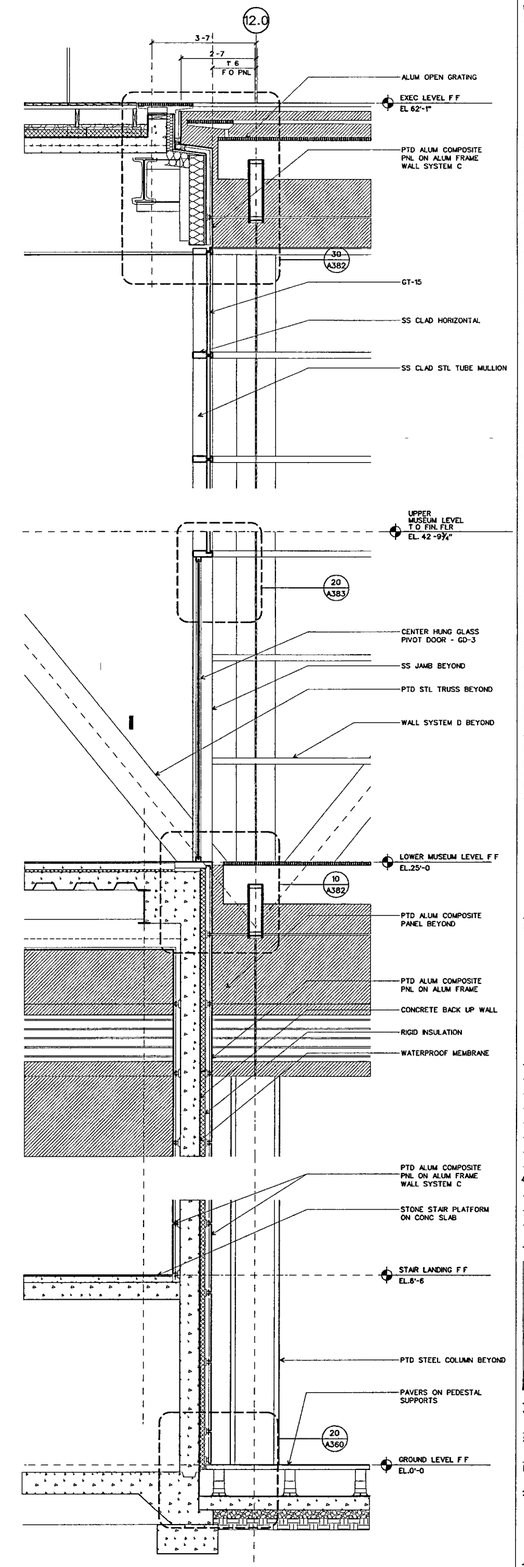

WALL SYSTEM K- WALL SECTION AT ESCALATOR

SCALE 1/2" = 1'-0'

DETAILS/DTL-CWK2 10

WILLIAM J CLINTON PRESIDENTIAL CENTER

LITTLE ROCK, ARKANSAS

Architect

POLSHEK PARTNERSHIP LLP
320 West 13th Street
New York, New York 10014
212.807 7171

Coordinating Architects

POLK STANLEY YEARY ARCHITECTS Ltd
700 South Schiller Street
Little Rock, Arkansas 72201
501 378 0878

WITSELL EVANS RASCO
901 West Third Street
Little Rock, Arkansas 72201
501 374 5300

WOODS CARADINE ARCHITECTS
2200 South Main Street
Little Rock Arkansas 72206
501 374 4060

Landscape Architects

HARGREAVES ASSOCIATES
118 Magazine Street
Cambridge, Massachusettes 02139
617 661 0070

LANDSCAPE ARCHITECTURE Inc
2300 Cottondale Lane Suite 202
Little Rock Arkansas 72202
501 374 5610

Structural Engineer

LESLIE E ROBERTSON ASSOC RLLP
30 Broad Street, 47th Floor
New York, New York 10004
212.750 9000

MEP Engineers

FLACK + KURTZ Inc.
475 Fifth Avenue
New York, New York 10017
212 532 9600

CROMWELL ARCHITECTS ENGINEERS
101 South Spring Street
Little Rock Arkansas 72201
501 372.2900

Curtainwall Consultant

R. A. HEINTGES ARCHITECTS
126 Fifth Avenue, 9th Floor
New York, New York 10011
212.652-2966

Seal

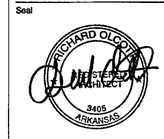

Issue	Date
100% Constructon Documents	09/27/02
1 90% Progress Printing	08/30/02
100% Struct/ CD Progress	07/01/02
Bridge Bldg Substructure	06/14/02
100% Design Development	03/01/02

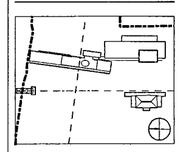

Job No 9908

Scale 1/2" = 1'-0"

Date September 27, 2002

Title

WALL SYSTEM K
PLAN AND SECTIONS

Sheet No

A347

FOR OFFICIAL USE ONLY

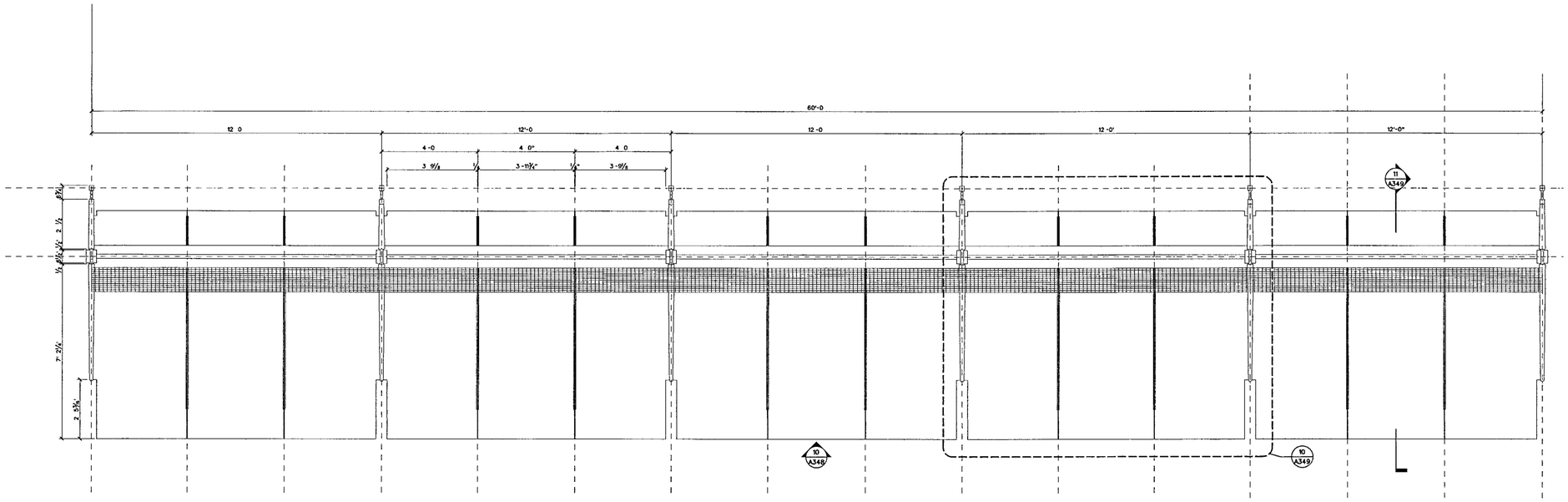

ENTRANCE CANOPY: PLAN

SCALE 1/2" = 1'-0"

B-CANOPY-SECT 20

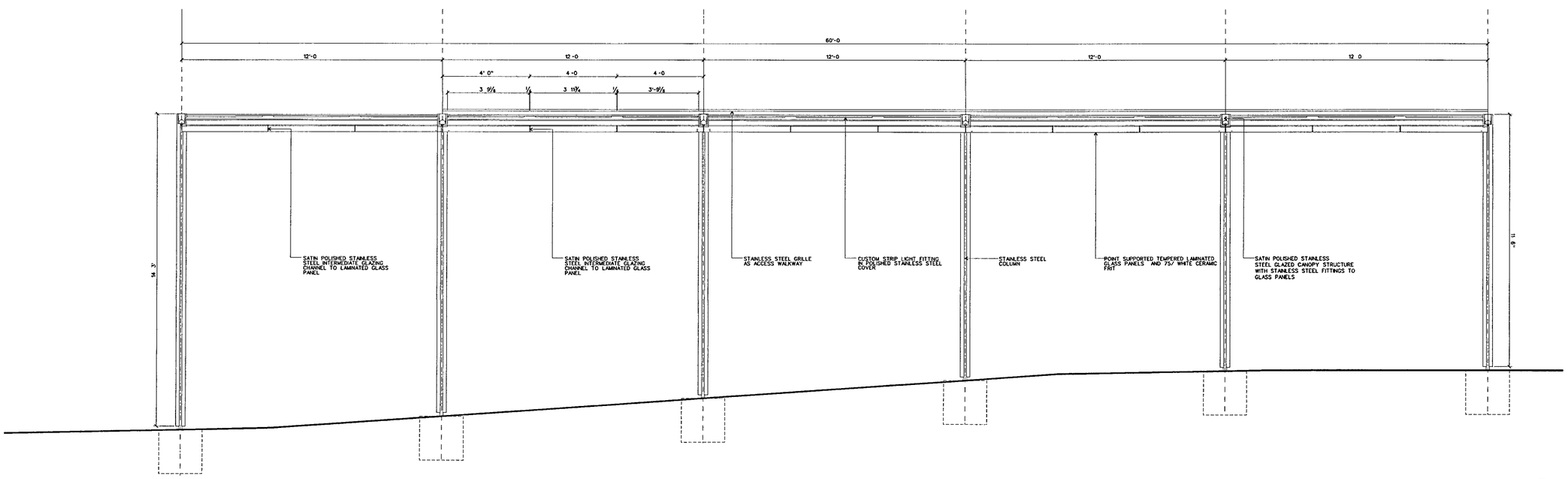

ENTRANCE CANOPY: SOUTH ELEVATION

SCALE 1/2" = 1'-0

B-CANOPY-SECT 10

WILLIAM J CLINTON PRESIDENTIAL CENTER

LITTLE ROCK, ARKANSAS

Architect

POLSHEK PARTNERSHIP LLP
320 West 13th Street
New York, New York 10014
212 807 7171

Coordinating Architects

POLK STANLEY YEARY ARCHITECTS Ltd
700 South Schiller Street
Little Rock Arkansas 72201
501 378 0878

WITSELL EVANS RASCO
901 West Third Street
Little Rock, Arkansas 72201
501 374 5300

WOODS CARADINE ARCHITECTS
2200 South Main Street
Little Rock, Arkansas 72205
501 374 4060

Landscape Architects

HARGREAVES ASSOCIATES
118 Magazine Street
Cambridge Massachusettes 02139
617 661 0070

LANDSCAPE ARCHITECTURE, Inc.
2300 Cottondale Lane Suite 202
Little Rock Arkansas 72202
501 374 5610

Structural Engineer

LESLIE E. ROBERTSON ASSOC RLLP
30 Broad Street, 47th Floor
New York, New York 10004
212 750 9000

MEP Engineers

FLACK + KURTZ Inc.
475 Fifth Avenue
New York, New York 10017
212 532 9600

CROMWELL ARCHITECTS ENGINEERS
101 South Spring Street
Little Rock, Arkansas 72201
501 372.2900

Curtainwall Consultant

R. A. HEINTGES ARCHITECTS
126 Fifth Avenue, 9th Floor
New York, New York 10011
212 852-2968

Seal

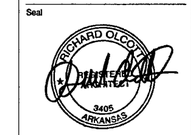

Issue	Date
100% Construction Documents	09/27/02
90% Progress Printing	08/30/02
100% Struct./ CD Progress	07/01/02
100% Design Development	03/01/02

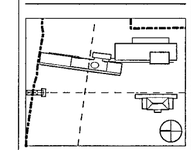

Job No
9908

Scale
1/2" = 1'-0"

Date
September 27, 2002

Title

ENTRANCE CANOPY, PLAN AND ELEVATION

Sheet No

A348

FOR OFFICIAL USE ONLY

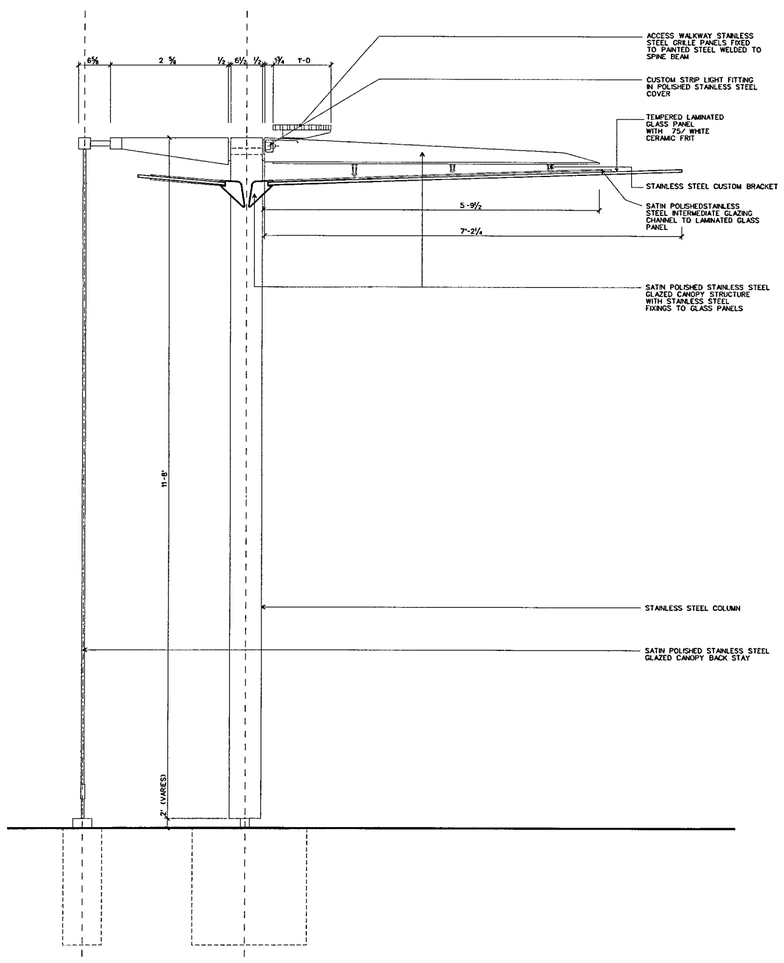

ENTRANCE CANOPY: TYPICAL SECTION

SCALE 1 = 1-0 B-CANOPY-SECT 11

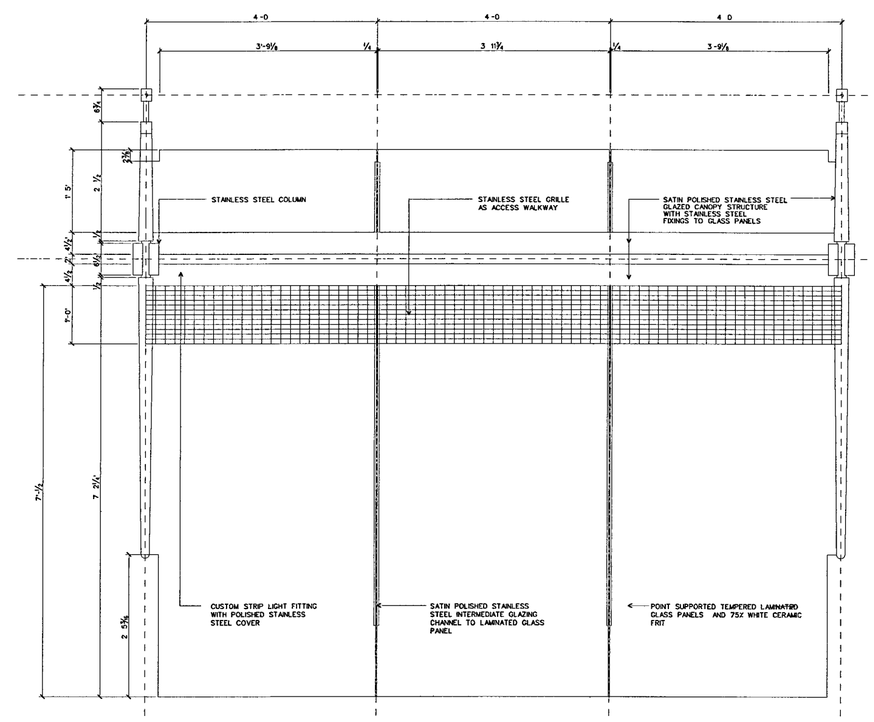

ENTRANCE CANOPY TYPICAL CANOPY BAY PLAN

SCALE 1 = 1-0 B-CANOPY-SECT 10

WILLIAM J CLINTON PRESIDENTIAL CENTER

LITTLE ROCK, ARKANSAS

Architect

POLSHEK PARTNERSHIP LLP
320 West 13th Street
New York New York 10014
212.807 7171

Coordinating Architects

POLK STANLEY YEARY ARCHITECTS Ltd
700 South Schiller Street
Little Rock, Arkansas 72201
501 378 0878

WITSELL EVANS RASCO
901 West Third Street
Little Rock Arkansas 72201
501 374 5300

WOODS CARADINE ARCHITECTS
2200 South Main Street
Little Rock, Arkansas 72206
501 374 4060

Landscape Architects

HARGREAVES ASSOCIATES
118 Magazine Street
Cambridge Massachusettes 02139
617 661 0070

LANDSCAPE ARCHITECTURE Inc.
2300 Cottondale Lane Suite 202
Little Rock, Arkansas 72202
501 374 5610

Structural Engineer

LESLIE E. ROBERTSON ASSOC., RLLP
30 Broad Street, 47th Floor
New York, New York 10004
212 750 9000

MEP Engineers

FLACK + KURTZ Inc
475 Fifth Avenue
New York, New York 10017
212.532 9600

CROMWELL ARCHITECTS ENGINEERS
101 South Spring Street
Little Rock, Arkansas 72201
501 372.2900

Curtainwall Consultant

R A. HEINTGES ARCHITECTS
126 Fifth Avenue, 9th Floor
New York, New York 10011
212.652-2966

Seal

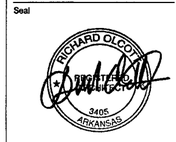

Issue	Date
100% Construction Documents	09/27/02
90% Progress Printing	08/30/02
100% Struct./ CD Progress	07/01/02
100% Design Development	03/01/02

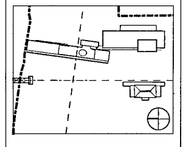

Job No 9908

Scale 1" = 1-0"

Date September 27, 2002

Title

ENTRANCE CANOPY, SECTION

Sheet No.

A349

FOR OFFICIAL USE ONLY

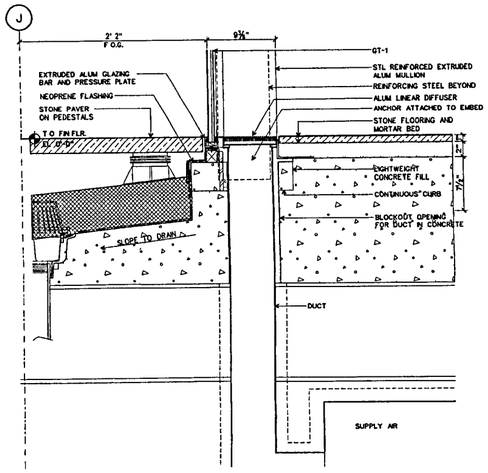

WALL SYSTEM A1: BASE SECT DETAIL AT LOBBY (33)
SCALE 1½" = 1'-0" D-CWA01

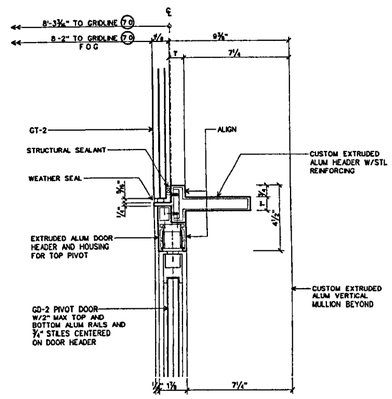

WALL SYSTEM A1: DETAIL SECTION OF CAFE DOOR HEADER (32)
SCALE 3" = 1'-0" D CWA01

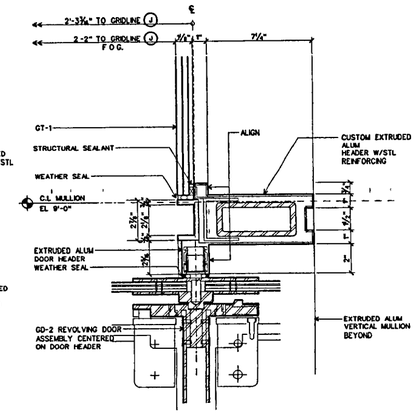

WALL SYSTEM A1: DETAIL SECTION AT LOBBY REVOLVING DOOR HEADER (31A)
SCALE 3" = 1'-0" D-CWA01

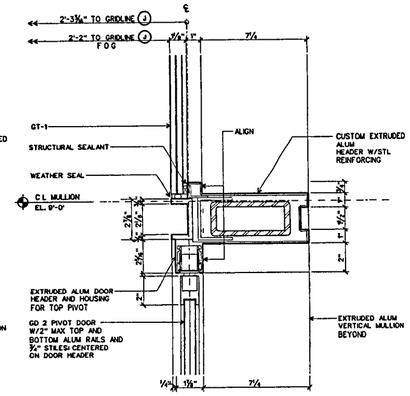

WALL SYSTEM A1: DETAIL SECTION AT LOBBY PIVOT DOOR HEADER (31)
SCALE: 3" = 1'-0" D-CWA01

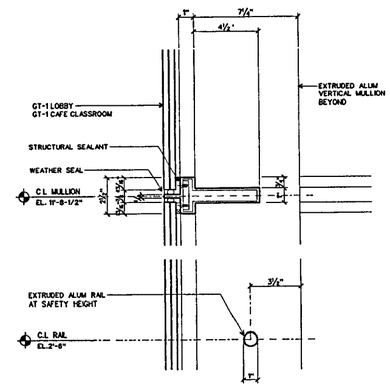

WALL SYSTEM A1: DETAIL SECTION OF HORIZONTAL (30)
SCALE 3" = 1'-0" D-CWA01

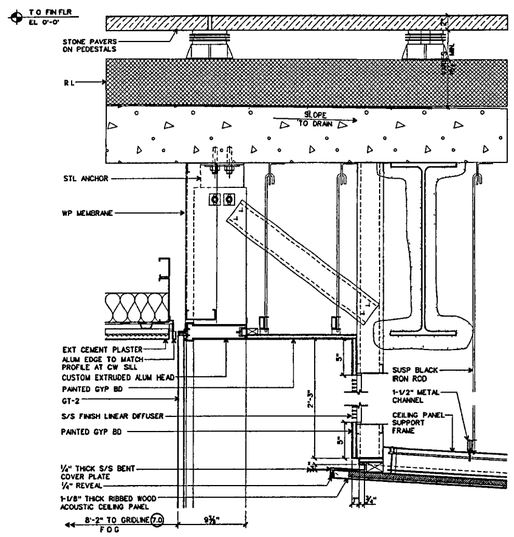

WALL SYSTEM A1: SECTION OF CAFE HEAD (23)
SCALE 1-1/2" = 1'-0" D-CWA01

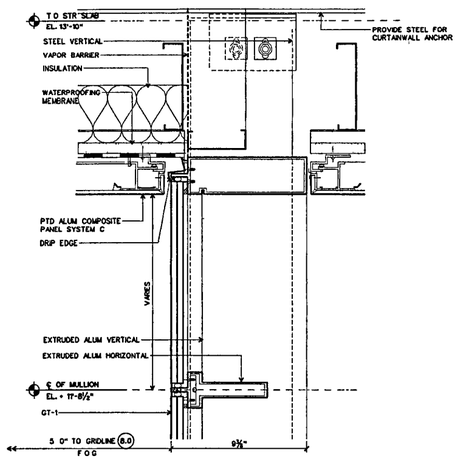

WALL SYSTEM A1: DETAIL SECTION AT SLOPED UNDERSIDE OF BELLY (22)
SCALE 1-1/2" = 1'-0" D-CWA01

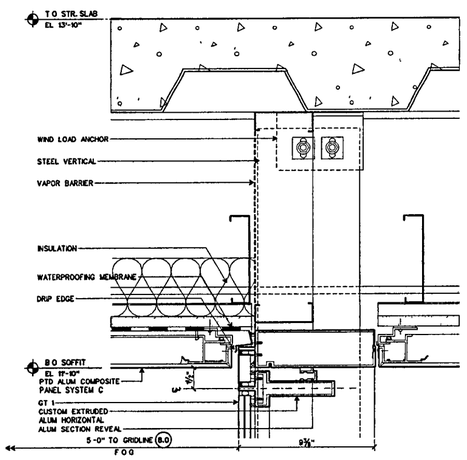

WALL SYSTEM A1: DETAIL SECTION OF HORIZONTAL MULLION UNDER BELLY (21)
SCALE 3" = 1'-0" D-CWA01

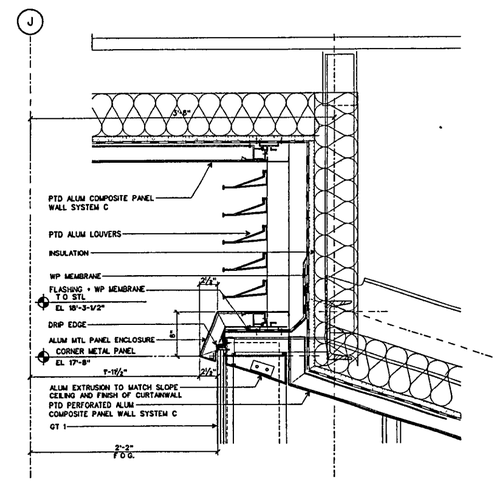

WALL SYSTEM A1: TYP HEAD SECTION DETAIL (20)
SCALE 1-1/2" = 1'-0" D-CWA01

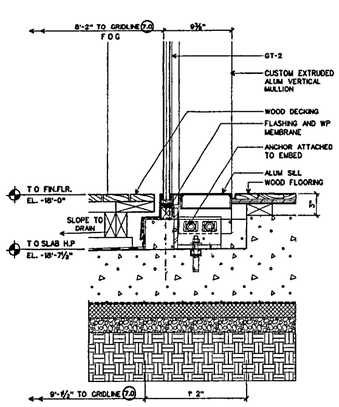

WALL SYSTEM A1: BASE DETAIL AT CAFE (12)
SCALE 1-1/2" = 1'-0" D-CWA01

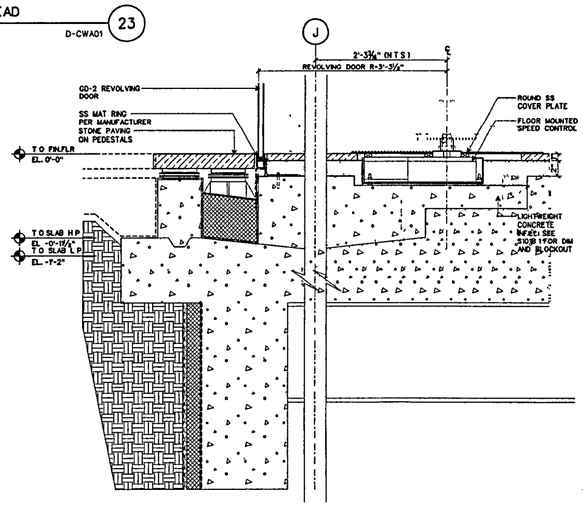

WALL SYSTEM A1: BASE DETAIL AT LOBBY REVOLVING DOOR (11A)
SCALE 1-1/2" = 1'-0" D-CWA01

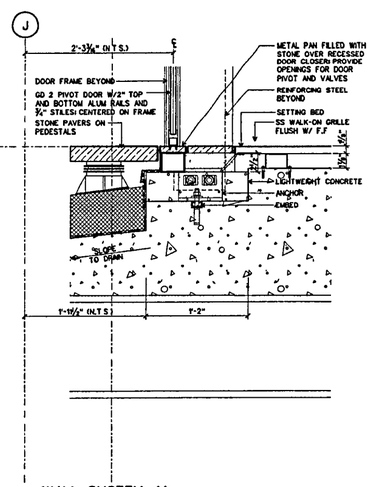

WALL SYSTEM A1: BASE DETAIL AT LOBBY PIVOT DOOR (11)
SCALE: 1-1/2" = 1'-0" D-CWA01

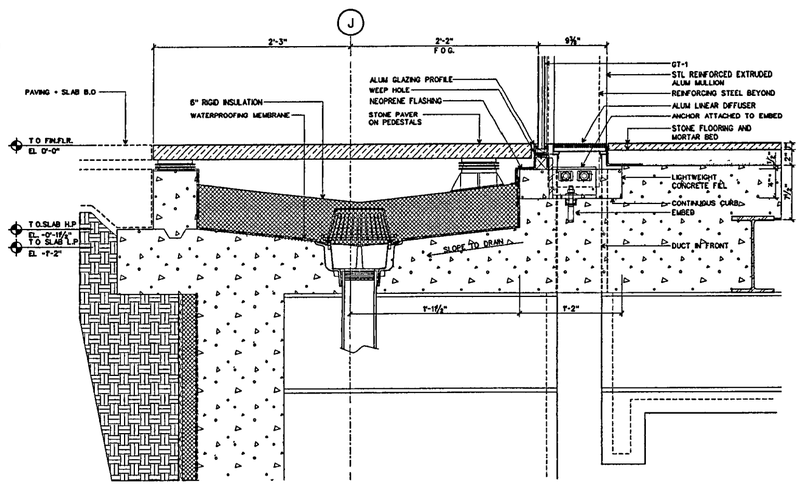

WALL SYSTEM A1: BASE SECT DETAIL AT LOBBY, TYP (10)
SCALE 1-1/2" = 1'-0" D-CWA01

WILLIAM J. CLINTON PRESIDENTIAL CENTER

LITTLE ROCK, ARKANSAS

Architect
POLSHEK PARTNERSHIP LLP
320 West 13th Street
New York, New York 10014
212 807 7171

Coordinating Architects
POLK STANLEY YEARY ARCHITECTS Ltd
700 South Schiller Street
Little Rock, Arkansas 72201
501 378 0878

WITBELL EVANS RASCO
901 West Third Street
Little Rock, Arkansas 72201
501 374 6300

WOODS CARADINE ARCHITECTS
2200 South Main Street
Little Rock, Arkansas 72206
501 374 4060

Landscape Architects
HARGREAVES ASSOCIATES
116 Magazine Street
Cambridge, Massachusetts 02139
617 661 0070

LANDSCAPE ARCHITECTURE, Inc.
2300 Cottondale Lane Suite 202
Little Rock, Arkansas 72202
501 374 5810

Structural Engineer
LESLIE E. ROBERTSON ASSOC., RLLP
30 Broad Street, 47th Floor
New York, New York 10004
212 750 9000

MEP Engineers
FLACK + KURTZ Inc.
475 Fifth Avenue
New York, New York 10017
212 532 9600

CROMWELL ARCHITECTS ENGINEERS
101 South Spring Street
Little Rock, Arkansas 72201
501 372.2900

Curtainwall Consultant
R. A. HEINTGES ARCHITECTS
129 Fifth Avenue, 9th Floor
New York, New York 10011
212 652-2968

Seal

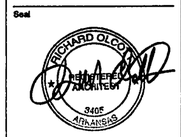

Issue	Date
100% Construction Documents	09/27/02
90% Progress Printing	08/30/02
100% Struct./ CD Progress	07/01/02
Bridge Bldg Substructure	06/14/02
100% Design Development	03/01/02

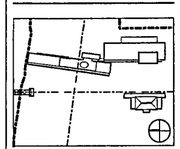

Job No. 9906

Scale AS NOTED

Date September 27, 2002

Title
WALL SYSTEMS A1: SECTION DETAILS

Sheet No
A355

FOR OFFICIAL USE ONLY

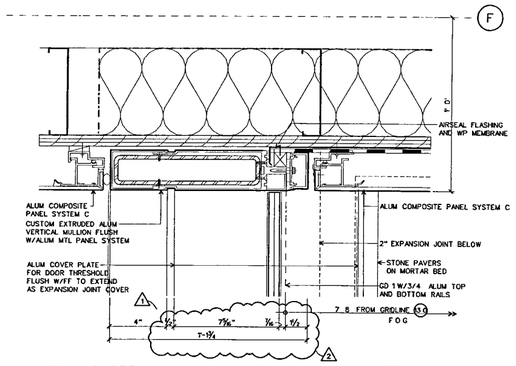

WALL SYSTEM A2· END MULLION AT SOUTH LOBBY 43

SCALE 3 " = 1-0" D-CWA02

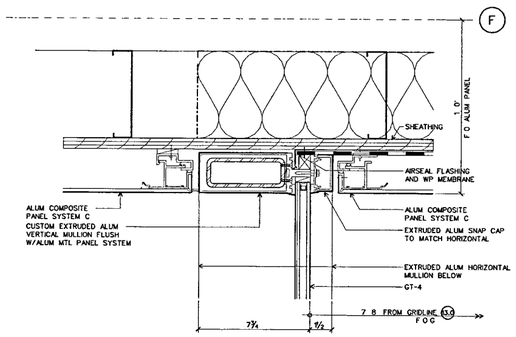

WALL SYSTEM A2 VERTICAL AT UPPER LEVELS 42

SCALE 3 ' = 1'-0 D-CWA02

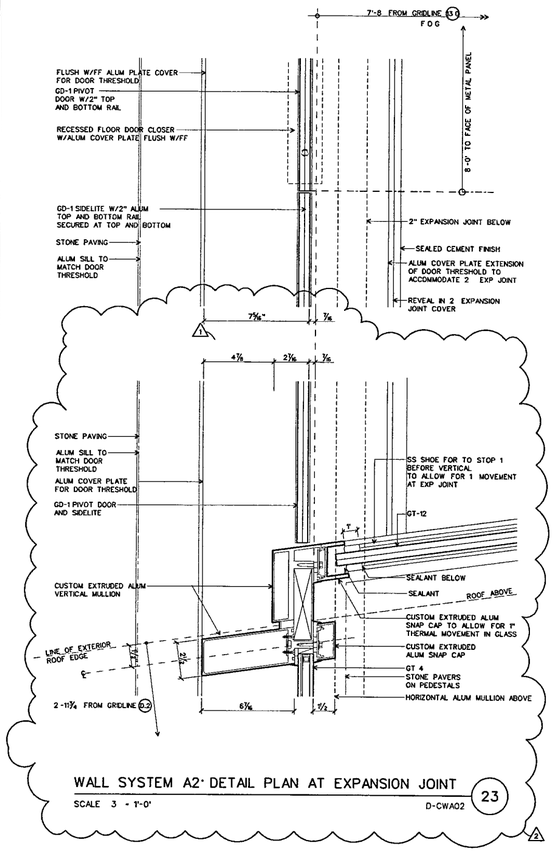

WALL SYSTEM A2· DETAIL PLAN AT EXPANSION JOINT 23

SCALE 3 " = 1'-0" D-CWA02

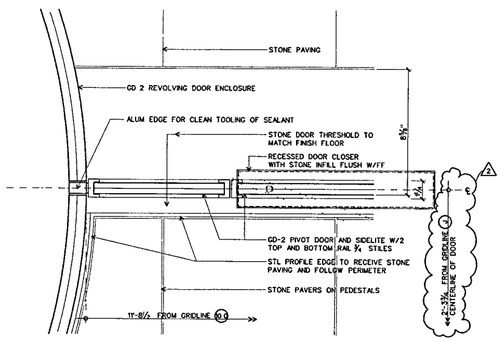

WALL SYSTEM A1· DETAIL PLAN AT REVOLVING DOOR 22

SCALE 3 = 1'-0" D-CWA02

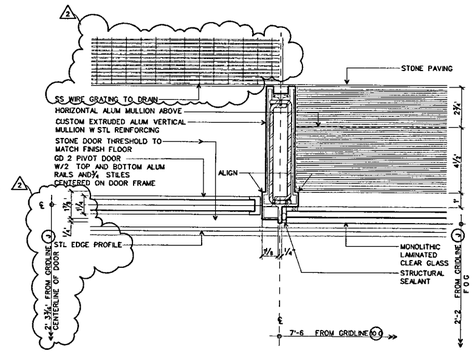

WALL SYSTEM A1: DETAIL PLAN AT LOBBY DOOR 21

SCALE 3 " = 1'-0" D-CWA02

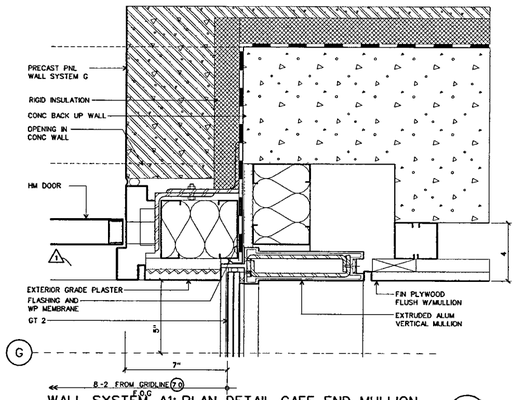

WALL SYSTEM A1· PLAN DETAIL CAFE END MULLION 30

SCALE 3 ' = 1'-0" D-CWA02

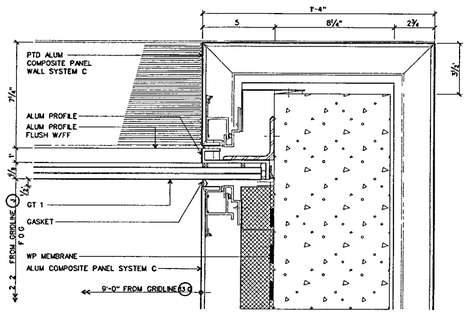

WALL SYSTEM A1 DETAIL PLAN AT ESCALATOR WALL 20

SCALE 3 " = 1'-0" D-CWA02

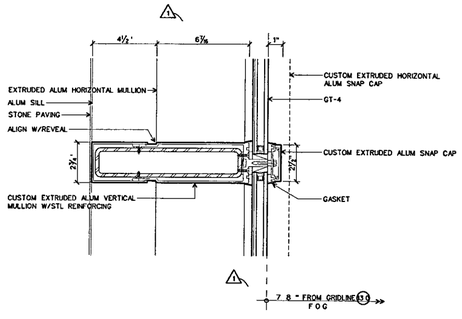

WALL SYSTEM A2: DETAIL PLAN VERTICAL MULLION 13

SCALE 3 = 1'-0" D-CWA02

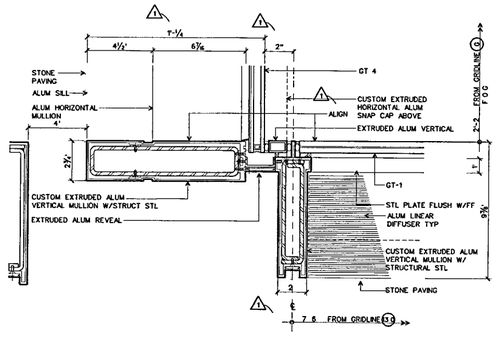

WALL SYSTEM A1· CORNER INTERSECTION W/A2 SYSTEM 12

SCALE 3 = 1'-0 D-CWA02

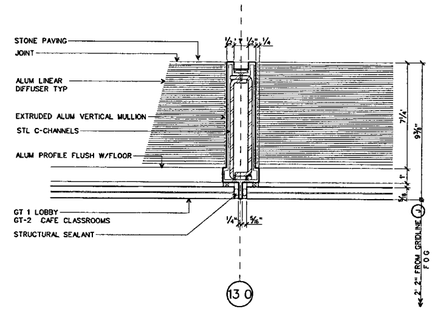

WALL SYSTEM A1: PLAN DETAIL MULLION, TYP 11

SCALE 3 " = 1-0 D-CWA02

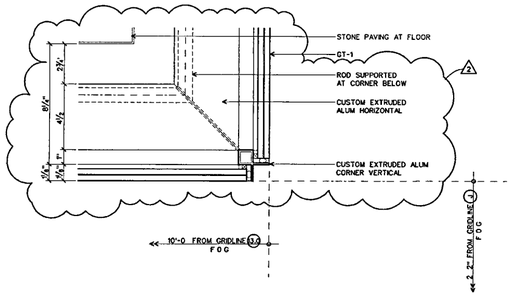

WALL SYSTEM A1· DETAIL PLAN CORNER, TYP 10

SCALE 3 = 1-0 D-CWA02

WILLIAM J CLINTON PRESIDENTIAL CENTER

LITTLE ROCK, ARKANSAS

Architect

POLSHEK PARTNERSHIP LLP
320 West 13th Street
New York, New York 10014
212 807 7171

Coordinating Architects

POLK STANLEY YEARY ARCHITECTS Ltd
700 South Schiller Street
Little Rock, Arkansas 72201
501.378 0878

WITSELL EVANS RASCO
901 West Third Street
Little Rock Arkansas 72201
501 374 5300

WOODS CARADINE ARCHITECTS
2200 South Main Street
Little Rock, Arkansas 72206
501 374 4060

Landscape Architects

HARGREAVES ASSOCIATES
118 Magazine Street
Cambridge, Massachusettas 02139
617.661 0070

LANDSCAPE ARCHITECTURE, Inc
2300 Cottondale Lane Suite 202
Little Rock, Arkansas 72202
501 374 5610

Structural Engineer

LESLIE E ROBERTSON ASSOC , RLLP
30 Broad Street, 47th Floor
New York, New York 10004
212 750 9000

MEP Engineers

FLACK + KURTZ Inc.
475 Fifth Avenue
New York, New York 10017
212 532 9600

CROMWELL ARCHITECTS ENGINEERS
101 South Spring Street
Little Rock, Arkansas 72201
501 372 2900

Curtainwall Consultant

R A. HEINTGES ARCHITECTS
126 Fifth Avenue, 9th Floor
New York, New York 10011
212 652-2966

Seal

RICHARD OLCOTT HEINTGES ARCHITECT 3405 ARKANSAS

Issue	Date
2 100% Construction Documents	09/27/02
1 90% Progress Printing	08/30/02
100% Struct./ CD Progress	07/01/02
Bridge Bldg Substructure	06/14/02
100% Design Development	03/01/02

Job No 9908

Scale 3" = 1'-0"

Date September 27, 2002

Title WALL SYSTEM A1 AND SYSTEM A2 PLAN DETAILS

Sheet No A356

FOR OFFICIAL USE ONLY

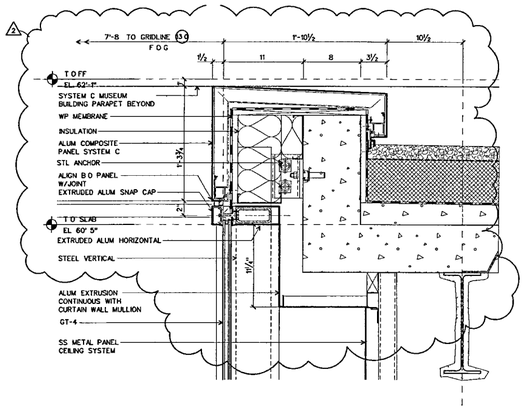

WALL SYSTEM A2: DETAIL SECTION AT SOUTH PARAPET (33)

SCALE 1-1/2 = 1'-0" D-CWA03

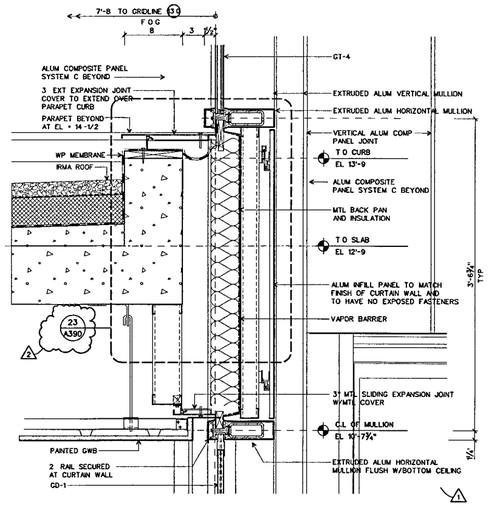

WALL SYSTEM A2: DETAIL SECTION AT SOUTH NECK (22)

SCALE 1-1/2 " = 1'-0" D-CWA03

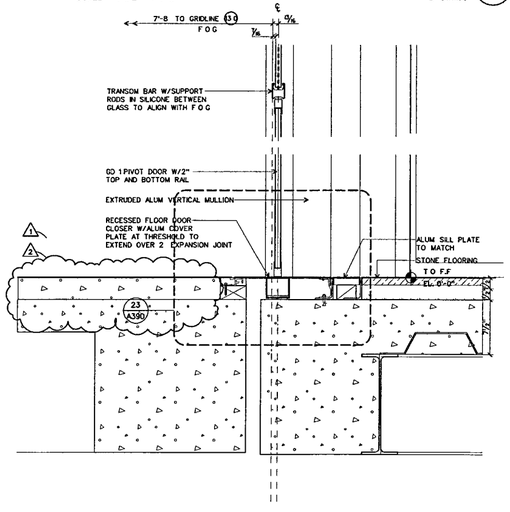

WALL SYSTEM A2: DETAIL SECTION AT SOUTH DOORS AND EXPANSION JOINT (12)

SCALE 1-1/2 " = 1'-0" D-CWA03

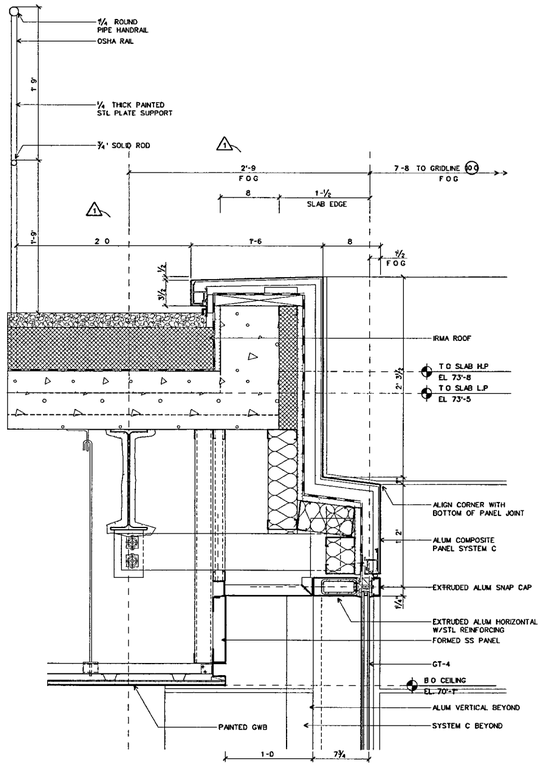

WALL SYSTEM A2: DETAIL SECTION OF PARAPET, TYP (21)

SCALE 1-1/2 " = 1'-0" D-CWA03

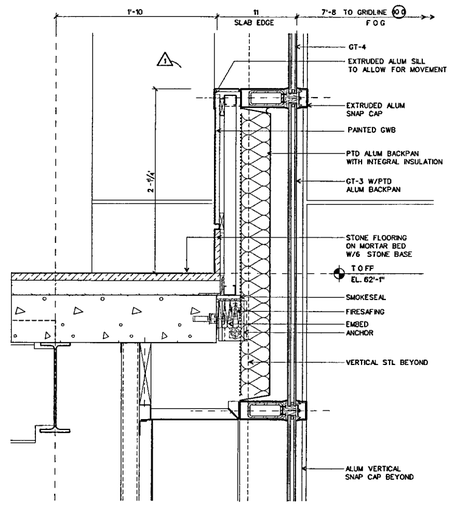

WALL SYSTEM A2: DETAIL SECTION AT EXEC LEVEL (11)

SCALE 1-1/2 = 1-0 D-CWA03

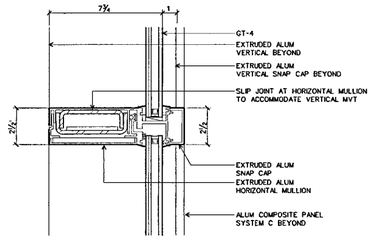

WALL SYSTEM A2: DETAIL OF HORIZONTAL STACK JOINT (40)

SCALE 3 " = 1'-0" D-CWA03

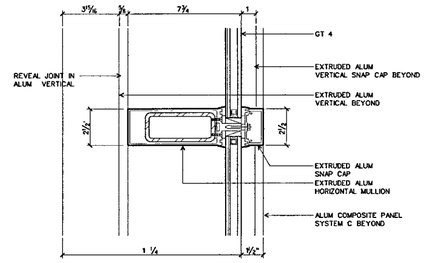

WALL SYSTEM A2: DETAIL OF HORIZONTAL (30)

SCALE 3 " = 1'-0" D-CWA03

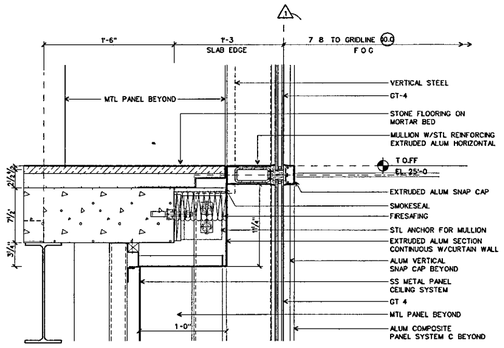

WALL SYSTEM A2: DETAIL SECTION AT SLAB EDGE (20)

SCALE 1-1/2 = 1-0 D-CWA03

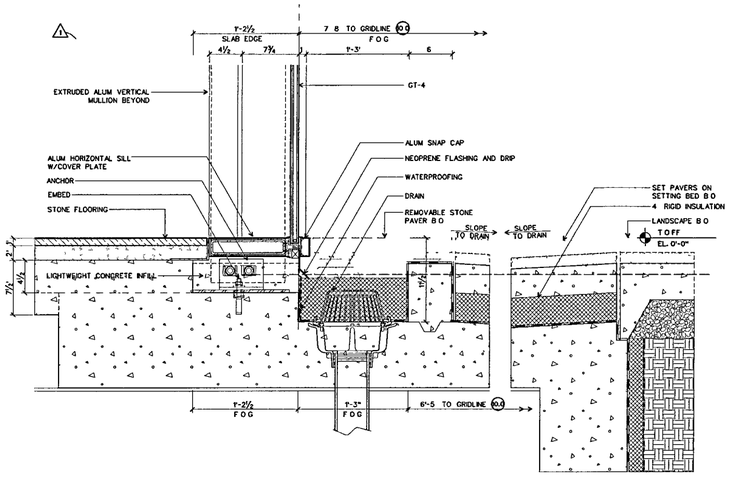

WALL SYSTEM A2: DETAIL SECTION AT GROUND FLOOR (10)

SCALE 1-1/2 = 1-0 D-CWA03

WILLIAM J CLINTON PRESIDENTIAL CENTER

LITTLE ROCK, ARKANSAS

Architect

POLSHEK PARTNERSHIP LLP
320 West 13th Street
New York New York 10014
212 807 7171

Coordinating Architects

POLK STANLEY YEARY ARCHITECTS Ltd
700 South Schiller Street
Little Rock Arkansas 72201
501 378 0878

WITSELL EVANS RASCO
901 West Third Street
Little Rock, Arkansas 72201
501 374 5300

WOODS CARADINE ARCHITECTS
2200 South Main Street
Little Rock, Arkansas 72206
501 374 4050

Landscape Architects

HARGREAVES ASSOCIATES
118 Magazine Street
Cambridge Massachusettes 02139
617 661 0070

LANDSCAPE ARCHITECTURE, Inc.
2300 Cottondale Lane Suite 202
Little Rock, Arkansas 72202
501 374 5810

Structural Engineer

LESLIE E. ROBERTSON ASSOC RLLP
30 Broad Street, 47th Floor
New York New York 10004
212.750 9000

MEP Engineers

FLACK + KURTZ Inc.
475 Fifth Avenue
New York, New York 10017
212 532 9600

CROMWELL ARCHITECTS ENGINEERS
101 South Spring Street
Little Rock, Arkansas 72201
501 372.2900

Curtainwall Consultant

R A. HEINTGES ARCHITECTS
126 Fifth Avenue 9th Floor
New York New York 10011
212 652-2966

Seal

Issue	Date
100% Construction Documents	09/27/02
90% Progress Printing	08/30/02
100% Struct./ CD Progress	07/01/02
Bridge Bldg Substructure	06/14/02
100% Design Development	03/01/02

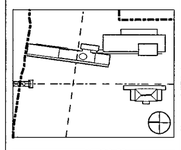

Job No 9908

Scale AS NOTED

Date September 27, 2002

Title

WALL SYSTEMS A2 SECTION DETAILS

Sheet No

A357

FOR OFFICIAL USE ONLY

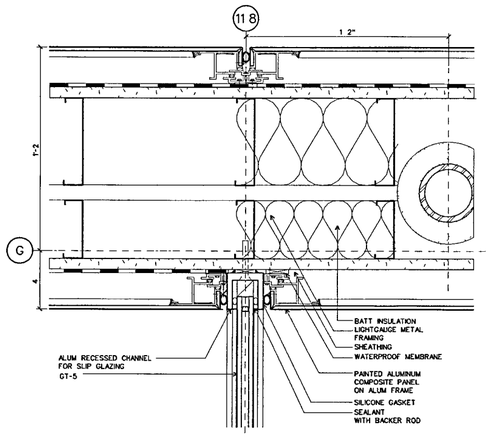

WALL SYSTEM A3 PLAN DETAIL AT END GLASS WALL (33)
SCALE 3" = 1'-0" D-CWA05

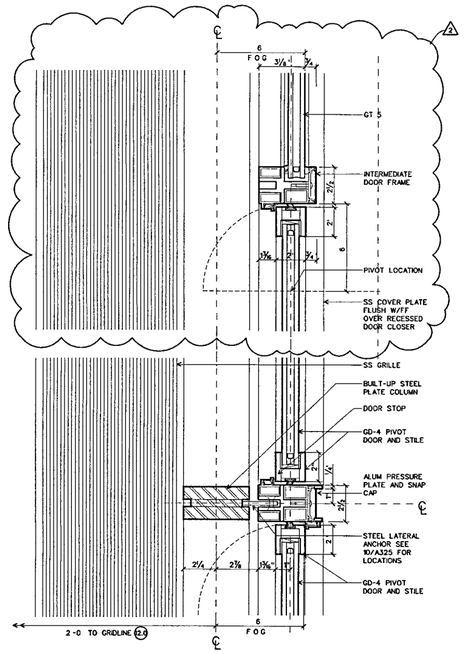

WALL SYSTEM A3: PLAN DETAIL AT PIVOT DR AND SIDELITE (32)
SCALE 3" = 1'-0" D-CWA05

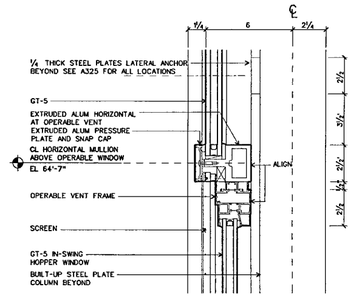

WALL SYSTEM A3 SECTION AT OPERABLE WINDOW (41)
SCALE 3 = 1-0 D-CWA05

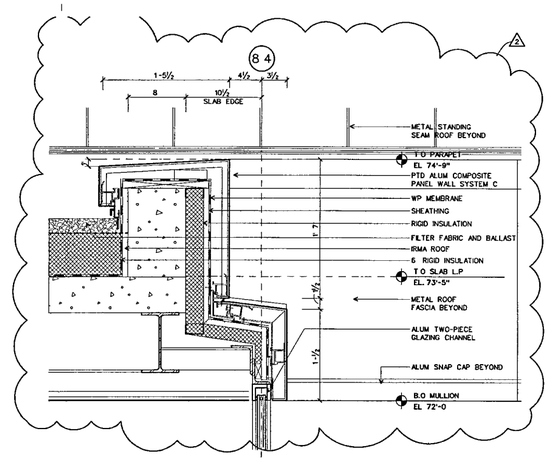

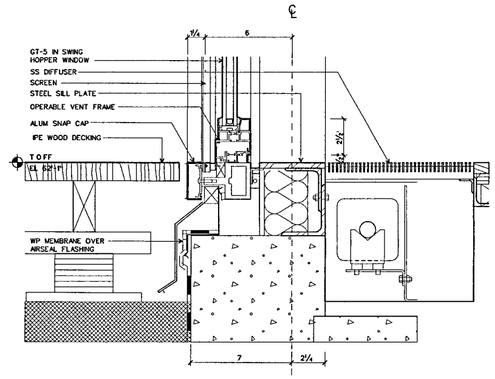

WALL SYSTEM A3: SECTION AT OPERABLE WINDOW (31)
SCALE 3 = 1-0 D-CWA05

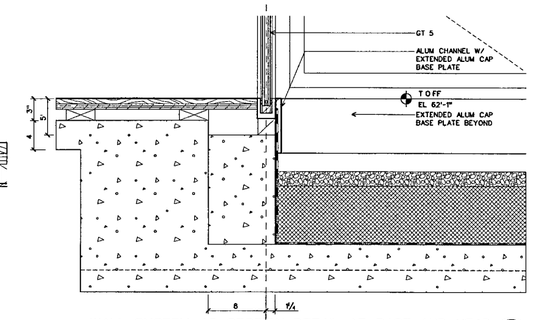

WALL SYSTEM A3: SECTION DETAIL AT BASE AND HEAD (30)
SCALE 1-1/2 = 1-0 D-CWA04

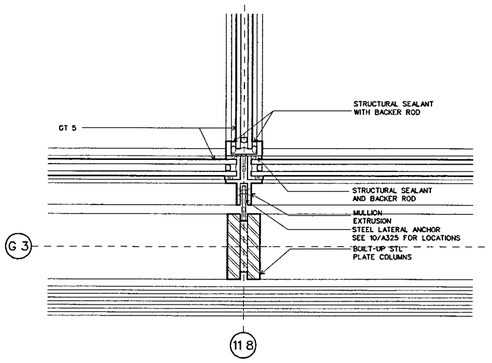

WALL SYSTEM A3: PLAN DETAIL AT END GLASS WALL (23)
SCALE 3" = 1-0 D-CWA05

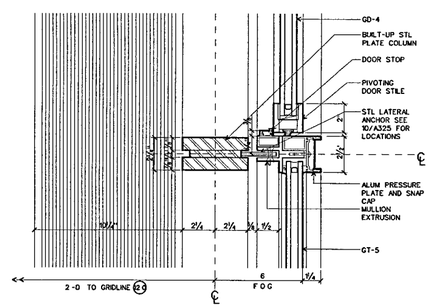

WALL SYSTEM A3: PLAN AT PIVOT DOOR (22)
SCALE 3" = 1'-0' D-CWA05

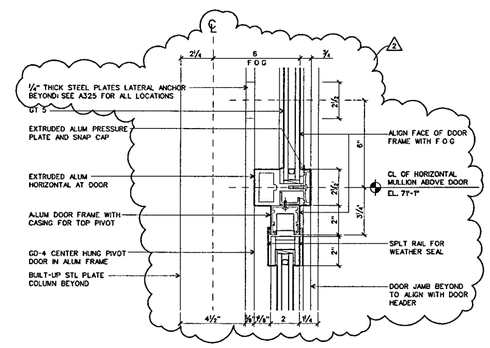

WALL SYSTEM A3: DETAIL AT PIVOT DOOR HEAD (21)
SCALE 3" = 1'-0" D-CWA04

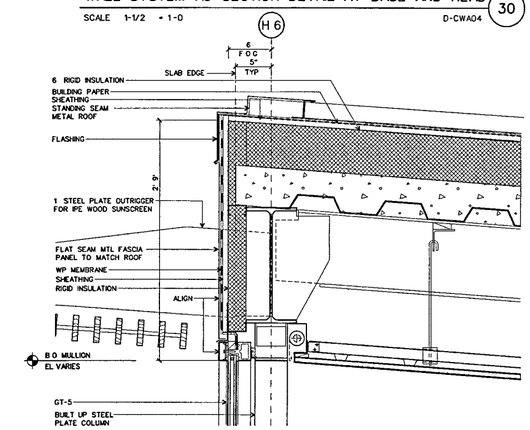

WALL SYSTEM A3: SECTION DETAIL AT HEAD TYP (20)
SCALE 1-1/2" = 1'-0' D-CWA04

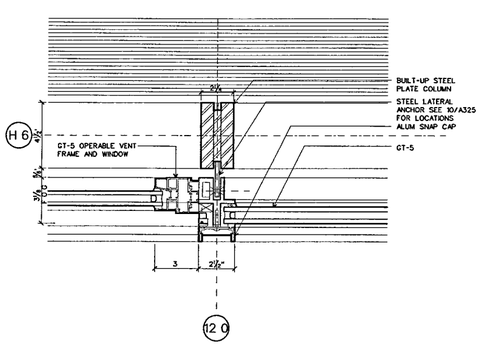

WALL SYSTEM A3: PLAN DETAIL TYP (13)
SCALE 3 = 1-0" D-CWA05

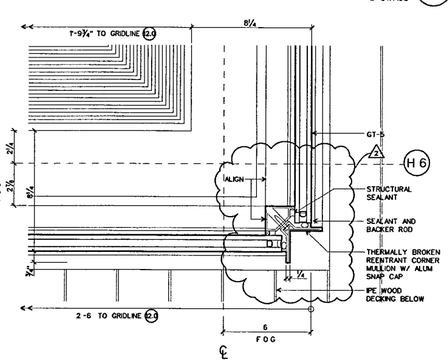

WALL SYSTEM A3: PLAN DETAIL AT TYP MULLION (12)
SCALE 3 = 1-0 D-CWA05

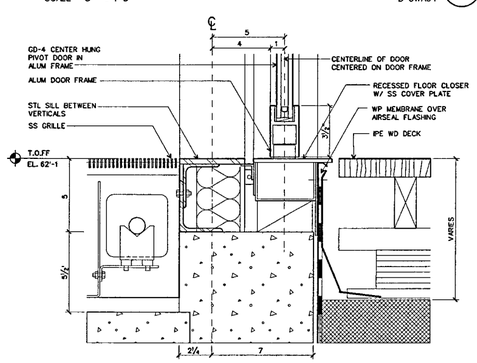

WALL SYSTEM A3: DETAIL AT PIVOT DOOR SILL (11)
SCALE 3 = 1-0 D-CWA04

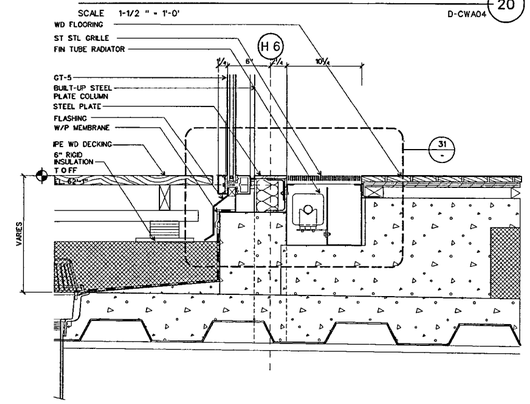

WALL SYSTEM A3: SECTION DETAIL AT TYP BASE (10)
SCALE 1-1/2" = 1'-0 D-CWA04

WILLIAM J CLINTON PRESIDENTIAL CENTER

LITTLE ROCK, ARKANSAS

Architect

POLSHEK PARTNERSHIP LLP
320 West 13th Street
New York, New York 10014
212 807 7171

Coordinating Architects

POLK STANLEY YEARY ARCHITECTS Ltd
700 South Schiller Street
Little Rock, Arkansas 72201
501 378 0878

WITSELL EVANS RASCO
901 West Third Street
Little Rock, Arkansas 72201
501 374 5300

WOODS CARADINE ARCHITECTS
2200 South Main Street
Little Rock Arkansas 72206
501 374 4060

Landscape Architects

HARGREAVES ASSOCIATES
118 Magazine Street
Cambridge Massachusettas 02139
617 661 0070

LANDSCAPE ARCHITECTURE, Inc.
2300 Cottondale Lane Suite 202
Little Rock, Arkansas 72202
501 374 5610

Structural Engineer

LESLIE E. ROBERTSON ASSOC RLLP
30 Broad Street, 47th Floor
New York, New York 10004
212.750 9000

MEP Engineers

FLACK + KURTZ Inc.
475 Fifth Avenue
New York, New York 10017
212 532.9600

CROMWELL ARCHITECTS ENGINEERS
101 South Spring Street
Little Rock, Arkansas 72201
501 372.2900

Curtainwall Consultant

R. A. HEINTGES ARCHITECTS
126 Fifth Avenue, 9th Floor
New York, New York 10011
212 652-2966

Seal

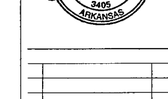

Issue	Date
1 100% Construction Documents	09/27/02
90% Progress Printing	08/30/02
100% Struct./ CD Progress	07/01/02
100% Design Development	03/01/02

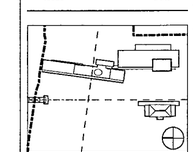

Job No 9908

Scale AS NOTED

Date September 27, 2002

Title WALL SYSTEM A3 SECTION AND PLAN DETAILS

Sheet No **A358**

FOR OFFICIAL USE ONLY

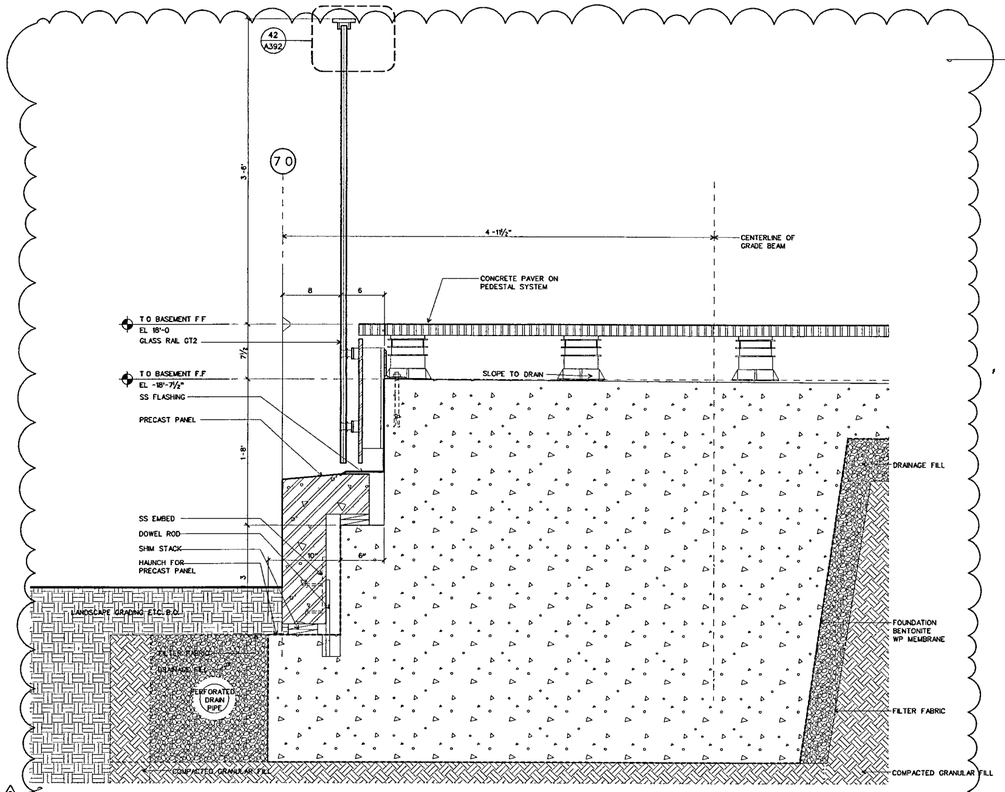

SECTION DETAIL AT CAFE TERRACE RAIL/PRECAST

SCALE 1-1/2 " = 1'-0" D-CWC01 22

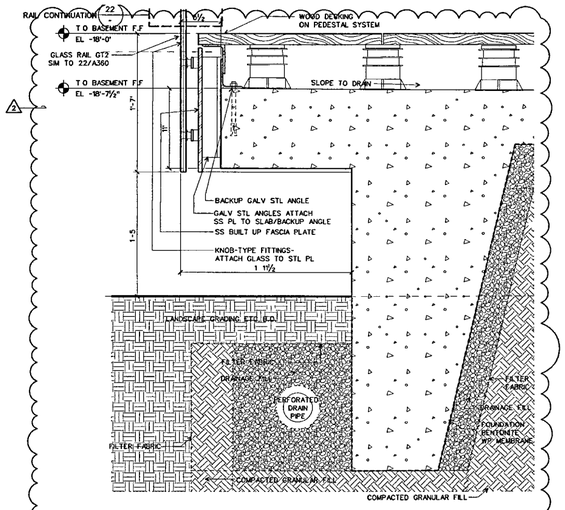

SECTION DETAIL AT CAFE TERRACE RAIL

SCALE 1-1/2 " = 1'-0" 30

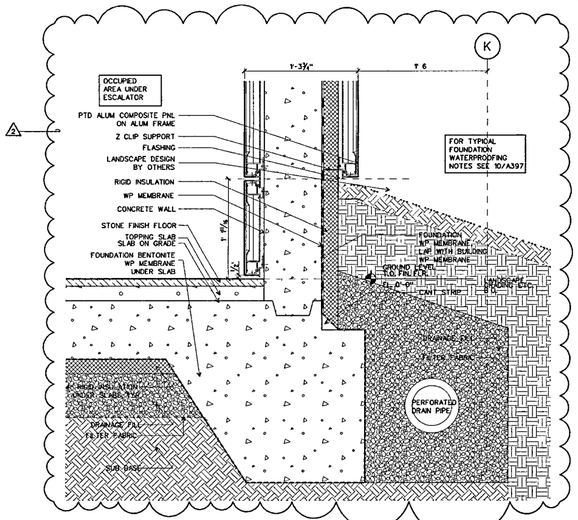

WALL SYSTEM C: DETAIL SECTION @ ESCALATOR BOX

SCALE 1-1/2 " = 1'-0" D-CWC01 21

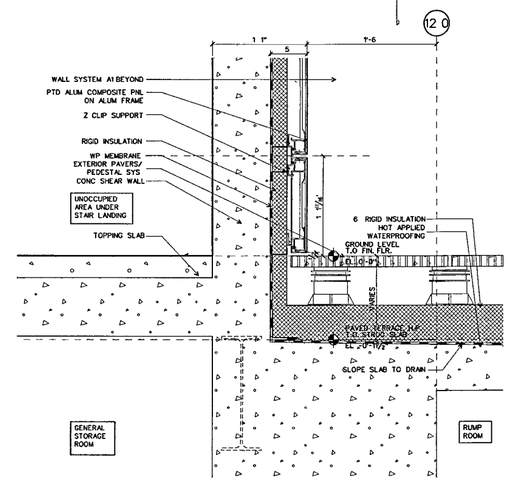

WALL SYSTEM C: DETAIL SECTION @ ESCALATOR BOX BASE (PLAZA)

SCALE 1-1/2 " = 1-0 D-CWC01 20

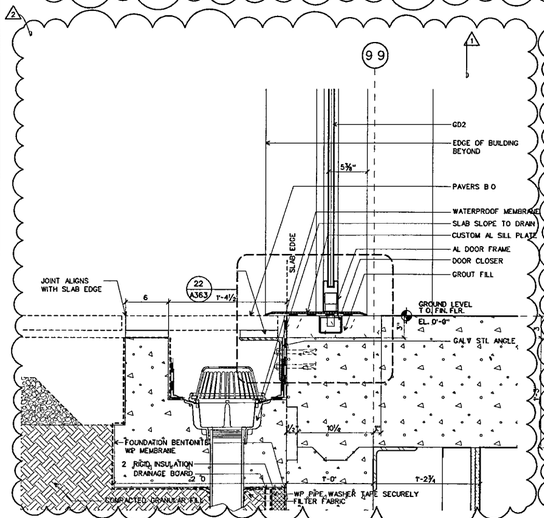

WALL SYSTEM C: DETAIL SECTION @ DOOR BASE

SCALE 1-1/2 " = 1'-0" D-CWC01 13

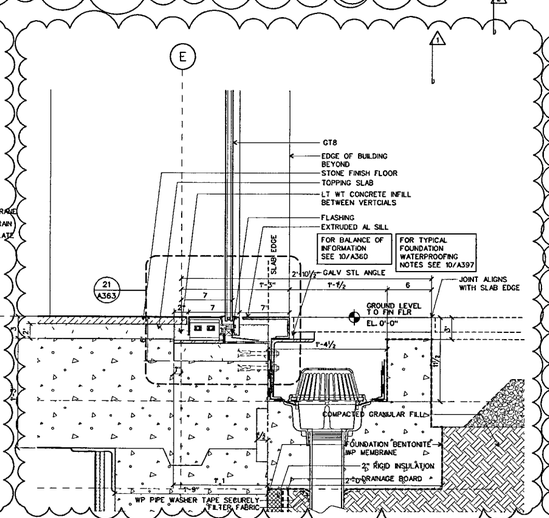

WALL SYSTEM C: DETAIL SECTION @ CORE GLAZING BASE

SCALE 1-1/2 " = 1-0 D-CWC01 12

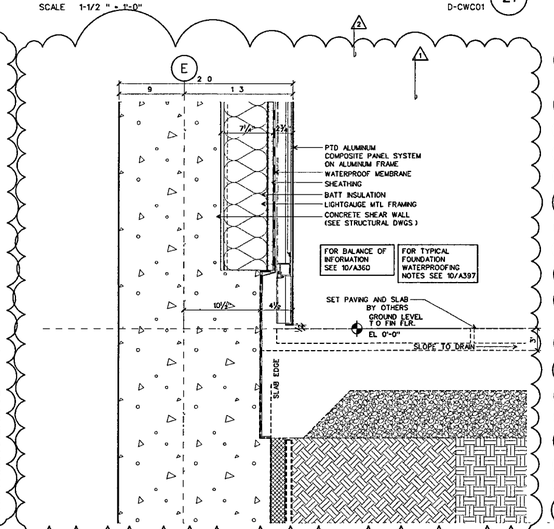

WALL SYSTEM C: DETAIL SECTION @ BASE SHEAR WALL

SCALE 1-1/2 " = 1-0 D-CWC01 11

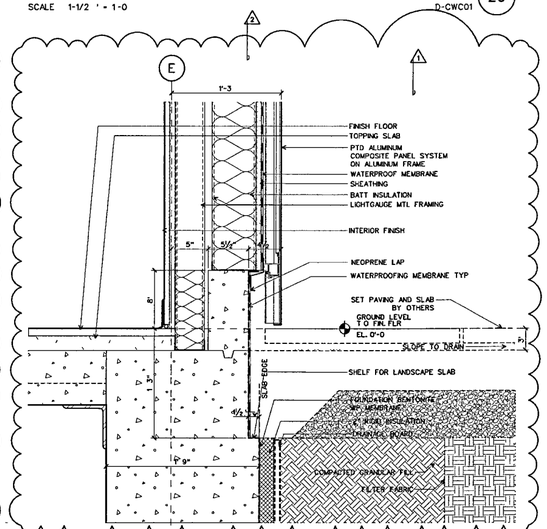

WALL SYSTEM C: TYP. DETAIL SECTION @ BASE

SCALE 1-1/2 " = 1-0 D-CWC01 10

WILLIAM J CLINTON PRESIDENTIAL CENTER

LITTLE ROCK, ARKANSAS

Architect

POLSHEK PARTNERSHIP LLP
320 West 13th Street
New York, New York 10014
212 807 7171

Coordinating Architects

POLK STANLEY YEARY ARCHITECTS Ltd
700 South Schiller Street
Little Rock Arkansas 72201
501 378 0878

WITSELL EVANS RASCO
901 West Third Street
Little Rock, Arkansas 72201
501 374 5300

WOODS CARADINE ARCHITECTS
2200 South Main Street
Little Rock Arkansas 72206
501 374 4060

Landscape Architects

HARGREAVES ASSOCIATES
118 Magazine Street
Cambridge Massachusettes 02139
617 661 0070

LANDSCAPE ARCHITECTURE, Inc.
2300 Cottondale Lane Suite 202
Little Rock, Arkansas 72202
501 374 5610

Structural Engineer

LESLIE E. ROBERTSON ASSOC , RLLP
30 Broad Street, 47th Floor
New York New York 10004
212 750 9000

MEP Engineers

FLACK + KURTZ Inc.
475 Fifth Avenue
New York, New York 10017
212 532 9600

CROMWELL ARCHITECTS ENGINEERS
101 South Spring Street
Little Rock, Arkansas 72201
501 372 2900

Curtainwall Consultant

R. A. HEINTGES ARCHITECTS
126 Fifth Avenue, 9th Floor
New York, New York 10011
212 652-2966

Seal

RICHARD OLOCK REGISTERED ARCHITECT 3405 ARKANSAS

Issue	Date
2 100% Construction Documents	09/27/02
1 90% Progress Printing	08/30/02
100% Struct/ CD Progress	07/01/02
Bridge Bldg Substructure	06/14/02
100% Design Development	03/01/02

Job No 9908

Scale 1-1/2" = 1'-0"

Date September 27, 2002

Title WALL SYSTEM C PLAZA AND BASE DETAIL SECTIONS

Sheet No A360

FOR OFFICIAL USE ONLY

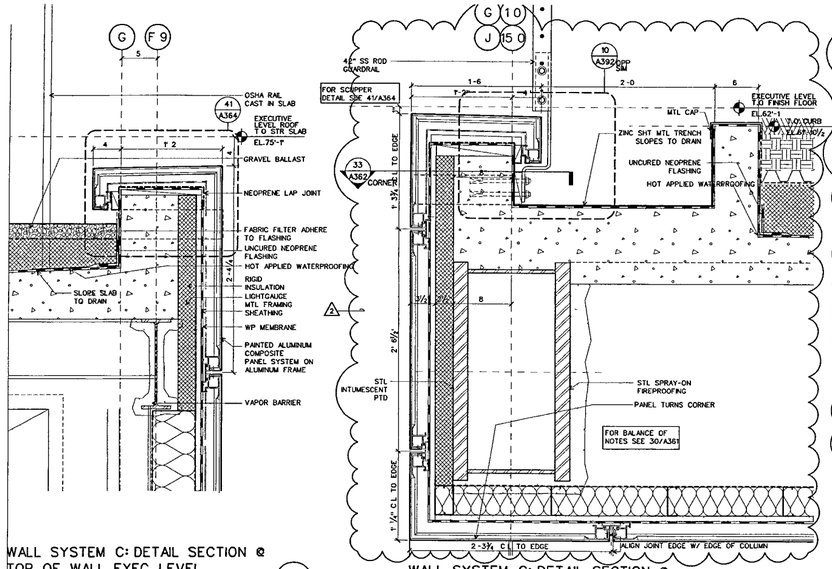

WALL SYSTEM C: DETAIL SECTION @ TOP OF WALL EXEC LEVEL (33)
SCALE 1-1/2 " = 1-0" D-CWC02

WALL SYSTEM C: DETAIL SECTION @ N & S ENDS OF BUILDING, UPPER EXTERIOR SOFFIT (32)
SCALE 1-1/2 " = 1-0" D-CWC02

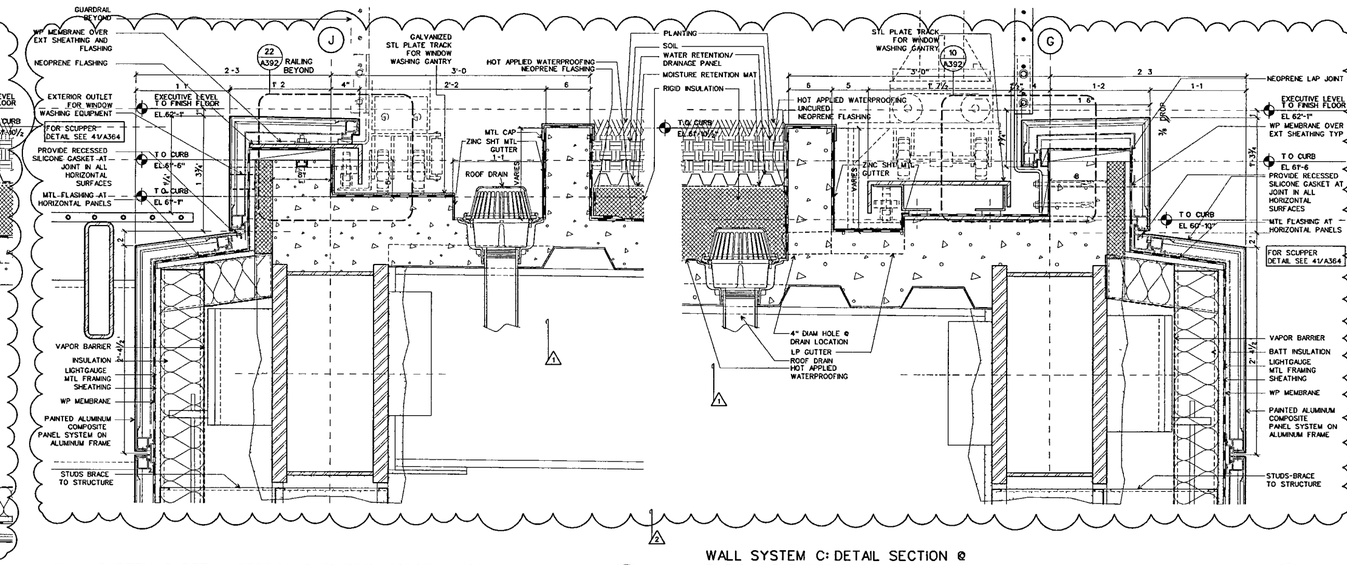

WALL SYSTEM C: DETAIL SECTION @ TYPICAL PARAPET EAST (31)
SCALE 1-1/2 " = 1-0" D-CWC02

WALL SYSTEM C: DETAIL SECTION @ TYPICAL PARAPET EAST (30)
SCALE 1-1/2 " = 1-0" D-CWC02

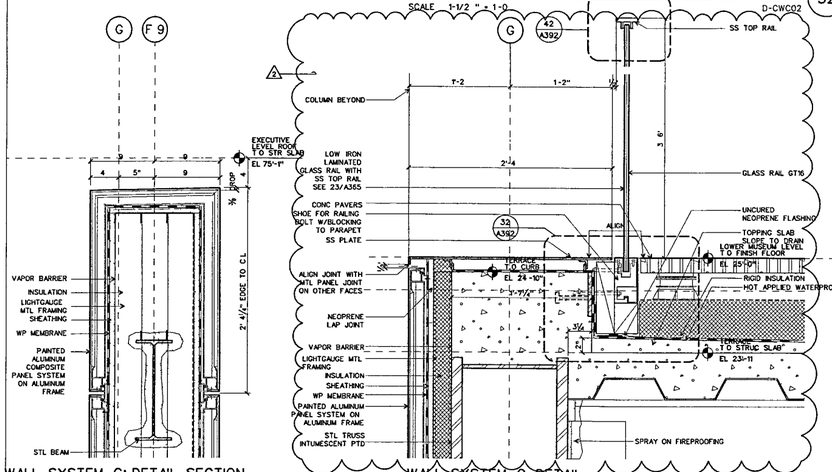

WALL SYSTEM C: DETAIL SECTION @ FREESTANDING WALL EXEC. LEVEL (23)
SCALE 1-1/2 " = 1'-0" D-CWC02

WALL SYSTEM C DETAIL SECTION @ BALCONY EDGE (22)
SCALE 1-1/2 " = 1'-0" D-CWC02

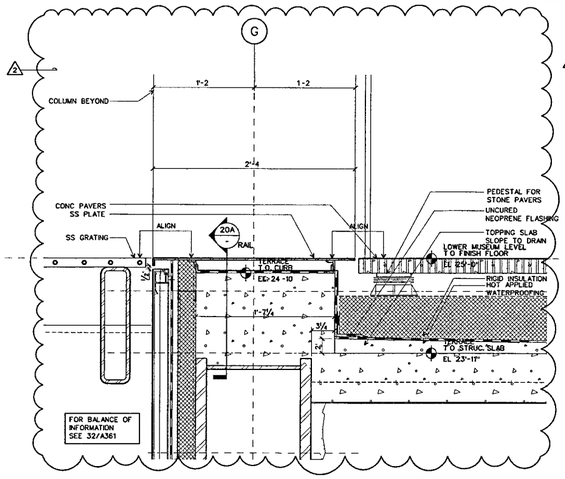

WALL SYSTEM C DETAIL SECTION @ BALCONY/GRATING (21)
SCALE 1-1/2 " = 1'-0" D-CWC02

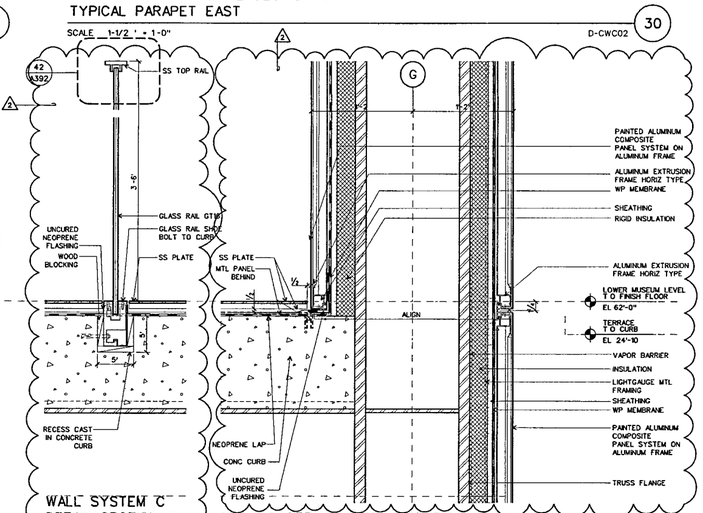

WALL SYSTEM C DETAIL SECTION @ RAIL-CURB (20A)
SCALE 1-1/2 " = 1'-0" D-CWC02

WALL SYSTEM C: DETAIL SECTION @ COLUMN-BALCONY INTERSECTION (20)
SCALE 1-1/2 " = 1'-0" D-CWC02

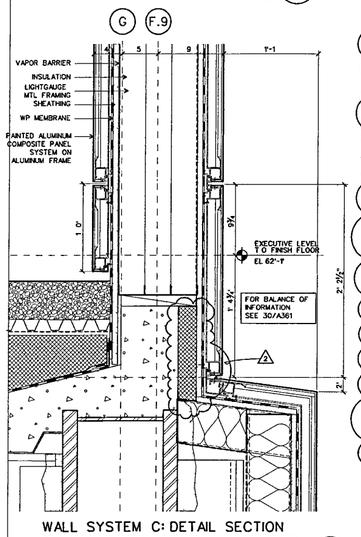

WALL SYSTEM C: DETAIL SECTION @ FREESTANDING WALL EXEC. LEVEL (13)
SCALE 1-1/2 " = 1-0" D-CWC02

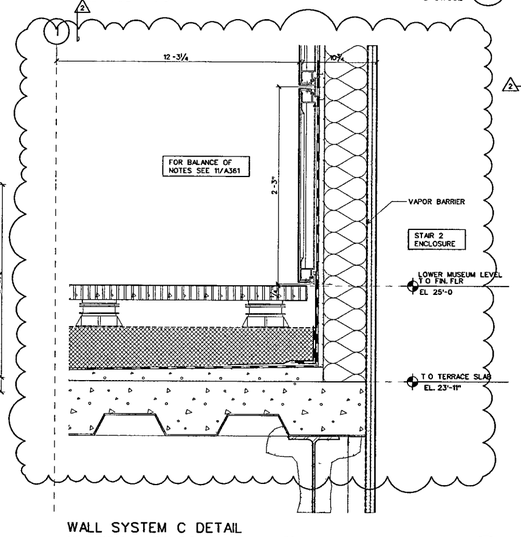

WALL SYSTEM C DETAIL SECTION @ BALCONY-WALL INTERSECTION (12)
SCALE 1-1/2 " = 1-0" D-CWC02

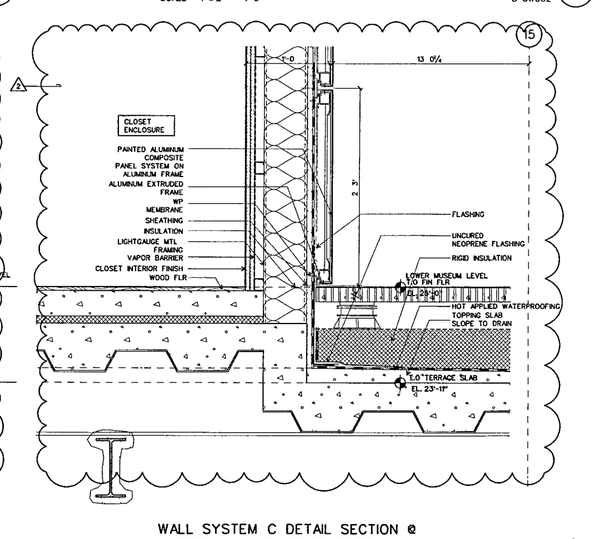

WALL SYSTEM C DETAIL SECTION @ ESCALATOR ENCLOSURE EDGE (11)
SCALE 1-1/2 " = 1-0" D-CWC02

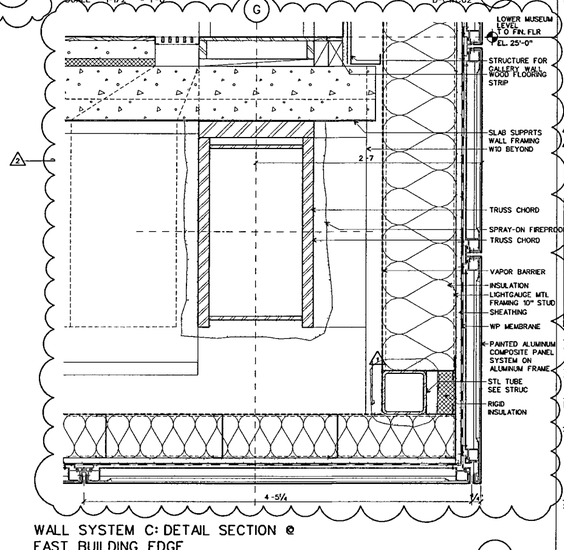

WALL SYSTEM C: DETAIL SECTION @ EAST BUILDING EDGE (10)
SCALE 1-1/2 " = 1-0" D-CWC02

WILLIAM J CLINTON PRESIDENTIAL CENTER

LITTLE ROCK, ARKANSAS

Architect
POLSHEK PARTNERSHIP LLP
320 West 13th Street
New York, New York 10014
212 807 7171

Coordinating Architects
POLK STANLEY YEARY ARCHITECTS Ltd
700 South Schiller Street
Little Rock Arkansas 72201
501 378 0878

WITSELL EVANS RASCO
901 West Third Street
Little Rock, Arkansas 72201
501 374 5300

WOODS CARADINE ARCHITECTS
2200 South Main Street
Little Rock, Arkansas 72206
501 374 4060

Landscape Architects
HARGREAVES ASSOCIATES
118 Magazine Street
Cambridge Massachusettes 02139
617 661 0070

LANDSCAPE ARCHITECTURE, Inc.
2300 Cottondale Lane Suite 202
Little Rock, Arkansas 72202
501 374 5610

Structural Engineer
LESLIE E. ROBERTSON ASSOC RLLP
30 Broad Street, 47th Floor
New York, New York 10004
212 750 9000

MEP Engineers
FLACK + KURTZ Inc
475 Fifth Avenue
New York, New York 10017
212.532.9600

CROMWELL ARCHITECTS ENGINEERS
101 South Spring Street
Little Rock, Arkansas 72201
501 372.2900

Curtainwall Consultant
R. A HEINTGES ARCHITECTS
126 Fifth Avenue, 9th Floor
New York, New York 10011
212 652-2966

Seal

Issue	Date
100% Construction Documents	09/27/02
90% Progress Printing	08/30/02
100% Struct./ CD Progress	07/01/02

Job No 9908
Scale 1 1/2" = 1-0"
Date September 27, 2002
Title WALL SYSTEM C DETAIL SECTIONS
Sheet No A361

FOR OFFICIAL USE ONLY

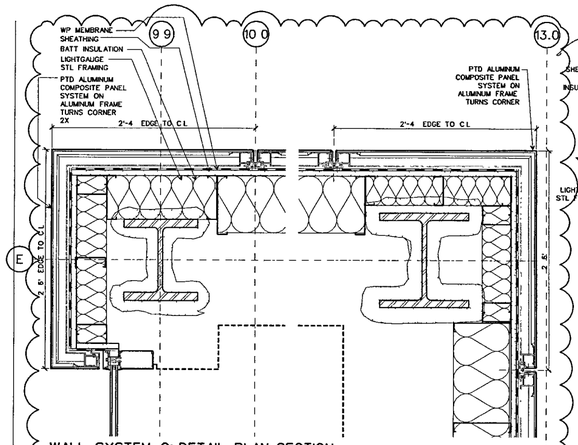

WALL SYSTEM C: DETAIL PLAN-SECTION @ CORE BUILDING, NE & SE CORNERS

SCALE 1½" = 1'-0" D-CWC03 34

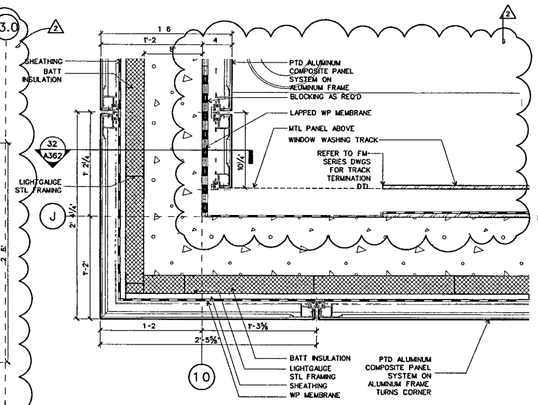

WALL SYSTEM C: DETAIL PLAN-SECTION @ PARAPET CORNER

SCALE 1½" = 1'-0" D-CWC03 33

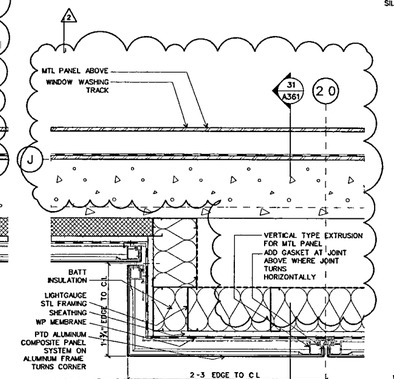

WALL SYSTEM C: DETAIL PLAN-SECTION @ PARAPET

SCALE 1½" = 1'-0" D-CWC03 32

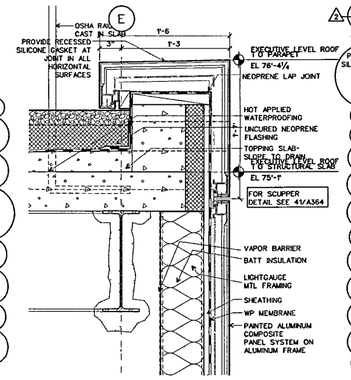

WALL SYSTEM C: DETAIL SECTION @ CORE PARAPET

SCALE 1½" = 1'-0" D-CWC03 31

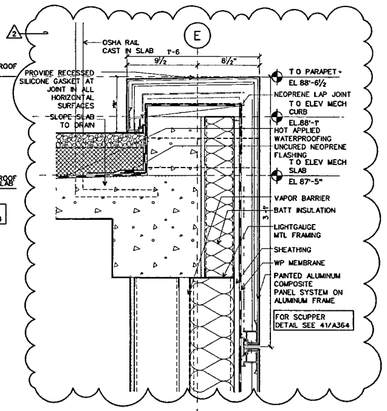

WALL SYSTEM C: DETAIL SECTION @ PARAPET ELEV MECH

SCALE 1½ = 1-0 D-CWC03 30

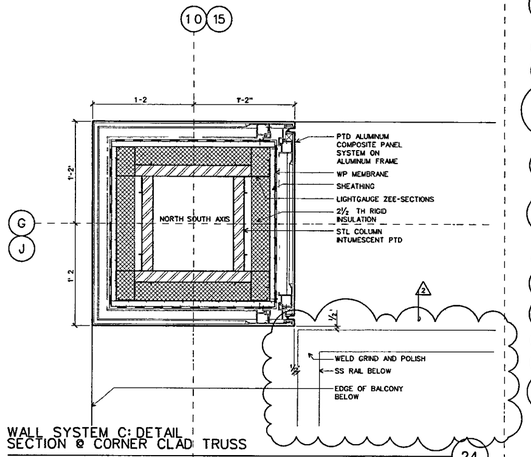

WALL SYSTEM C: DETAIL SECTION @ CORNER CLAD TRUSS

SCALE 1½" = 1-0 D-CWC03 24

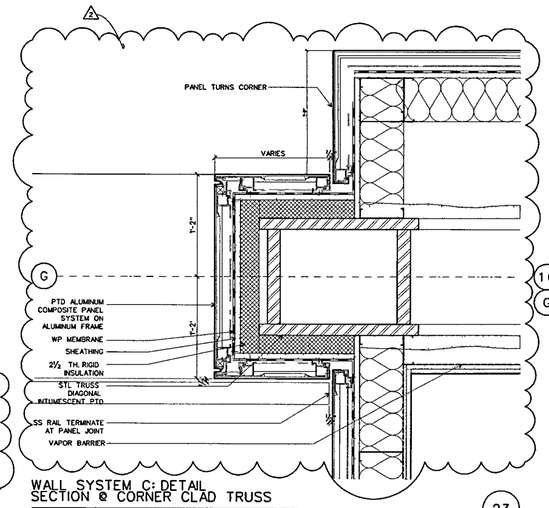

WALL SYSTEM C: DETAIL SECTION @ CORNER CLAD TRUSS

SCALE 1½' = 1'-0" D-CWC03 23

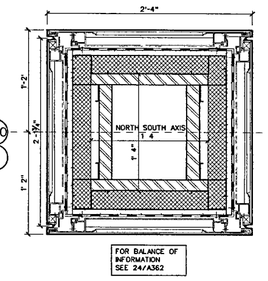

WALL SYSTEM C: DETAIL SECTION @ DIAGONAL CLAD TRUSS

SCALE 1½" = 1'-0" D-CWC03 22

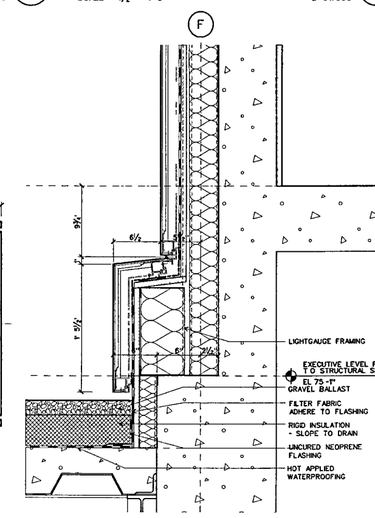

WALL SYSTEM C: DETAIL SECTION @ ELEV. MECH BASE/ROOF

SCALE 1½" = 1-0" D-CWC03 21

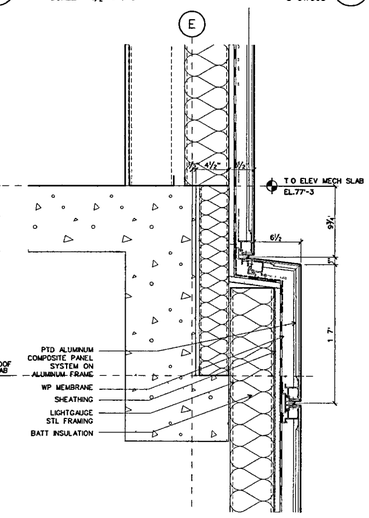

WALL SYSTEM C: DETAIL SECTION @ ELEV. MECH. BASE

SCALE 1½ = 1-0" D-CWC03 20

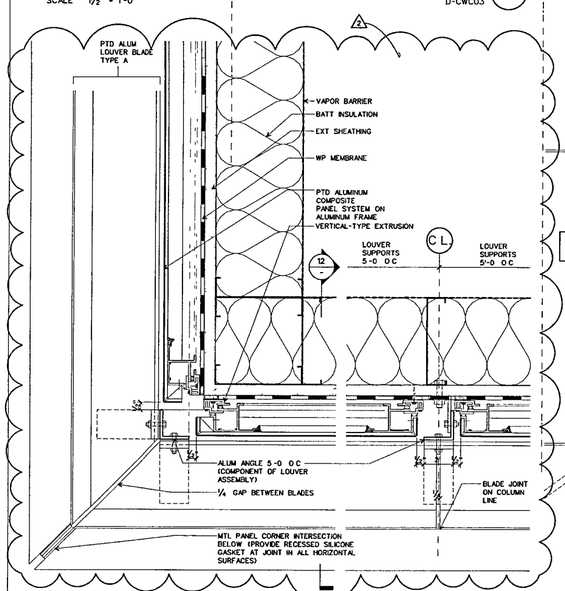

WALL SYSTEM C: DETAIL PLAN-SECTION @ LOUVER A CORNER

SCALE 3 = 1-0" D-CWC03 14

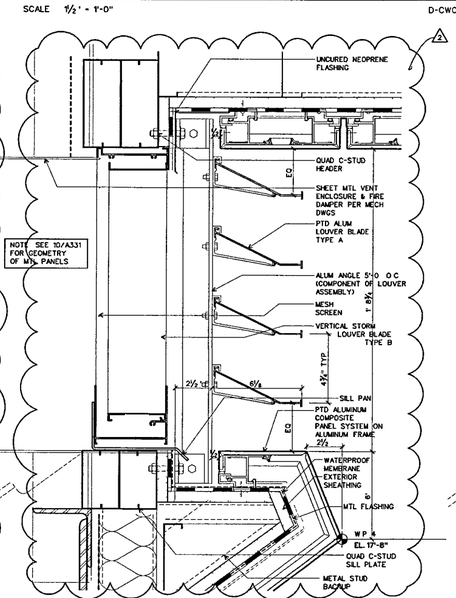

WALL SYSTEM C: DETAIL SECTION @ LOUVER A OPEN

SCALE 3 ' = 1-0 D-CWC03 13

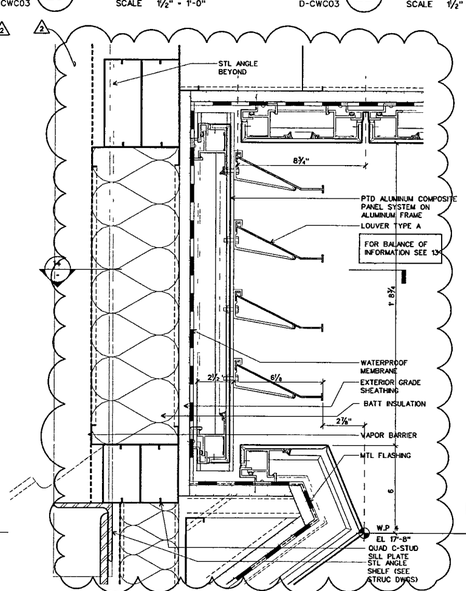

WALL SYSTEM C: DETAIL SECTION @ LOUVER A BLANKED OFF

SCALE 3 ' = 1'-0" D-CWC03 12

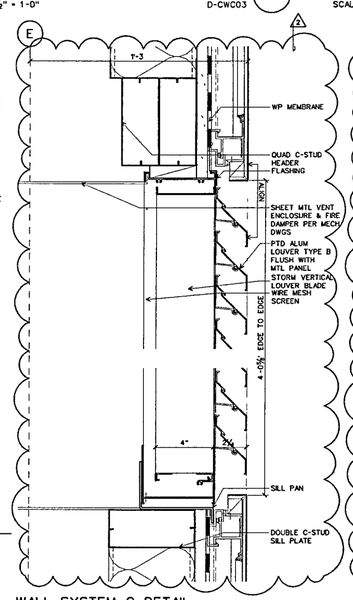

WALL SYSTEM C: DETAIL SECTION @ LOUVER B OPEN

SCALE 3 = 1-0 D-CWC03 11

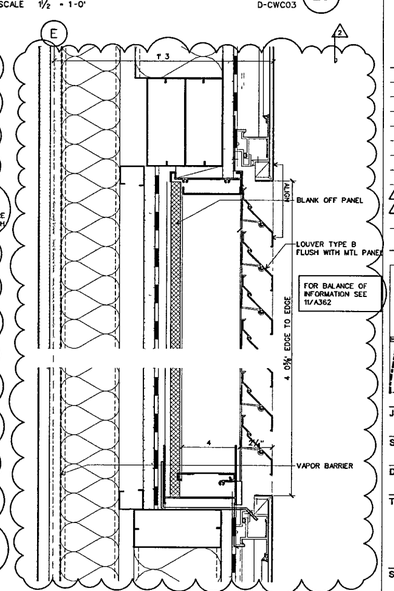

WALL SYSTEM C: DETAIL SECTION @ LOUVER B BLANKED OFF

SCALE 3 = 1-0 D-CWC03 10

WILLIAM J CLINTON PRESIDENTIAL CENTER

LITTLE ROCK, ARKANSAS

Architect

POLSHEK PARTNERSHIP LLP
320 West 13th Street
New York, New York 10014
212.807 7171

Coordinating Architects

POLK STANLEY YEARY ARCHITECTS Ltd
700 South Schiller Street
Little Rock, Arkansas 72201
501.378 0878

WITSELL EVANS RASCO
901 West Third Street
Little Rock, Arkansas 72201
501.374 5300

WOODS CARADINE ARCHITECTS
2200 South Main Street
Little Rock, Arkansas 72206
501 374.4060

Landscape Architects

HARGREAVES ASSOCIATES
118 Magazine Street
Cambridge Massachusettes 02139
617 661 0070

LANDSCAPE ARCHITECTURE, Inc.
2300 Cottondale Lane Suite 202
Little Rock, Arkansas 72202
501 374 5810

Structural Engineer

LESLIE E. ROBERTSON ASSOC., RLLP
30 Broad Street, 47th Floor
New York, New York 10004
212.750 9000

MEP Engineers

FLACK + KURTZ Inc.
475 Fifth Avenue
New York, New York 10017
212 532 9600

CROMWELL ARCHITECTS ENGINEERS
101 South Spring Street
Little Rock, Arkansas 72201
501 372.2900

Curtainwall Consultant

R. A. HEINTGES ARCHITECTS
126 Fifth Avenue, 9th Floor
New York, New York 10011
212.652-2966

Seal

RICHARD OLOOF ... REGISTERED ARCHITECT 3405 ARKANSAS

Issue	Date
3 100% Construction Documents	09/27/02
1 90% Progress Printing	08/30/02
100% Struct./CD Progress	07/01/02

Job No 9908

Scale AS NOTED

Date September 27, 2002

Title WALL SYSTEM C DETAIL SECTIONS AND PLANS

Sheet No A362

FOR OFFICIAL USE ONLY

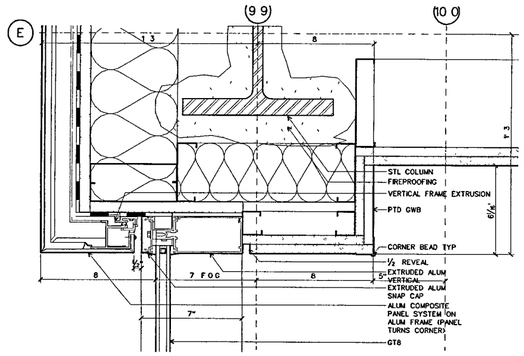

WALL SYSTEM C: DETAIL PLAN-SECTION @ CORE NORTH JAMB

SCALE 3" = 1'-0" D-CWC04 43

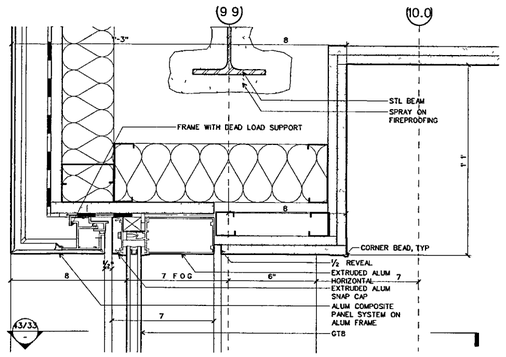

WALL SYSTEM C: DETAIL SECTION @ CORE NORTH GLAZING HEAD

SCALE 3" = 1'-0" D-CWC04 42

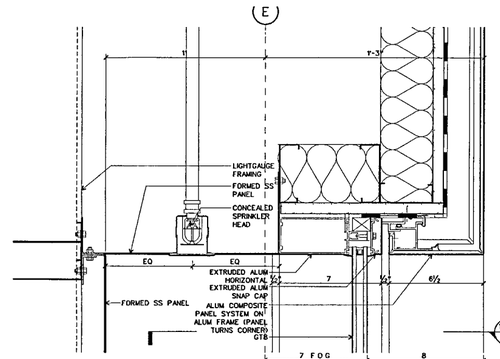

WALL SYSTEM C: DETAIL SECTION @ CORE EAST GLAZING HEAD

SCALE 3 = 1'-0 D-CWC04 41

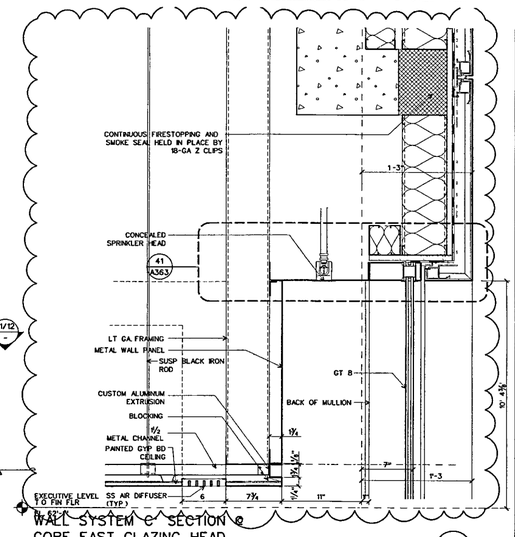

WALL SYSTEM C SECTION @ CORE EAST GLAZING HEAD

SCALE 1½" = 1'-0" D-CWC04 40

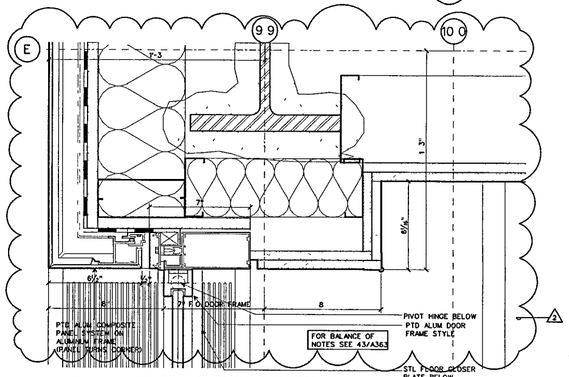

WALL SYSTEM C: DETAIL PLAN-SECTION @ CORE NORTH DOOR JAMB

SCALE 3" = 1'-0" D-CWC04 33

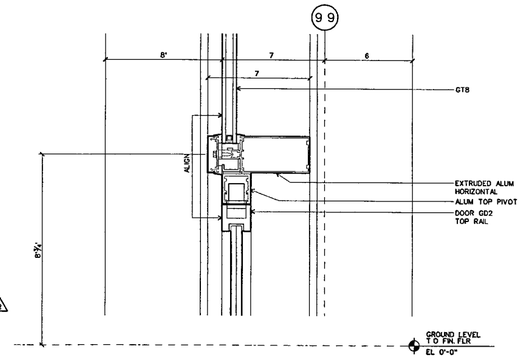

WALL SYSTEM C: DETAIL SECTION @ CORE NORTH DOOR HEAD

SCALE 3' = 1'-0" D-CWC04 32

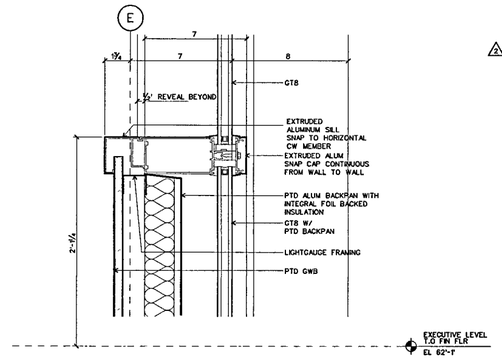

WALL SYSTEM C: DETAIL SECTION @ CORE EAST SILL, EXECUTIVE LEVEL

SCALE 3 " = 1'-0 D-CWC04 31

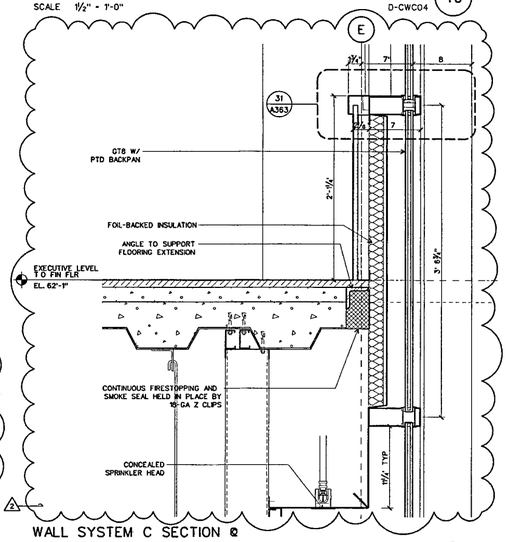

WALL SYSTEM C SECTION @ CORE EAST GLAZING

SCALE 1½" = 1'-0 D-CWC04 20

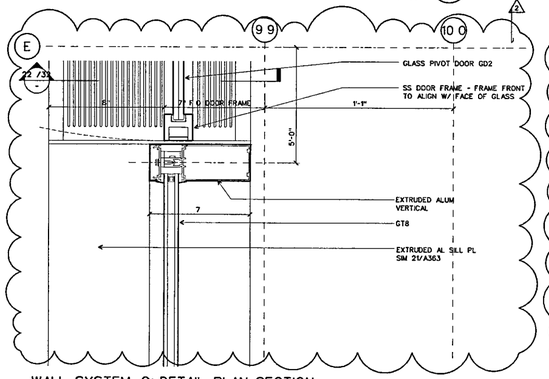

WALL SYSTEM C: DETAIL PLAN-SECTION @ CORE NORTH MULLION/DOOR JAMB

SCALE 3' = 1'-0 D-CWC04 23

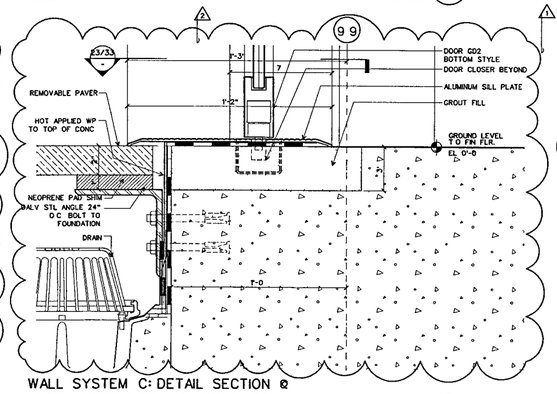

WALL SYSTEM C: DETAIL SECTION @ NORTH CORE OPENING DOOR SILL

SCALE 3 " = 1'-0" D-CWC04 22

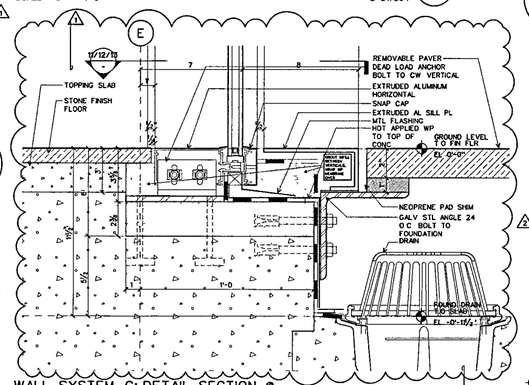

WALL SYSTEM C: DETAIL SECTION @ CORE EAST GLAZING SILL

SCALE 3' = 1'-0' D-CWC04 21

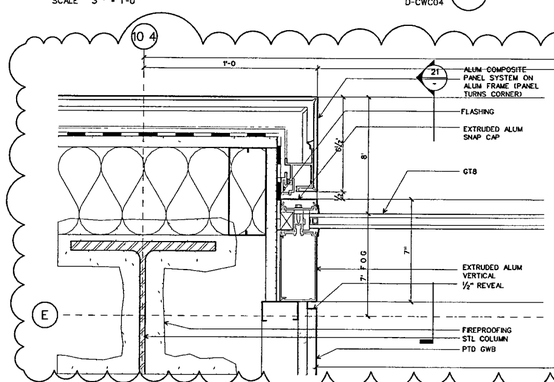

WALL SYSTEM C: DETAIL PLAN SECTION @ CORE EAST JAMB

SCALE 3 = 1'-0 D-CWC04 13

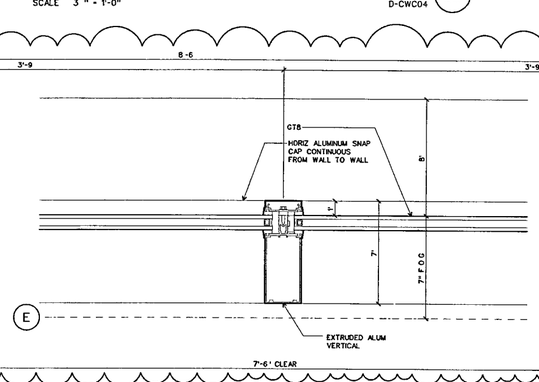

WALL SYSTEM C: DETAIL PLAN SECTION @ CORE EAST CENTRAL MULLION

SCALE 3 = 1'-0" D-CWC04 12

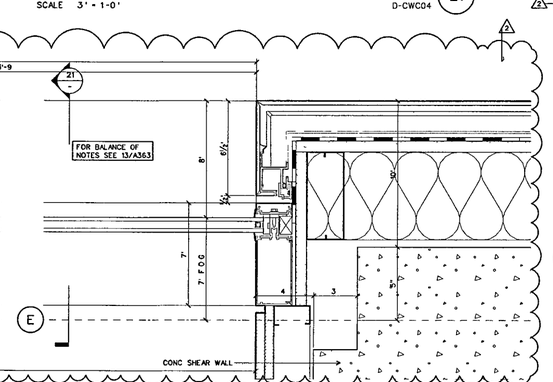

WALL SYSTEM C: DETAIL PLAN SECTION @ CORE EAST JAMB

SCALE 3 = 1'-0 D-CWC04 11

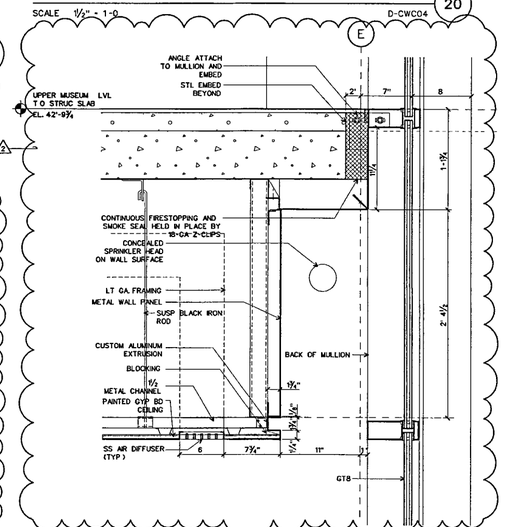

WALL SYSTEM C- SECTION @ CORE EAST GLAZING

SCALE 1½ = 1'-0 D-CWC04 10

WILLIAM J CLINTON PRESIDENTIAL CENTER

LITTLE ROCK, ARKANSAS

Architect

POLSHEK PARTNERSHIP LLP
320 West 13th Street
New York, New York 10014
212.807 7171

Coordinating Architects

POLK STANLEY YEARY ARCHITECTS Ltd
700 South Schiller Street
Little Rock, Arkansas 72201
501 378 0878

WITSELL EVANS RASCO
901 West Third Street
Little Rock, Arkansas 72201
501 374 5300

WOODS CARADINE ARCHITECTS
2200 South Main Street
Little Rock, Arkansas 72206
501 374.4060

Landscape Architects

HARGREAVES ASSOCIATES
118 Magazine Street
Cambridge Massachusettes 02139
617 661 0070

LANDSCAPE ARCHITECTURE, Inc.
2300 Cottondale Lane Suite 202
Little Rock, Arkansas 72202
501 374 5810

Structural Engineer

LESLIE E. ROBERTSON ASSOC RLLP
30 Broad Street, 47th Floor
New York, New York 10004
212.750 9000

MEP Engineers

FLACK + KURTZ Inc.
475 Fifth Avenue
New York, New York 10017
212.532 9600

CROMWELL ARCHITECTS ENGINEERS
101 South Spring Street
Little Rock, Arkansas 72201
501 372.2900

Curtainwall Consultant

R. A. HEINTGES ARCHITECTS
126 Fifth Avenue, 9th Floor
New York, New York 10011
212 652-2966

Seal

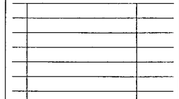

Issue	Date
100% Construction Documents	09/27/02
90% Progress Printing	08/30/02
100% Struct./ CD Progress	07/01/02

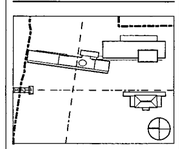

Job No 9908

Scale AS NOTED

Date September 27, 2002

Title

WALL SYSTEM C GLAZING DETAILS

Sheet No

A363

FOR OFFICIAL USE ONLY

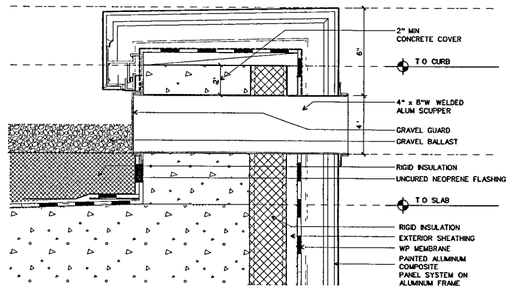

WALL SYSTEM C: GENERIC DETAIL SECTION FOR SCUPPER CONDITION

SCALE 3 = 1-0 D-CWC05 41

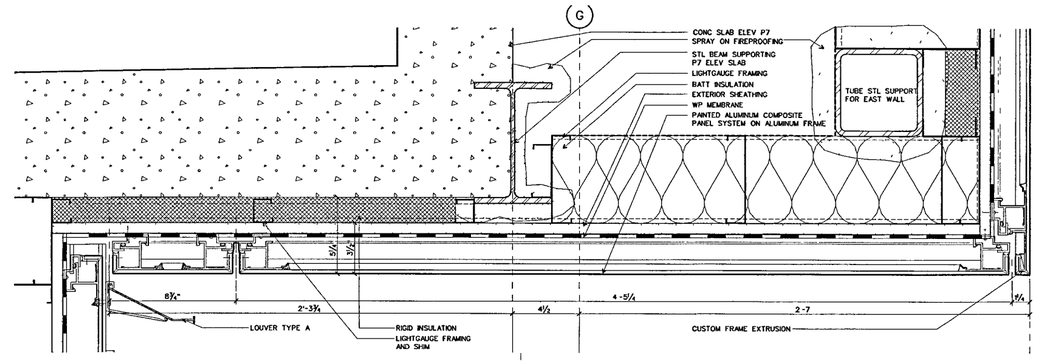

WALL SYSTEM C: SECTION DETAIL @ UNDERSIDE EAST-UNDER PE7

SCALE 3 = 1-0 D-CWC05 40

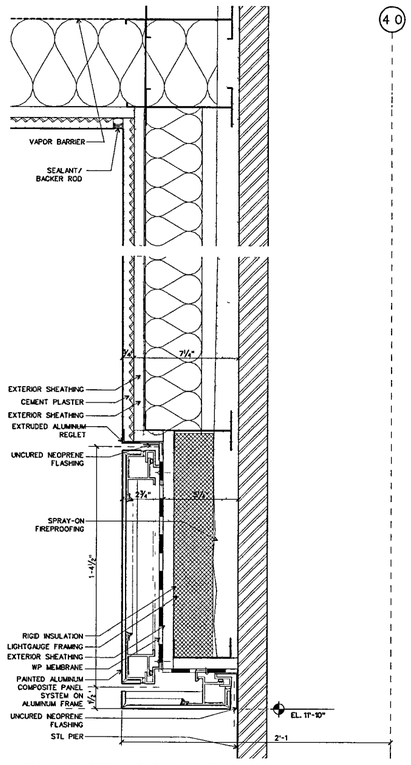

WALL SYSTEM C: DETAIL SECTION @ NORTH PIER/STAIR 2

SCALE 3' = 1-0" D-CWC05 25

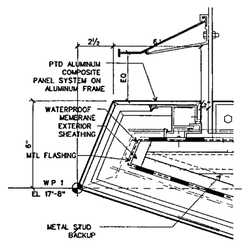

WALL SYSTEM C: SECTION DETAIL @ UNDERSIDE WEST

SCALE 3' = 1'-0 D-CWC05 24

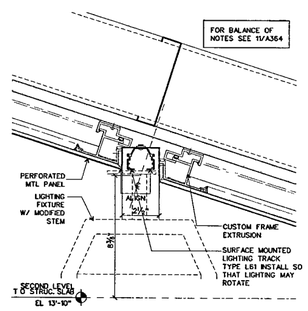

WALL SYSTEM C SECTION DETAIL @ UNDERSIDE WEST-MID-LIGHTING

SCALE 3' = 1'-0' D-CWC05 23

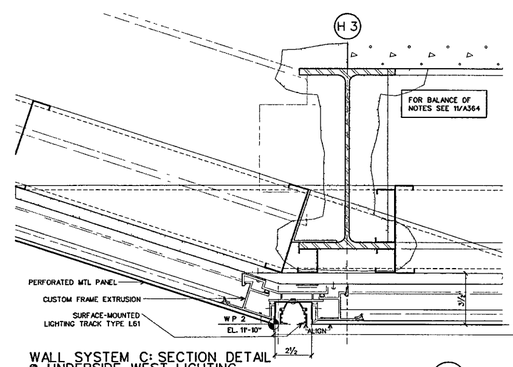

WALL SYSTEM C: SECTION DETAIL @ UNDERSIDE WEST-LIGHTING

SCALE 3" = 1-0" D-CWC05 22

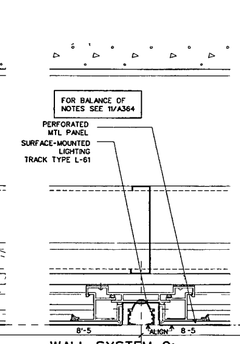

WALL SYSTEM C: SECTION DETAIL @ UNDERSIDE CTR-LIGHTING

SCALE 3" = 1'-0" D-CWC05 21

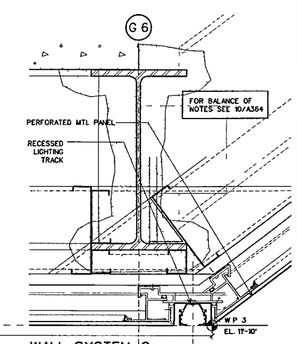

WALL SYSTEM C: SECTION DETAIL @ UNDERSIDE EAST-LIGHTING

SCALE 3" = 1'-0" D-CWC05 20

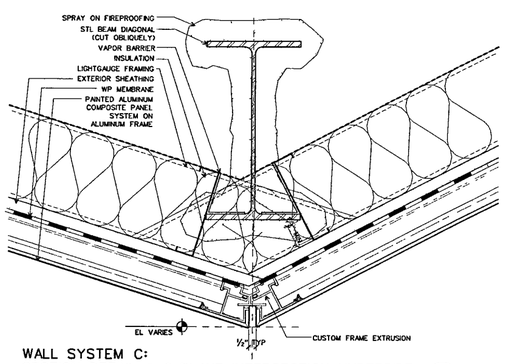

WALL SYSTEM C: SECTION DETAIL @ 2-PLANE INTERSECTION, UNDERSIDE

SCALE 3" = 1'-0' D-CWC05 13

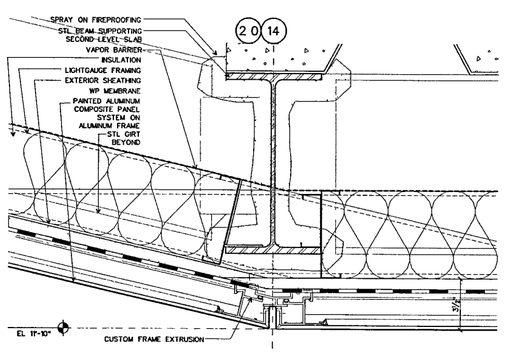

WALL SYSTEM C: SECTION DETAIL @ UNDERSIDE NORTH/SOUTH

SCALE 3 = 1-0' D-CWC05 12

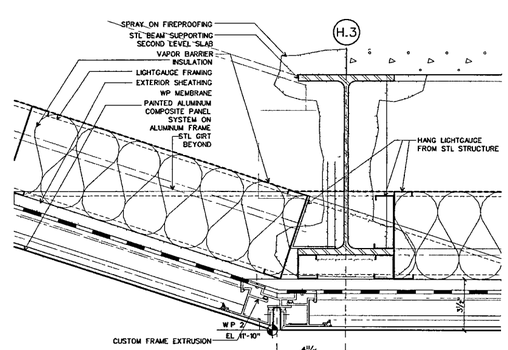

WALL SYSTEM C: SECTION DETAIL @ UNDERSIDE WEST

SCALE 3 = 1-0 D-CWC05 11

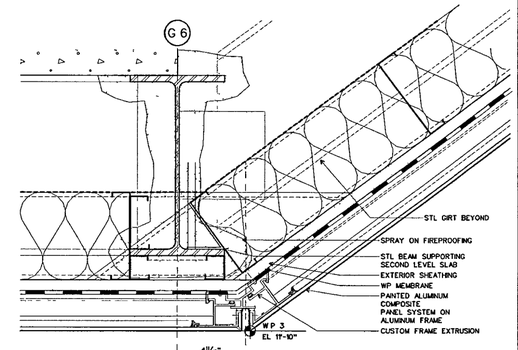

WALL SYSTEM C: SECTION DETAIL @ UNDERSIDE EAST

SCALE 3' = 1-0" D-CWC05 10

WILLIAM J CLINTON PRESIDENTIAL CENTER

LITTLE ROCK, ARKANSAS

Architect

POLSHEK PARTNERSHIP LLP
320 West 13th Street
New York, New York 10014
212.807 7171

Coordinating Architects

POLK STANLEY YEARY ARCHITECTS Ltd
700 South Schiller Street
Little Rock, Arkansas 72201
501 378 0878

WITSELL EVANS RASCO
901 West Third Street
Little Rock, Arkansas 72201
501 374 5300

WOODS CARADINE ARCHITECTS
2200 South Main Street
Little Rock Arkansas 72206
501 374.4060

Landscape Architects

HARGREAVES ASSOCIATES
118 Magazine Street
Cambridge Massachusetts 02139
617 661 0070

LANDSCAPE ARCHITECTURE, Inc.
2300 Cottondale Lane Suite 202
Little Rock, Arkansas 72202
501 374 5610

Structural Engineer

LESLIE E. ROBERTSON ASSOC RLLP
30 Broad Street, 47th Floor
New York, New York 10004
212.750 9000

MEP Engineers

FLACK + KURTZ Inc.
475 Fifth Avenue
New York, New York 10017
212 532.9600

CROMWELL ARCHITECTS ENGINEERS
101 South Spring Street
Little Rock, Arkansas 72201
501 372.2900

Curtainwall Consultant

R. A. HEINTGES ARCHITECTS
126 Fifth Avenue, 9th Floor
New York, New York 10011
212.652-2966

Seal

RICHARD OLCOTT REGISTERED ARCHITECT 3405 ARKANSAS

Issue	Date
1 100% Construction Documents*	09/27/02

*New sheet. Former details now on A362 A363

Job No 9908

Scale 3" = 1-0"

Date September 27, 2002

Title WALL SYSTEM C GLAZING DETAILS

Sheet No 1 A364

FOR OFFICIAL USE ONLY

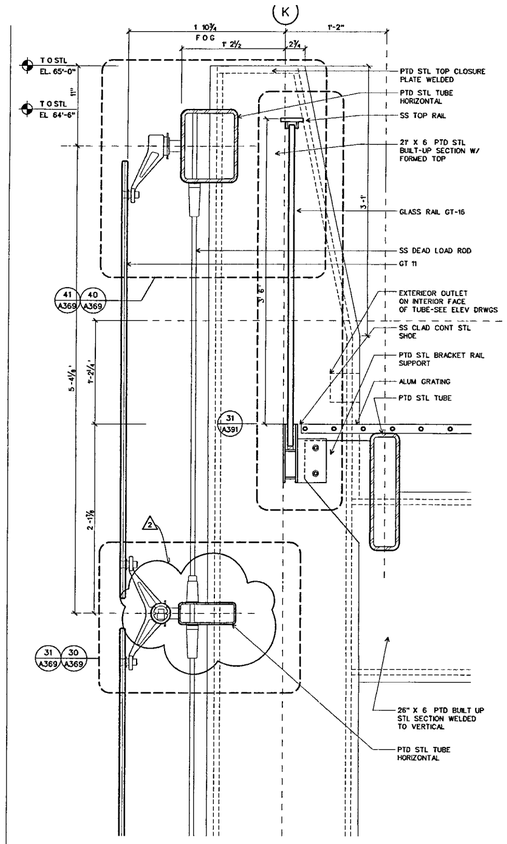

WALL SYSTEM E: DETAIL SECTION AT UPPER GRATING (22)
SCALE 1-1/2 " = 1-0' D-CWDE01

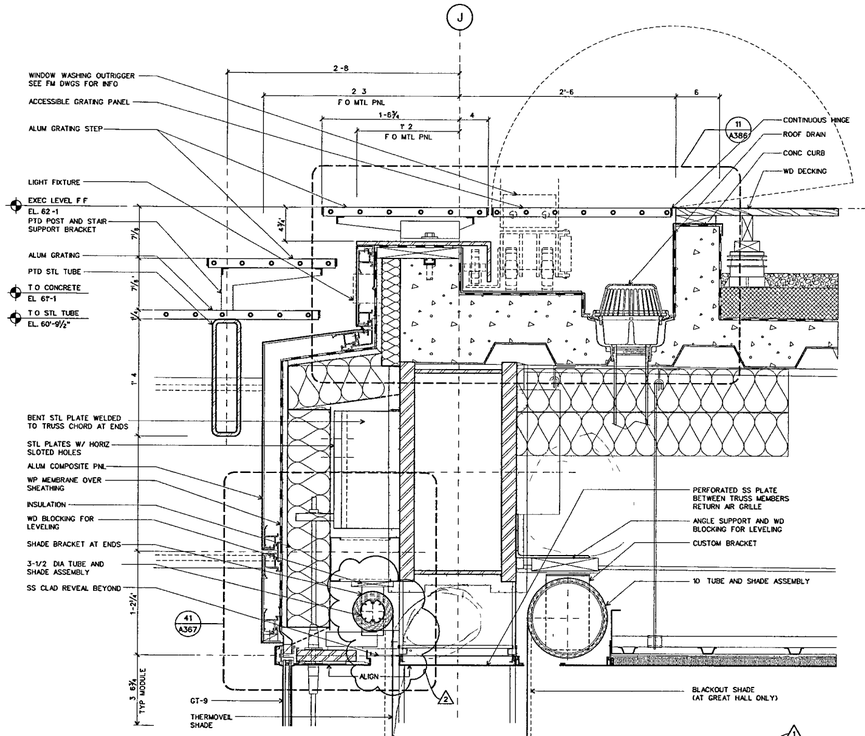

WALL SYSTEM D: DETAIL SECTION AT WEST HEAD (21)
SCALE 1-1/2 = 1-0" D-CWDE01

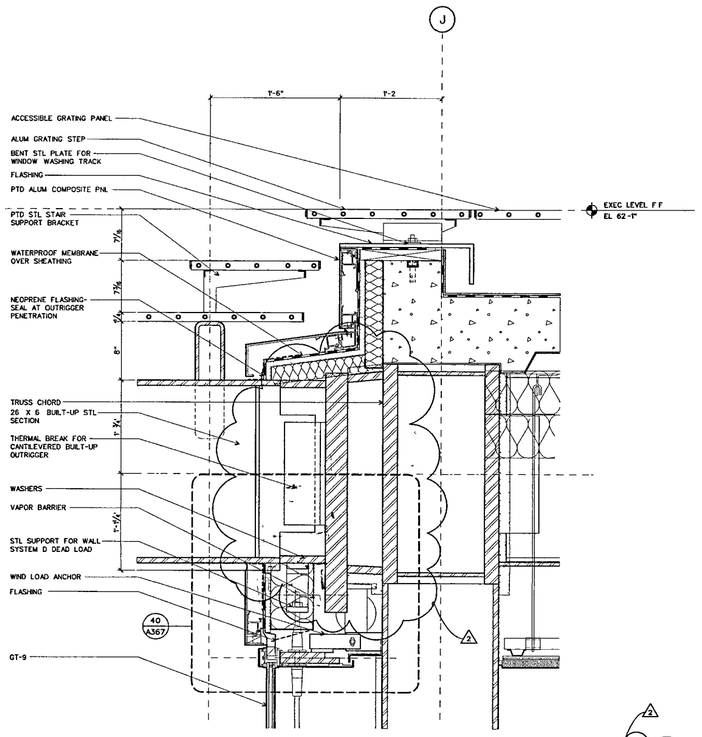

WALL SYSTEM D: SECTION AT WEST HEAD @ 30' MODULE (20)
SCALE 1-1/2 " = 1-0 D-CWDE01

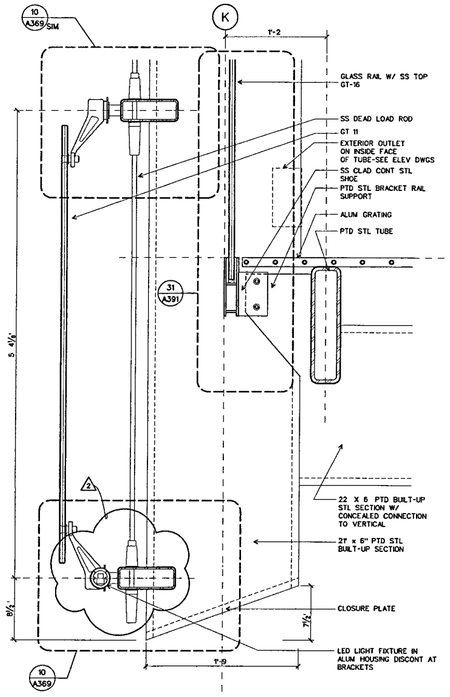

WALL SYSTEM E: DETAIL SECTION AT LOWER GRATING (12)
SCALE 1-1/2 = 1-0' D-CWDE01

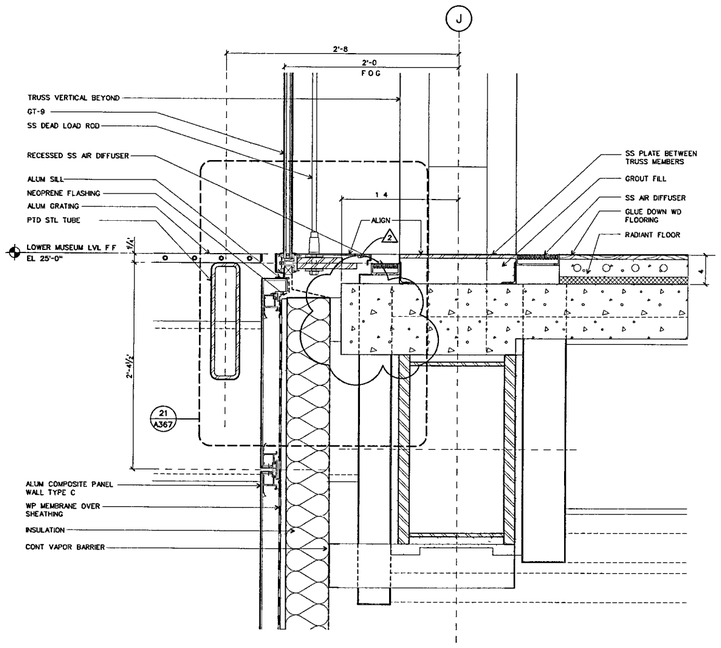

WALL SYSTEM D: DETAIL SECTION AT WEST SILL (11)
SCALE 1-1/2 = 1-0 D-CWDE01

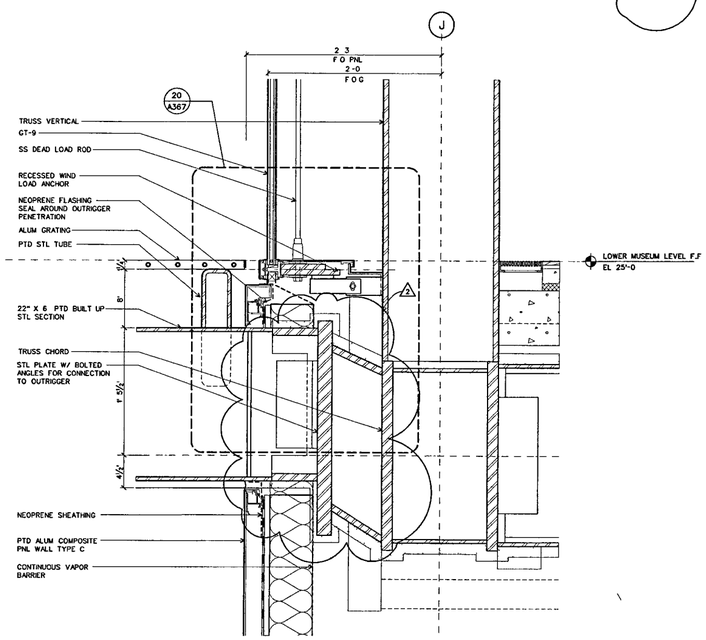

WALL SYSTEM D: SECTION AT WEST SILL @ 30' MODULE (10)
SCALE 1-1/2 " = 1'-0 D-CWDE01

WILLIAM J CLINTON PRESIDENTIAL CENTER

LITTLE ROCK, ARKANSAS

Architect

POLSHEK PARTNERSHIP LLP
320 West 13th Street
New York, New York 10014
212 807 7171

Coordinating Architects

POLK STANLEY YEARY ARCHITECTS Ltd
700 South Schiller Street
Little Rock Arkansas 72201
501 378 0878

WITSELL EVANS RASCO
901 West Third Street
Little Rock, Arkansas 72201
501 374 5300

WOODS CARADINE ARCHITECTS
2200 South Main Street
Little Rock, Arkansas 72206
501 374 4060

Landscape Architects

HARGREAVES ASSOCIATES
118 Magazine Street
Cambridge Massachusettes 02139
617.661 0070

LANDSCAPE ARCHITECTURE, Inc.
2300 Cottondale Lane Suite 202
Little Rock, Arkansas 72202
501.374 5610

Structural Engineer

LESLIE E ROBERTSON ASSOC , RLLP
30 Broad Street, 47th Floor
New York New York 10004
212.750 9000

MEP Engineers

FLACK + KURTZ Inc
475 Fifth Avenue
New York, New York 10017
212 532.9600

CROMWELL ARCHITECTS ENGINEERS
101 South Spring Street
Little Rock, Arkansas 72201
501 372 2900

Curtainwall Consultant

R. A. HEINTGES ARCHITECTS
126 Fifth Avenue, 9th Floor
New York, New York 10011
212 652-2966

Seal

RICHARD OLCOTT REGISTERED ARCHITECT 3405 ARKANSAS

Issue	Date
2 100% Construction Documents	09/27/02
1 90% Progress Printing	08/30/02
100% Struct./ CD Progress	07/01/02
100% Design Development	03/01/02

Job No 9908

Scale 1-1/2" = 1'-0"

Date September 27, 2002

Title **WALL SYSTEMS D AND E DETAIL SECTIONS**

Sheet No **A365**

FOR OFFICIAL USE ONLY

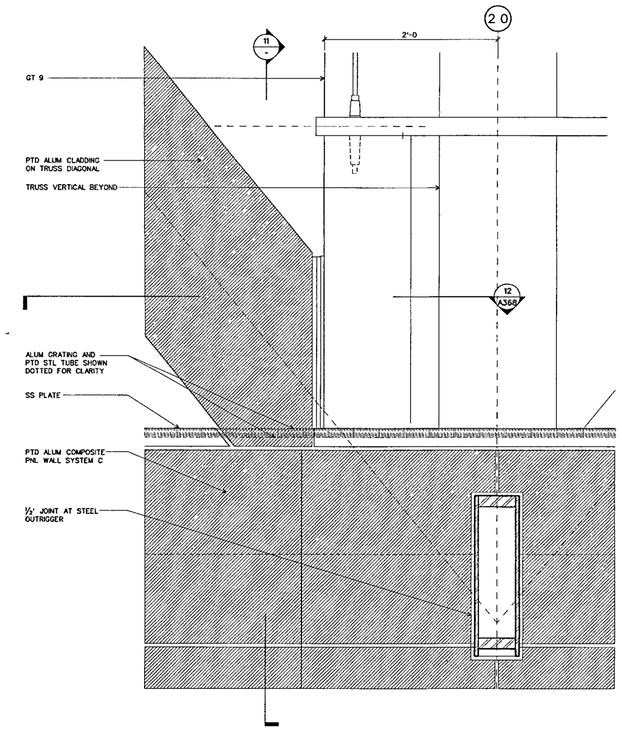

WALL SYSTEM D: ELEVATION OF SILL AT TRUSS (20)

SCALE 1-1/2" = 1-0 D-CWD01

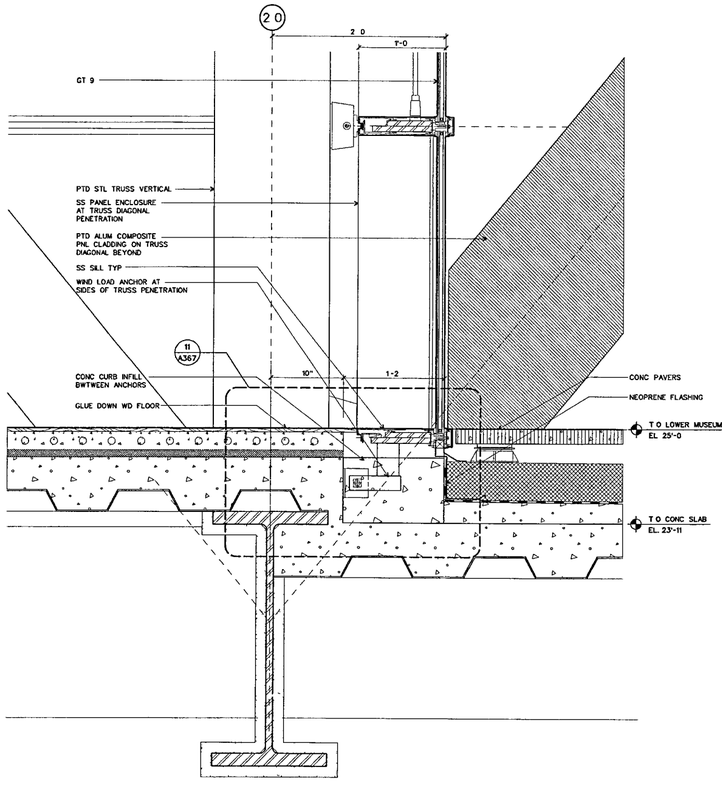

WALL SYSTEM D: SECTION OF SILL AT NORTH WALL (12)

SCALE 1-1/2" = 1-0 D-CWD01

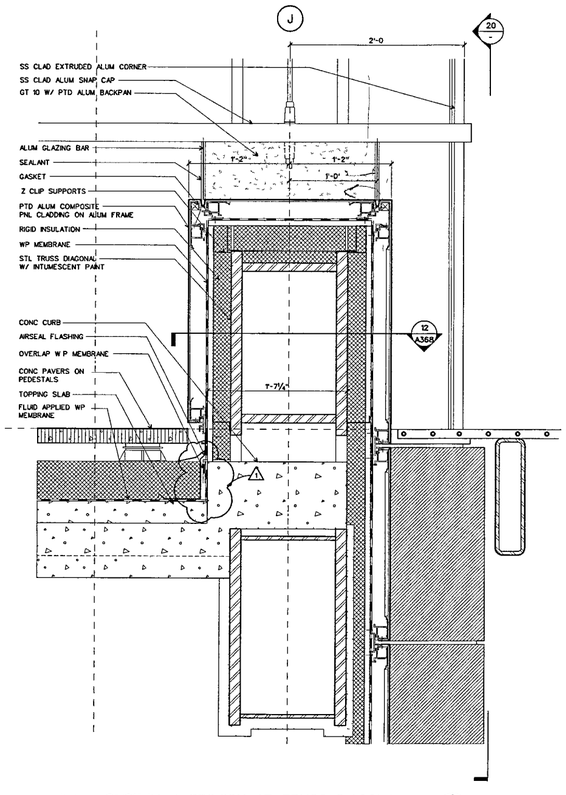

WALL SYSTEM D: SECTION AT TRUSS DIAGONAL (11)

SCALE 1-1/2" = 1-0' D-CWD01

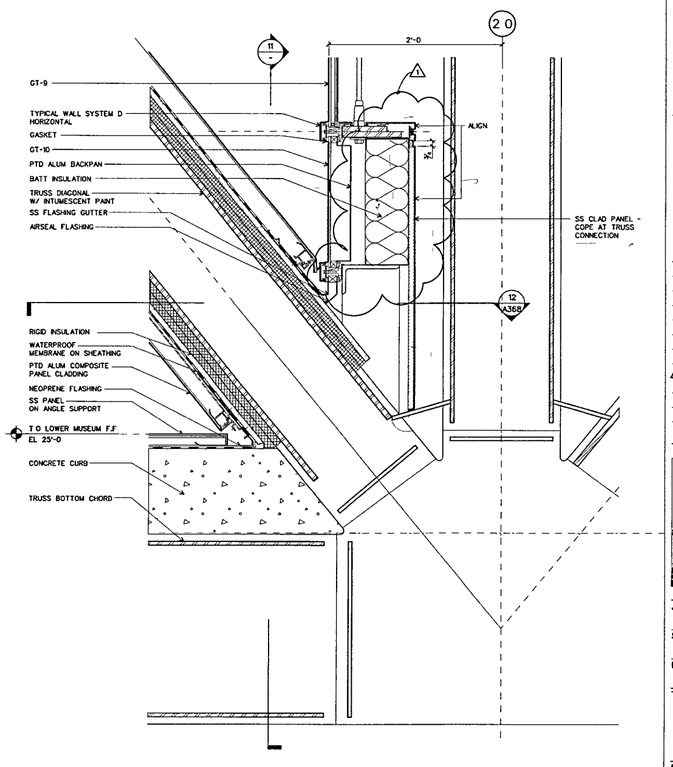

WALL SYSTEM D: SECTION OF SILL AT TRUSS (10)

SCALE 1-1/2" = 1'-0 D-CWD01

WILLIAM J CLINTON PRESIDENTIAL CENTER

LITTLE ROCK, ARKANSAS

Architect

POLSHEK PARTNERSHIP LLP
320 West 13th Street
New York, New York 10014
212 807 7171

Coordinating Architects

POLK STANLEY YEARY ARCHITECTS Ltd
700 South Schiller Street
Little Rock, Arkansas 72201
501 378 0878

WITSELL EVANS RASCO
901 West Third Street
Little Rock, Arkansas 72201
501 374 5300

WOODS CARADINE ARCHITECTS
2200 South Main Street
Little Rock Arkansas 72206
501 374 4060

Landscape Architects

HARGREAVES ASSOCIATES
118 Magazine Street
Cambridge Massachusettes 02139
617 661 0070

LANDSCAPE ARCHITECTURE, Inc.
2300 Cottondale Lane Suite 202
Little Rock, Arkansas 72202
501 374 5610

Structural Engineer

LESLIE E. ROBERTSON ASSOC., RLLP
30 Broad Street, 47th Floor
New York New York 10004
212.750 9000

MEP Engineers

FLACK + KURTZ Inc.
475 Fifth Avenue
New York, New York 10017
212.532.9600

CROMWELL ARCHITECTS ENGINEERS
101 South Spring Street
Little Rock, Arkansas 72201
501 372.2900

Curtainwall Consultant

R. A. HEINTGES ARCHITECTS
126 Fifth Avenue 9th Floor
New York, New York 10011
212 652-2966

Seal

RICHARD OLCZAK REGISTERED ARCHITECT 3405 ARKANSAS

Issue	Date
1 100% Construction Documents	09/27/02
90% Progress Printing	08/30/02
100% Struct./ CD Progress	07/01/02
100% Design Development	03/01/02

Job No 9908

Scale 1-1/2" = 1'-0"

Date September 27, 2002

Title WALL SYSTEMS D SECTION DETAILS

Sheet No A366

FOR OFFICIAL USE ONLY

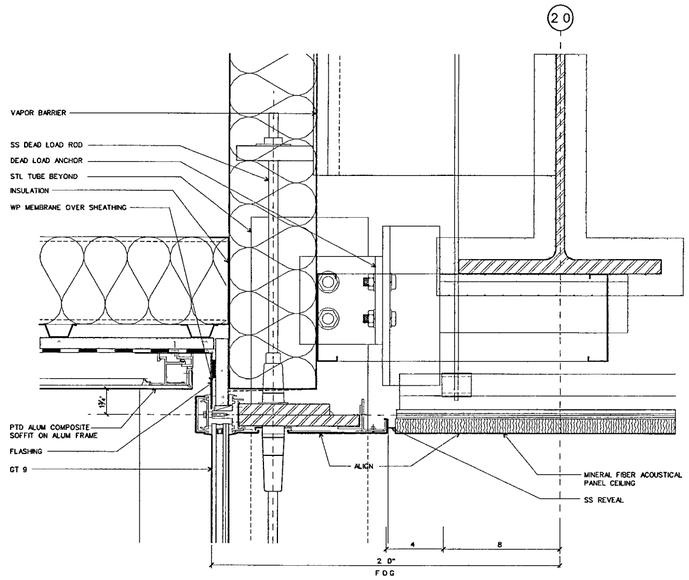

WALL SYSTEM D SECTION AT NORTH END HEAD (32)
SCALE 3" = 1'-0" D-CWDE02

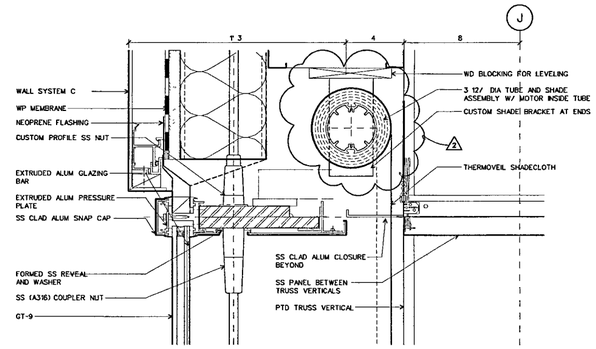

WALL SYSTEM D- SECTION AT HEAD AT 30' MODULE (41)
SCALE 3 = 1-0 D-CWDE02

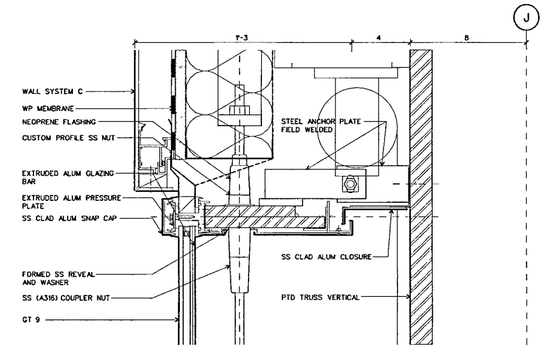

WALL SYSTEM D- DETAIL SECTION AT HEAD (40)
SCALE 3 = 1-0 D-CWDE02

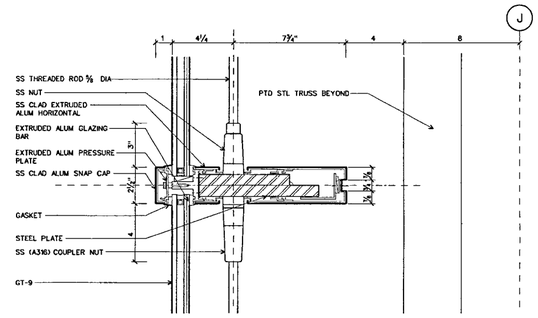

WALL SYSTEM D: SECTION AT TYPICAL HORIZONTAL (31)
SCALE 3" = 1-0 D-CWDE02

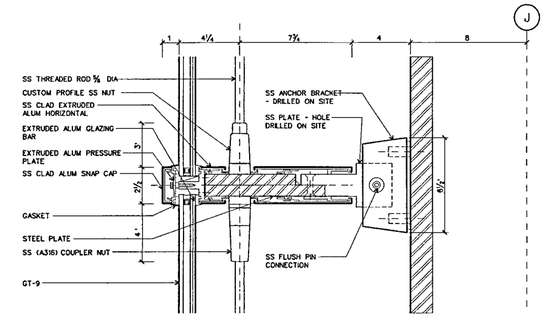

WALL SYSTEM D- DETAIL SECTION AT ANCHOR (30)
SCALE 3" = 1'-0" D-CWDE02

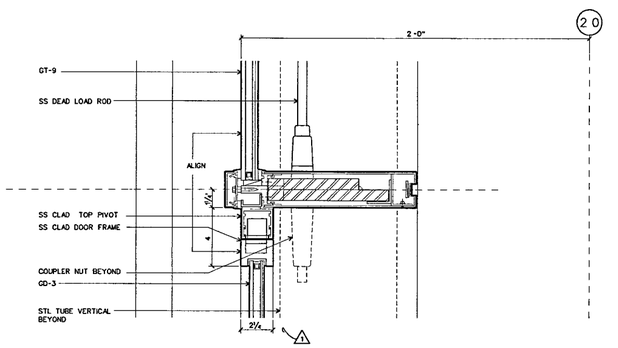

WALL SYSTEM D: SECTION AT NORTH END DOOR (22)
SCALE 3 = 1-0 D-CWDE02

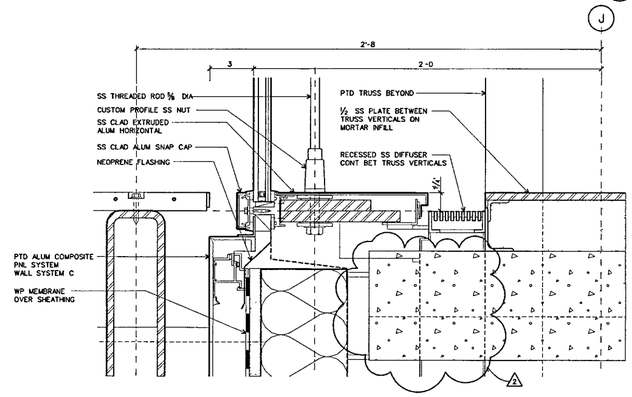

WALL SYSTEM D: SECTION AT SILL AT 30' MODULE (21)
SCALE 3" = 1-0 D-CWDE02

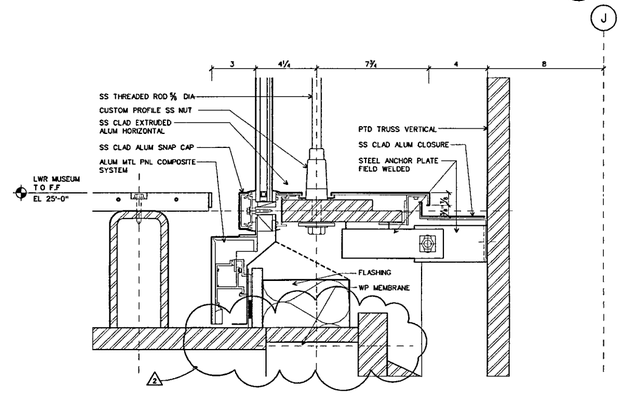

WALL SYSTEM D: DETAIL SECTION AT SILL (20)
SCALE 3 = 1'-0 D-CWDE02

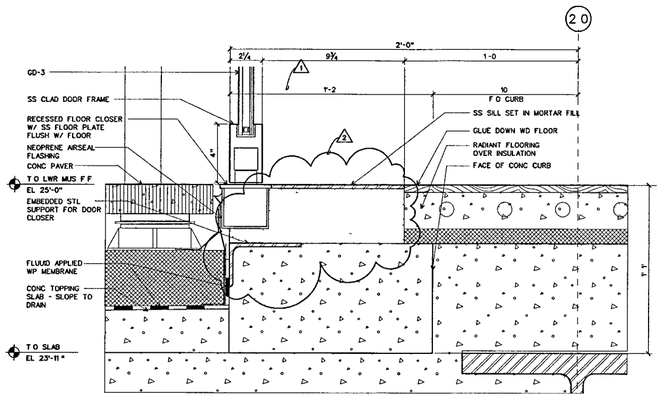

WALL SYSTEM D: SECTION AT NORTH END DOOR SILL (12)
SCALE 3 = 1-0' D-CWDE02

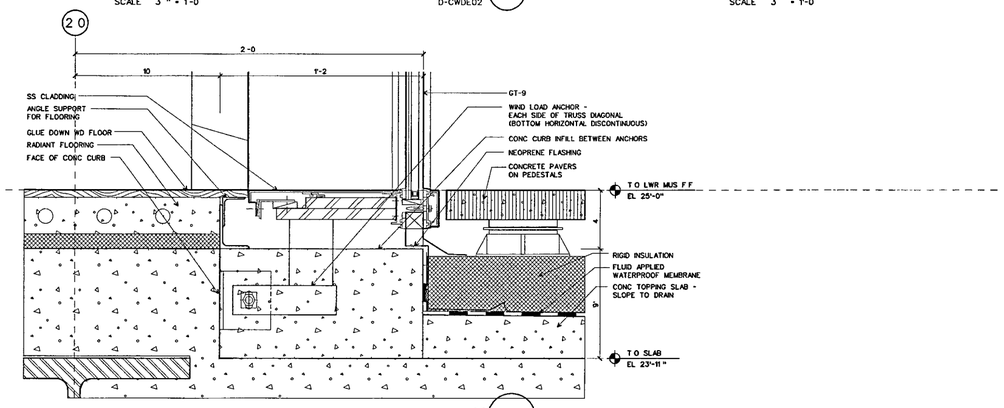

WALL SYSTEM D: SECTION AT SILL NORTH END (11)
SCALE 3 = 1-0 D-CWDE02

WILLIAM J CLINTON PRESIDENTIAL CENTER

LITTLE ROCK, ARKANSAS

Architect
POLSHEK PARTNERSHIP LLP
320 West 13th Street
New York, New York 10014
212 807 7171

Coordinating Architects
POLK STANLEY YEARY ARCHITECTS Ltd
700 South Schiller Street
Little Rock, Arkansas 72201
501 378 0878

WITSELL EVANS RASCO
901 West Third Street
Little Rock, Arkansas 72201
501 374 5300

WOODS CARADINE ARCHITECTS
2200 South Main Street
Little Rock, Arkansas 72206
501 374 4060

Landscape Architects
HARGREAVES ASSOCIATES
118 Magazine Street
Cambridge Massachusettes 02139
617 661 0070

LANDSCAPE ARCHITECTURE, Inc.
2300 Cottondale Lane Suite 202
Little Rock, Arkansas 72202
501 374 5610

Structural Engineer
LESLIE E ROBERTSON ASSOC , RLLP
30 Broad Street, 47th Floor
New York, New York 10004
212 750 9000

MEP Engineers
FLACK + KURTZ Inc.
475 Fifth Avenue
New York, New York 10017
212 532 9600

CROMWELL ARCHITECTS ENGINEERS
101 South Spring Street
Little Rock, Arkansas 72201
501 372 2900

Curtainwall Consultant
R. A. HEINTGES ARCHITECTS
126 Fifth Avenue 9th Floor
New York New York 10011
212.652-2966

Seal

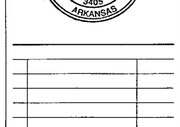

Issue	Date
2 100% Construction Documents	09/27/02
1 90% Progress Printing	08/30/02
100% Struct./ CD Progress	07/01/02
100% Design Development	03/01/02

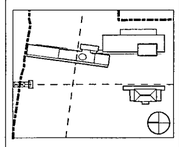

Job No 9908

Scale 3" = 1'-0"

Date September 27, 2002

Title WALL SYSTEMS D SECTION DETAILS

Sheet No A367

FOR OFFICIAL USE ONLY

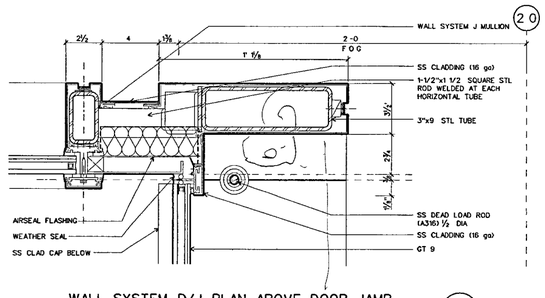

WALL SYSTEM D/J PLAN ABOVE DOOR JAMB (33)
SCALE 3" = 1'-0" D-CWDE03

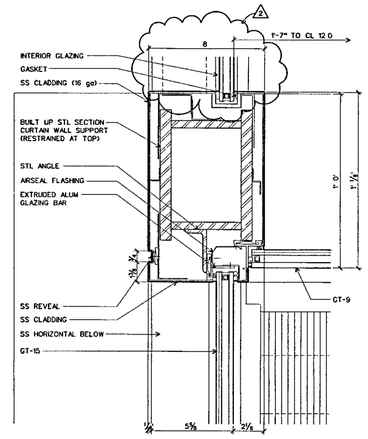

WALL SYSTEM D/K: PLAN DETAIL ABOVE DOOR (42)
SCALE 3" = 1'-0" D-CWDE03

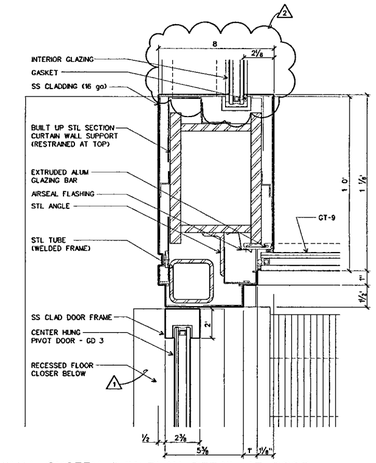

WALL SYSTEM D/K: PLAN DETAIL AT DOOR (41)
SCALE 3" = 1'-0" D-CWDE03

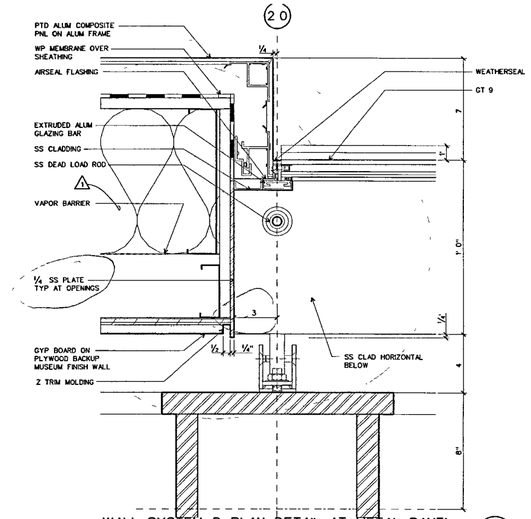

WALL SYSTEM D: PLAN DETAIL AT METAL PANEL (40)
SCALE 3" = 1'-0" D-CWDE03

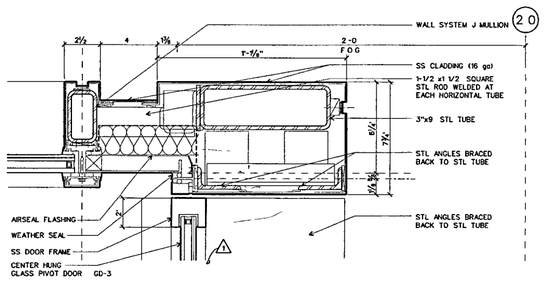

WALL SYSTEM D/J: PLAN DETAIL AT DOOR JAMB (23)
SCALE 3" = 1'-0" D-CWDE03

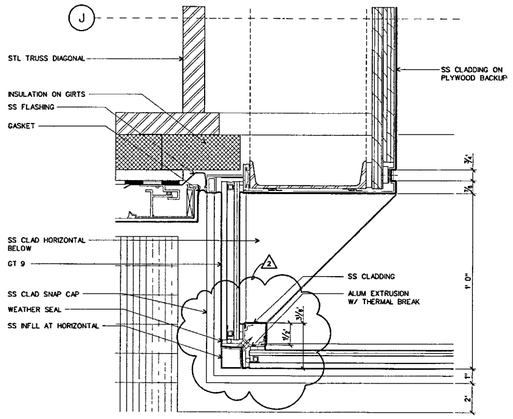

WALL SYSTEM D PLAN DETAIL AT CORNER (22)
SCALE 3" = 1'-0" D-CWDE03

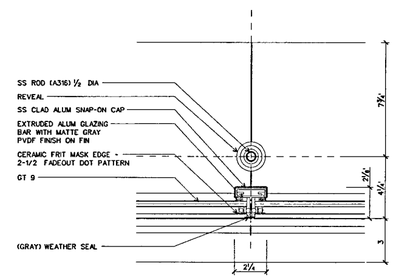

WALL SYSTEM D: PLAN AT DEAD LOAD SUPPORT (21)
SCALE 3" = 1'-0" D-CWDE03

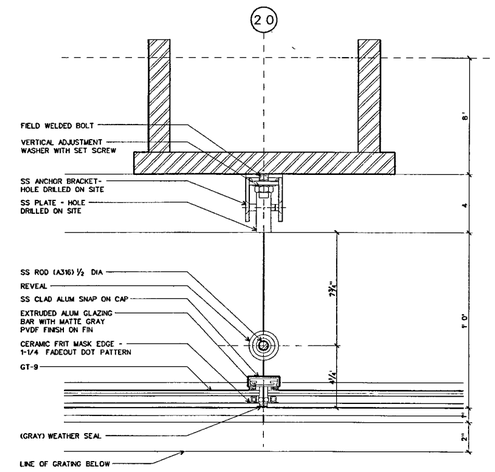

WALL SYSTEM D: PLAN DETAIL AT TRUSS VERTICAL (20)
SCALE 3" = 1'-0" D-CWDE03

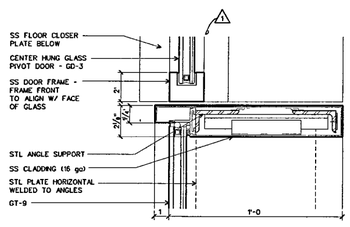

WALL SYSTEM D: PLAN DETAIL AT DOOR JAMB (13)
SCALE 3 = 1-0 D-CWDE03

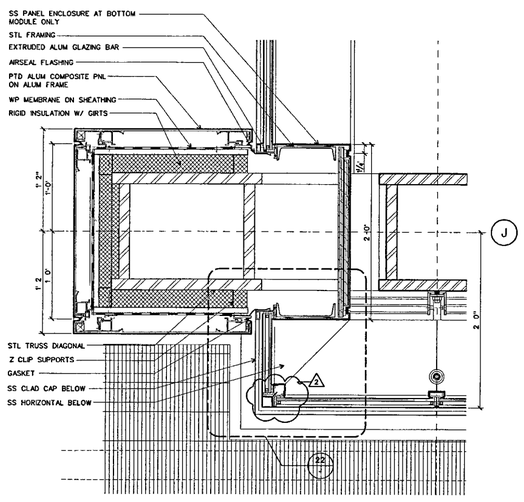

WALL SYSTEM D: PLAN DETAIL AT METAL PANEL (12)
SCALE 1-1/2 = 1-0 D-CWDE03

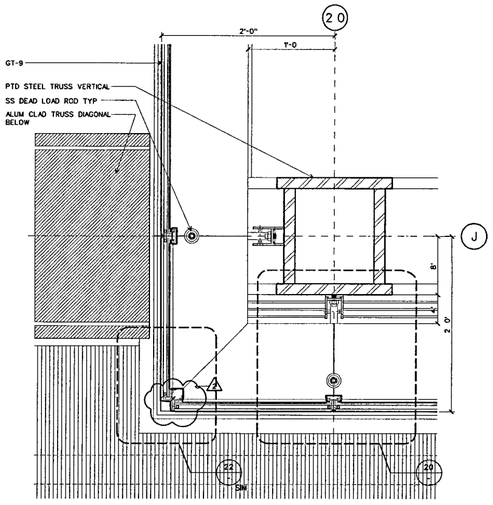

WALL SYSTEM D: PLAN AT CORNER (11)
SCALE 1-1/2 = 1-0 D-CWDE03

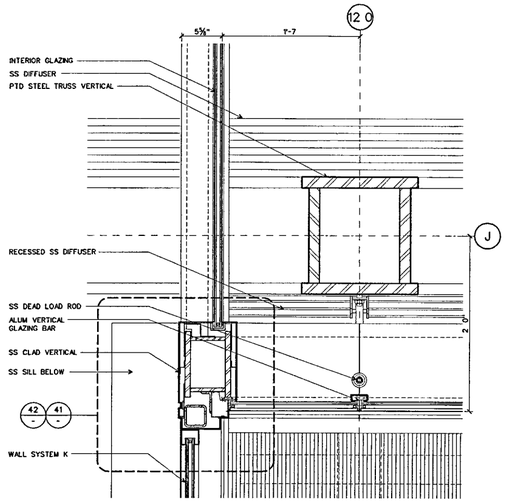

WALL SYSTEM D/K: PLAN AT ESCALATOR (10)
SCALE 1-1/2" = 1-0" D-CWDE03

WILLIAM J CLINTON PRESIDENTIAL CENTER

LITTLE ROCK, ARKANSAS

Architect

POLSHEK PARTNERSHIP LLP
320 West 13th Street
New York, New York 10014
212.807 7171

Coordinating Architects

POLK STANLEY YEARY ARCHITECTS Ltd
700 South Schiller Street
Little Rock, Arkansas 72201
501 378 0878

WITSELL EVANS RASCO
901 West Third Street
Little Rock, Arkansas 72201
501 374 5300

WOODS CARADINE ARCHITECTS
2200 South Main Street
Little Rock, Arkansas 72206
501 374 4060

Landscape Architects

HARGREAVES ASSOCIATES
118 Magazine Street
Cambridge, Massachusettes 02139
617 661 0070

LANDSCAPE ARCHITECTURE, Inc.
2300 Cottondale Lane Suite 202
Little Rock, Arkansas 72202
501 374 5810

Structural Engineer

LESLIE E. ROBERTSON ASSOC., RLLP
30 Broad Street, 47th Floor
New York New York 10004
212.750 9000

MEP Engineers

FLACK + KURTZ Inc.
475 Fifth Avenue
New York, New York 10017
212 532.9600

CROMWELL ARCHITECTS ENGINEERS
101 South Spring Street
Little Rock, Arkansas 72201
501 372 2900

Curtainwall Consultant

R. A. HEINTGES ARCHITECTS
126 Fifth Avenue, 9th Floor
New York, New York 10011
212 652-2966

Seal

RICHARD OLCOTT ARCHITECT 3405 ARKANSAS

Issue	Date
100% Construction Documents	09/27/02
90% Progress Printing	08/30/02
100% Struct./ CD Progress	07/01/02
100% Design Development	03/01/02

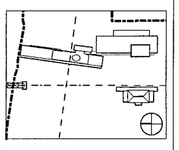

Job No: 9908

Scale: AS NOTED

Date: September 27, 2002

Title: WALL SYSTEMS D PLAN DETAILS

Sheet No: A368

FOR OFFICIAL USE ONLY

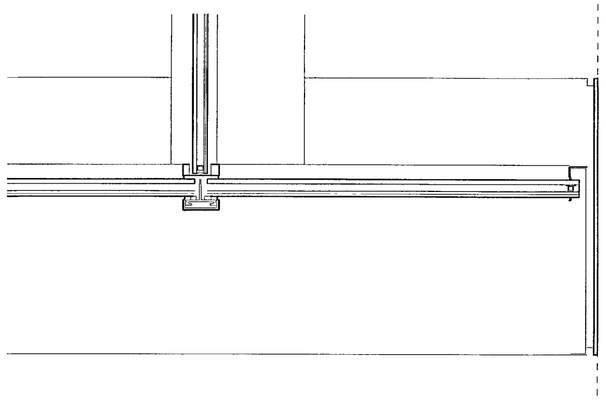

WALL SYSTEM D: PLAN DETAIL AT CLERESTORY (30)
SCALE 3 = 1'-0" D-CWD02

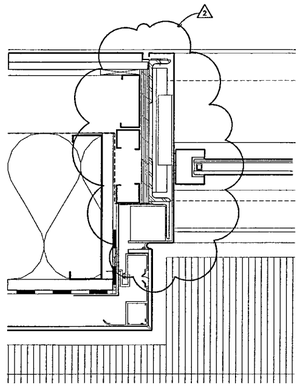

WALL SYSTEM D: PLAN DETAIL AT DOOR JAMB (23)
SCALE 3 " = 1'-0" D-CWD02

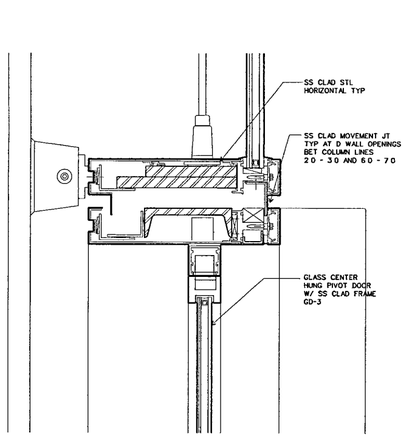

WALL SYSTEM D: DETAIL AT DOOR HEAD/ MOVE JT (22)
SCALE 3" = 1'-0" D-CWD02

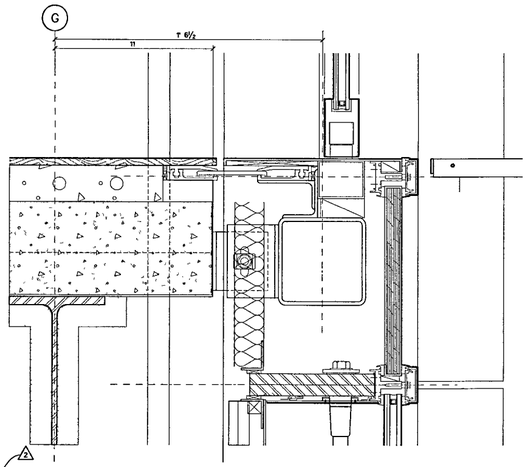

WALL SYSTEM D: SECTION AT CLERESTORY SILL (21)
SCALE 3 " = 1'-0" D-CWD02

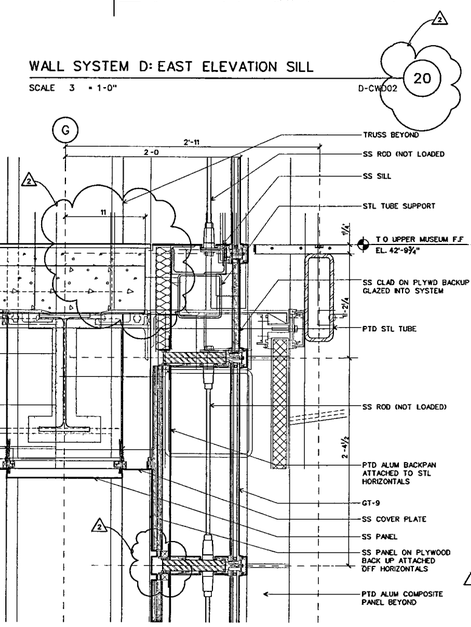

WALL SYSTEM D: EAST ELEVATION SILL (20)
SCALE 3 = 1'-0" D-CWD02

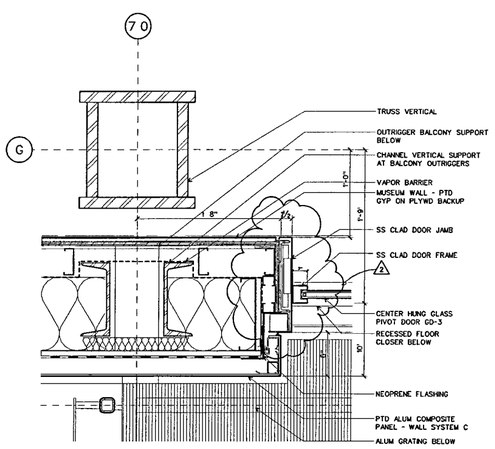

WALL SYSTEM D: PLAN DETAIL AT DOOR JAMB (13)
SCALE 1-1/2 " = 1'-0" D-CWD02

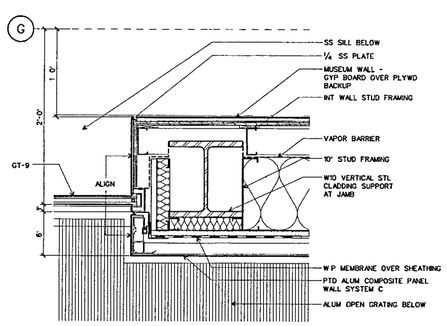

WALL SYSTEM D PLAN DETAIL AT JAMB (12)
SCALE 1-1/2 = 1'-0 D-CWD02

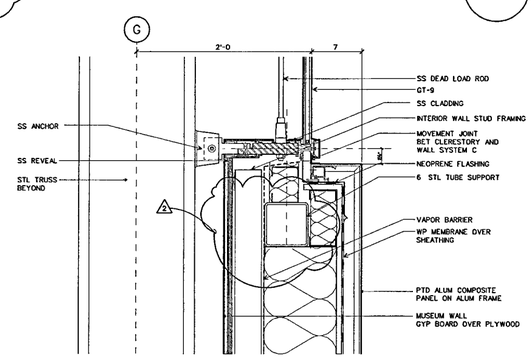

WALL SYSTEM D: SECTION AT CLERESTORY SILL (11)
SCALE 1-1/2 = 1'-0 D-CWD02

WILLIAM J CLINTON PRESIDENTIAL CENTER

LITTLE ROCK, ARKANSAS

Architect

POLSHEK PARTNERSHIP LLP
320 West 13th Street
New York, New York 10014
212.807 7171

Coordinating Architects

POLK STANLEY YEARY ARCHITECTS Ltd
700 South Schiller Street
Little Rock Arkansas 72201
501 378 0878

WITSELL EVANS RASCO
901 West Third Street
Little Rock, Arkansas 72201
501 374 5300

WOODS CARADINE ARCHITECTS
2200 South Main Street
Little Rock, Arkansas 72206
501 374 4060

Landscape Architects

HARGREAVES ASSOCIATES
118 Magazine Street
Cambridge Massachusettes 02139
617 661 0070

LANDSCAPE ARCHITECTURE, Inc
2300 Cottondale Lane Suite 202
Little Rock Arkansas 72202
501 374 5610

Structural Engineer

LESLIE E. ROBERTSON ASSOC RLLP
30 Broad Street, 47th Floor
New York, New York 10004
212 750 9000

MEP Engineers

FLACK + KURTZ Inc.
475 Fifth Avenue
New York, New York 10017
212 532.9600

CROMWELL ARCHITECTS ENGINEERS
101 South Spring Street
Little Rock, Arkansas 72201
501 372.2900

Curtainwall Consultant

R. A. HEINTGES ARCHITECTS
126 Fifth Avenue 5th Floor
New York, New York 10011
212.652-2966

Seal

RICHARD OLCOTT REGISTERED ARCHITECT 3405 ARKANSAS

Issue	Date
2 100% Construction Documents	09/27/02
1 90% Progress Printing	08/30/02

Job No 9908

Scale AS NOTED

Date September 27, 2002

Title WALL SYSTEMS D MISC DETAILS

Sheet No A368a

FOR OFFICIAL USE ONLY

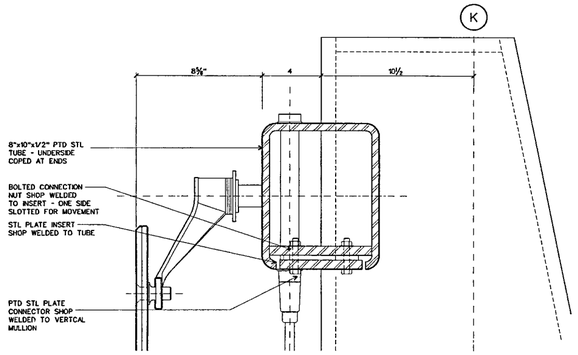

WALL SYSTEM E: SECTION AT VERTICAL 41
SCALE 3 = 1-0' D-CWDE04

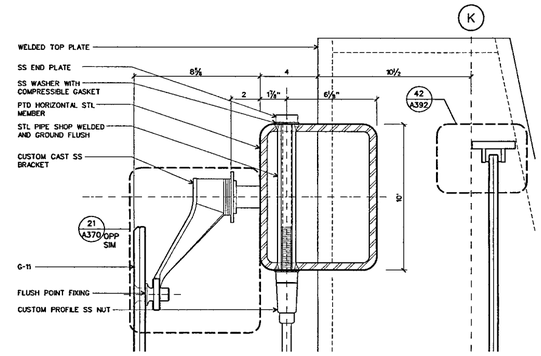

WALL SYSTEM E: SECTION AT TOP HORIZONTAL 40
SCALE 3 ' = 1-0' D-CWDE04

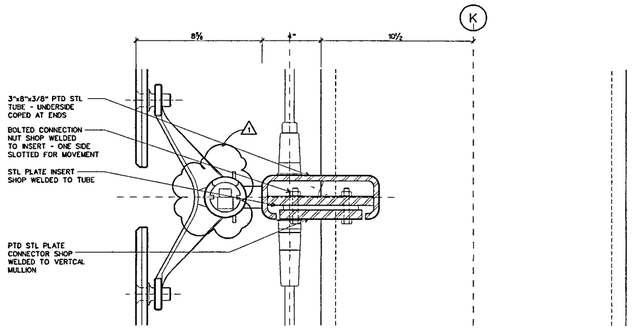

WALL SYSTEM E: SECTION AT VERTICAL 31
SCALE 3 = 1-0 D-CWDE04

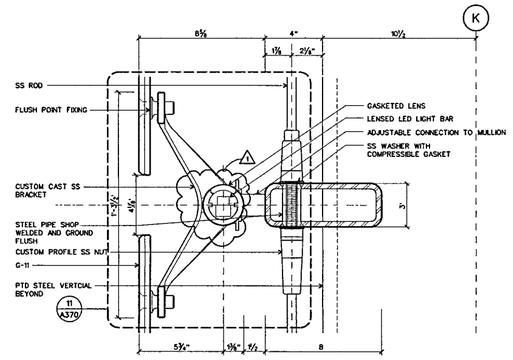

WALL SYSTEM E: SECTION AT TYP HORIZONTAL 30
SCALE 3 " = 1-0" D-CWDE04

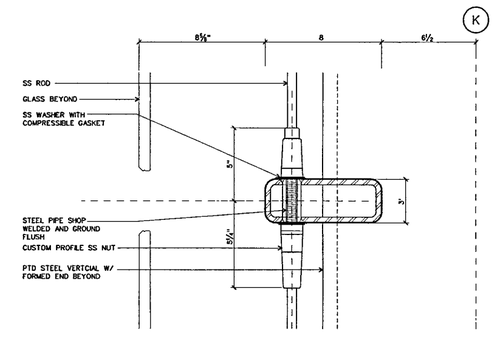

WALL SYSTEM E: SECTION AT HORIZONTAL 20
SCALE 3 ' = 1'-0 D-CWDE04

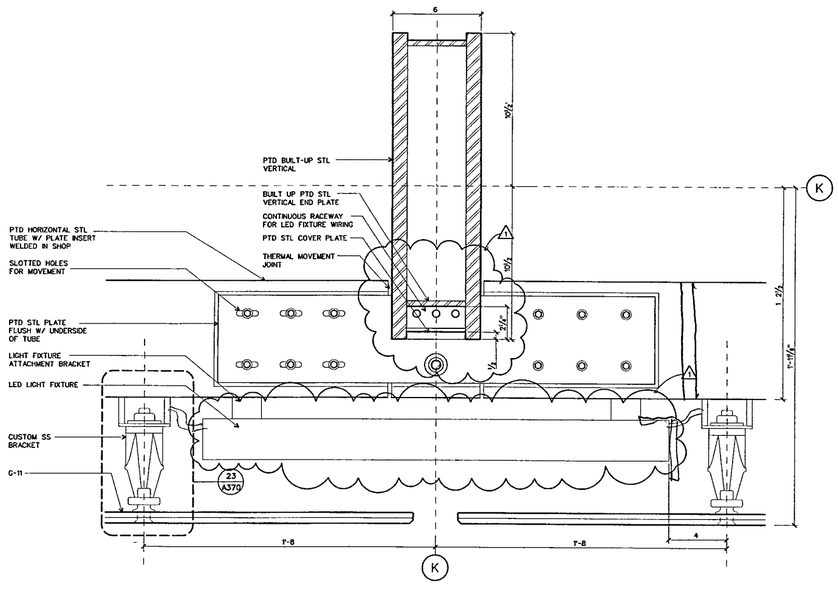

WALL SYSTEM E REFLECTED PLAN DETAIL AT VERTICAL 12
SCALE 3 = 1-0 D-CWDE04

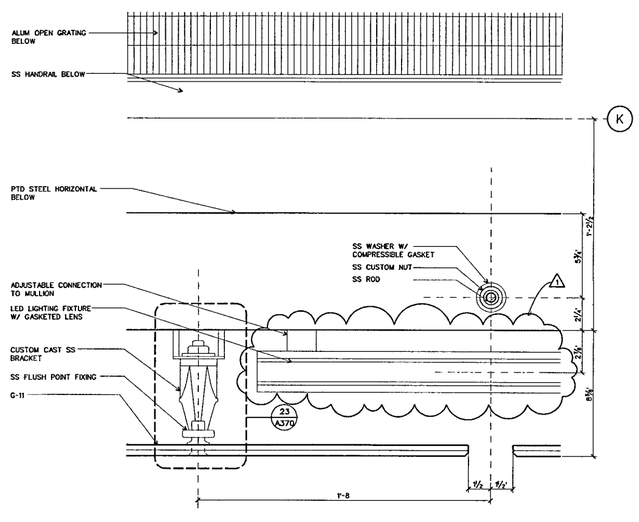

WALL SYSTEM E: PLAN DETAIL AT BRACKET 11
SCALE 3 " = 1'-0" D-CWDE04

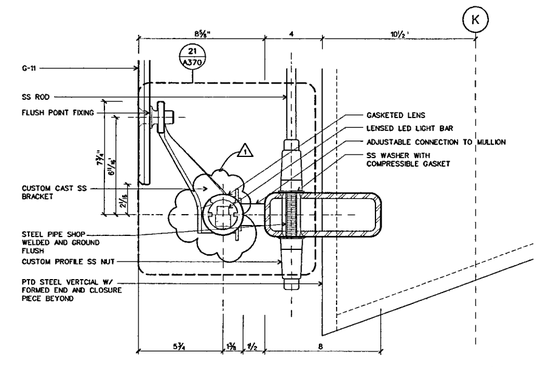

WALL SYSTEM E: SECTION AT BOTTOM HORIZONTAL 10
SCALE 3 = 1-0 D-CWDE04

WILLIAM J CLINTON PRESIDENTIAL CENTER

LITTLE ROCK, ARKANSAS

Architect

POLSHEK PARTNERSHIP LLP
320 West 13th Street
New York, New York 10014
212 807 7171

Coordinating Architects

POLK STANLEY YEARY ARCHITECTS Ltd
700 South Schiller Street
Little Rock Arkansas 72201
501 378 0878

WITSELL EVANS RASCO
901 West Third Street
Little Rock, Arkansas 72201
501 374.5300

WOODS CARADINE ARCHITECTS
2200 South Main Street
Little Rock, Arkansas 72206
501 374.4060

Landscape Architects

HARGREAVES ASSOCIATES
118 Magazine Street
Cambridge Massachusettes 02139
617 661 0070

LANDSCAPE ARCHITECTURE, Inc.
2300 Cottondale Lane Suite 202
Little Rock, Arkansas 72202
501 374 5610

Structural Engineer

LESLIE E. ROBERTSON ASSOC RLLP
30 Broad Street, 47th Floor
New York New York 10004
212.750 9000

MEP Engineers

FLACK + KURTZ Inc.
475 Fifth Avenue
New York, New York 10017
212.532.9600

CROMWELL ARCHITECTS ENGINEERS
101 South Spring Street
Little Rock, Arkansas 72201
501 372.2900

Curtainwall Consultant

R. A. HEINTGES ARCHITECTS
126 Fifth Avenue, 9th Floor
New York New York 10011
212.652-2968

Seal

RICHARD OLCOTT
REGISTERED ARCHITECT
3405
ARKANSAS

Issue	Date
1 100% Construction Documents	09/27/02
90% Progress Printing	08/30/02
100% Struct./ CD Progress	07/01/02
100% Design Development	03/01/02

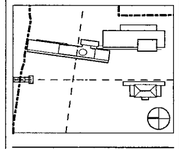

Job No 9908

Scale AS NOTED

Date September 27, 2002

Title
WALL SYSTEM E
PLAN AND SECTION DETAILS

Sheet No
A369

FOR OFFICIAL USE ONLY

97

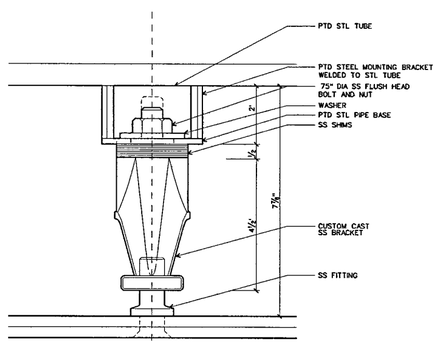

WALL SYSTEM E: BRACKET, PLAN DETAIL (23)
SCALE 6" = 1'-0" D-CWDE05

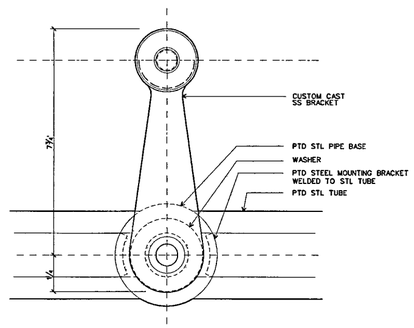

WALL SYSTEM E: BRACKET, FRONT ELEVATION (22)
SCALE 6" = 1'-0" D-CWDE05

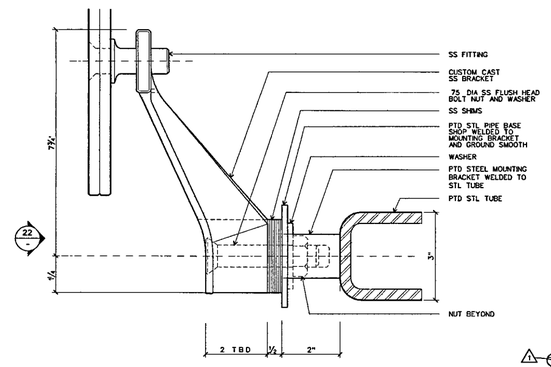

WALL SYSTEM E: BRACKET, SIDE ELEVATION (21)
SCALE 6" = 1'-0" D-CWDE05

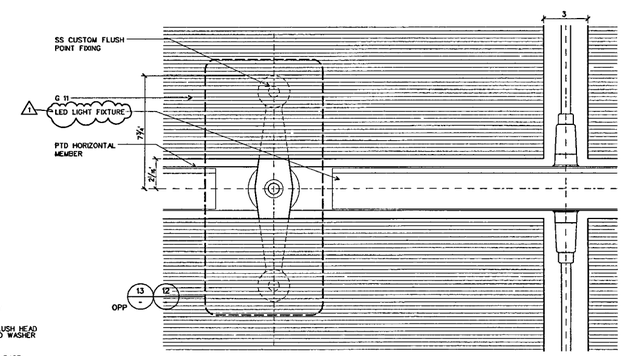

WALL SYSTEM E: ELEVATION DETAIL (20)
SCALE 3" = 1'-0" D-CWDE05

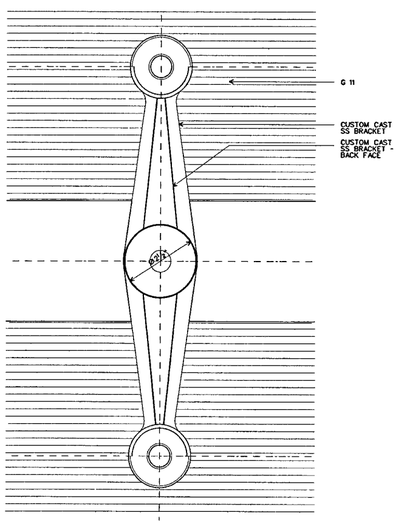

WALL SYSTEM E: BRACKET, BACK ELEVATION (13)
SCALE 6" = 1'-0" D-CWDE05

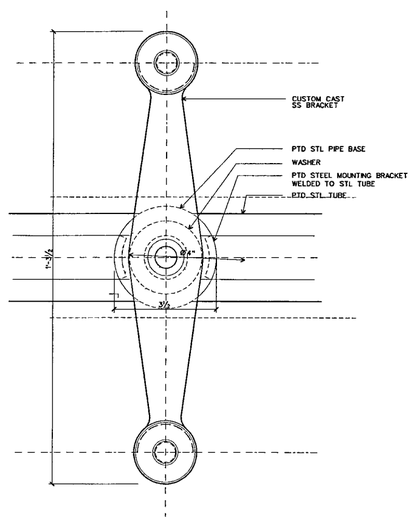

WALL SYSTEM E: BRACKET FRONT ELEVATION (12)
SCALE 6" = 1'-0" D-CWDE05

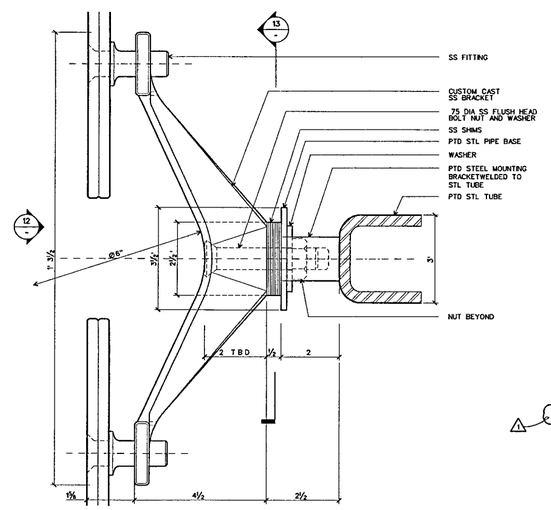

WALL SYSTEM E: BRACKET, SIDE ELEVATION (11)
SCALE 6" = 1'-0" D-CWDE05

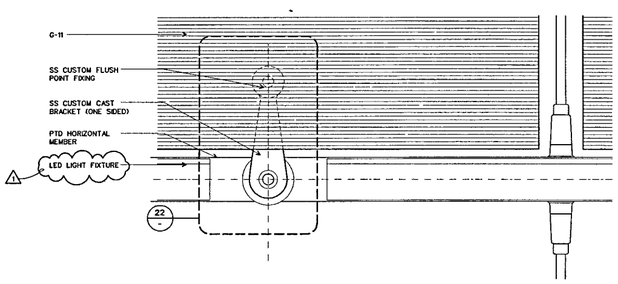

WALL SYSTEM E: ELEVATION DETAIL (10)
SCALE 3" = 1'-0" D-CWDE05

WILLIAM J CLINTON PRESIDENTIAL CENTER

LITTLE ROCK, ARKANSAS

Architect

POLSHEK PARTNERSHIP LLP
320 West 13th Street
New York, New York 10014
212.807 7171

Coordinating Architects

POLK STANLEY YEARY ARCHITECTS Ltd
700 South Schiller Street
Little Rock, Arkansas 72201
501 378 0878

WITSELL EVANS RASCO
901 West Third Street
Little Rock, Arkansas 72201
501 374.5300

WOODS CARADINE ARCHITECTS
2200 South Main Street
Little Rock, Arkansas 72206
501 374 4060

Landscape Architects

HARGREAVES ASSOCIATES
118 Magazine Street
Cambridge Massachusettes 02139
617 661 0070

LANDSCAPE ARCHITECTURE Inc.
2300 Cottondale Lane Suite 202
Little Rock, Arkansas 72202
501 374 5610

Structural Engineer

LESLIE E ROBERTSON ASSOC., RLLP
30 Broad Street, 47th Floor
New York, New York 10004
212.750 9000

MEP Engineers

FLACK + KURTZ Inc.
475 Fifth Avenue
New York, New York 10017
212 532.9600

CROMWELL ARCHITECTS ENGINEERS
101 South Spring Street
Little Rock, Arkansas 72201
501 372.2900

Curtainwall Consultant

R. A. HEINTGES ARCHITECTS
126 Fifth Avenue 9th Floor
New York, New York 10011
212 652-2966

Seal

Issue	Date
100% Construction Documents	09/27/02
90% Progress Printing	08/30/02
100% Struct./ CD Progress	07/01/02
100% Design Development	03/01/02

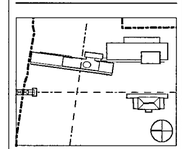

Job No 9908

Scale AS NOTED

Date September 27, 2002

Title WALL SYSTEM E PLAN AND SECTION DETAILS

Sheet No A370

FOR OFFICIAL USE ONLY

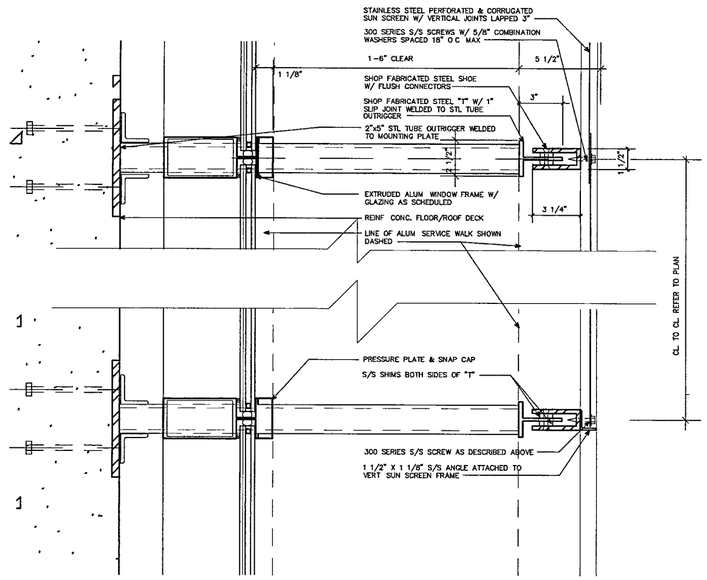

WALL SYSTEM F· DETAIL AT VERT MULL (21)

SCALE. 3" = 1'-0"

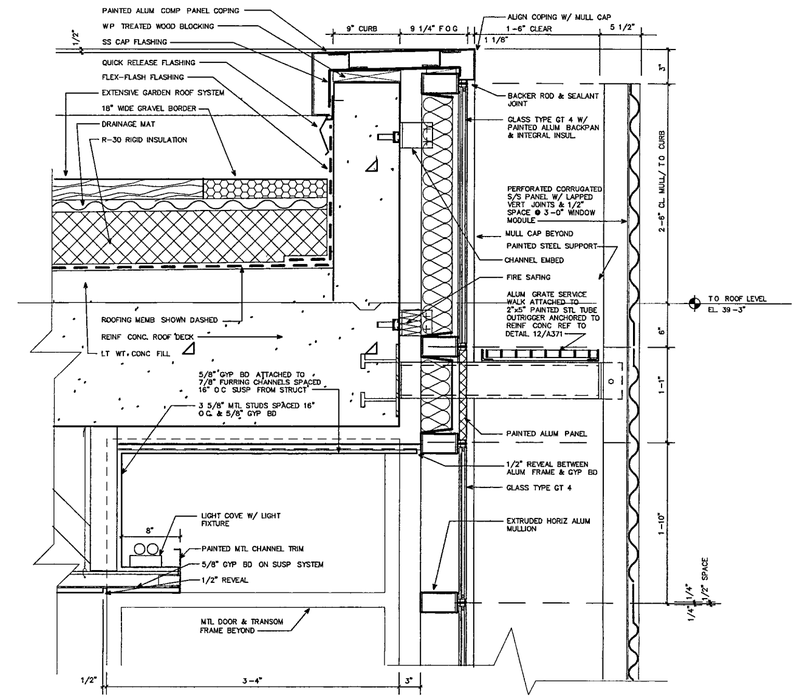

WALL SYSTEM F: DETAIL AT ROOF (20)

SCALE. 1-1/2 " = 1'-0"

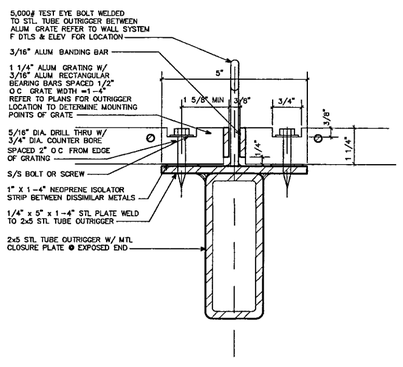

SERVICE WALK ATTACHMENT DETAIL (12)

SCALE. 6" = 1'-0"

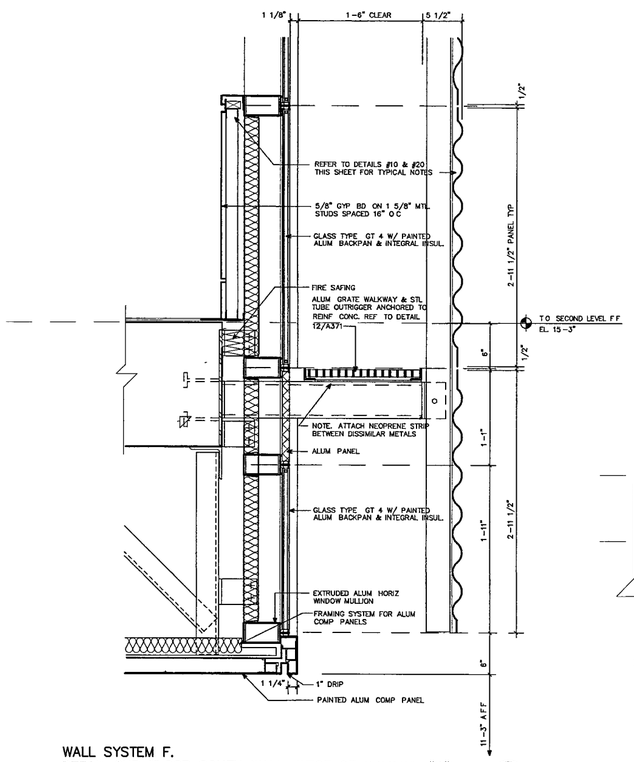

WALL SYSTEM F.
DETAIL 2ND FLOOR SOUTH WALL, WEST OF GRIDLINE "D" (11)

SCALE. 1-1/2 " = 1'-0"

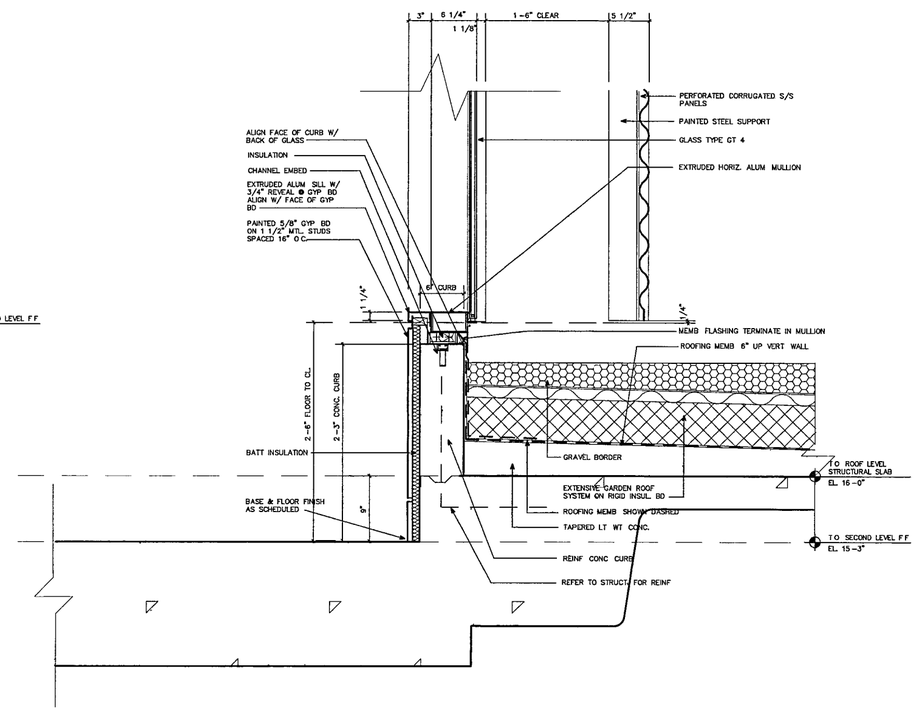

WALL SYSTEM F DETAIL 2ND FLOOR/ROOF EAST (10)

SCALE. 1-1/2 " = 1'-0"

WILLIAM J. CLINTON PRESIDENTIAL CENTER

LITTLE ROCK, ARKANSAS

Architect

POLSHEK PARTNERSHIP LLP
320 West 13th Street
New York, New York 10014
212.807 7171

Coordinating Architects

POLK STANLEY YEARY ARCHITECTS Ltd
700 South Schiller Street
Little Rock, Arkansas 72201
501.378 0878

WITSELL EVANS & RASCO
901 West Third Street
Little Rock, Arkansas 72201
501.374.5300

WOODS CARADINE ARCHITECTS
2200 South Main Street
Little Rock, Arkansas 72206
501.374.4060

Landscape Architects

HARGREAVES ASSOCIATES
118 Magazine Street
Cambridge, Massachusettes 02139
617.661 0070

LANDSCAPE ARCHITECTURE, Inc.
2300 Cottondale Lane Suite 202
Little Rock, Arkansas 72202
501.374.5810

Structural Engineer

LESLIE E. ROBERTSON ASSOC., RLLP
30 Broad Street, 47th Floor
New York, New York 10017
212.750.9000

MEP Engineers

FLACK + KURTZ Inc.
475 Fifth Avenue
New York, New York 10017
212 532.9600

CROMWELL ARCHITECTS ENGINEERS
101 South Spring Street
Little Rock, Arkansas 72201
501.372.2900

Curtainwall Consultant

R.A. HEINTGES ARCHITECTS
126 Fifth Avenue, 9th. Floor
New York, New York 10011
212.652-2966

Seal

Issue	Date
100% Construction Documents	09/27/02
90% Progress Printing	08/30/02

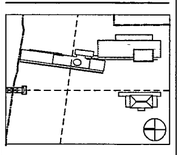

Job No	PPA. 9908 PSY 428D
Scale	AS SHOWN
Date	September 27, 2002

Title

WALL SYSTEM F: SECTIONS

Sheet No

A371

FOR OFFICIAL USE ONLY

THURSDAY SEPTEMBER 26 2002 11 53 AM

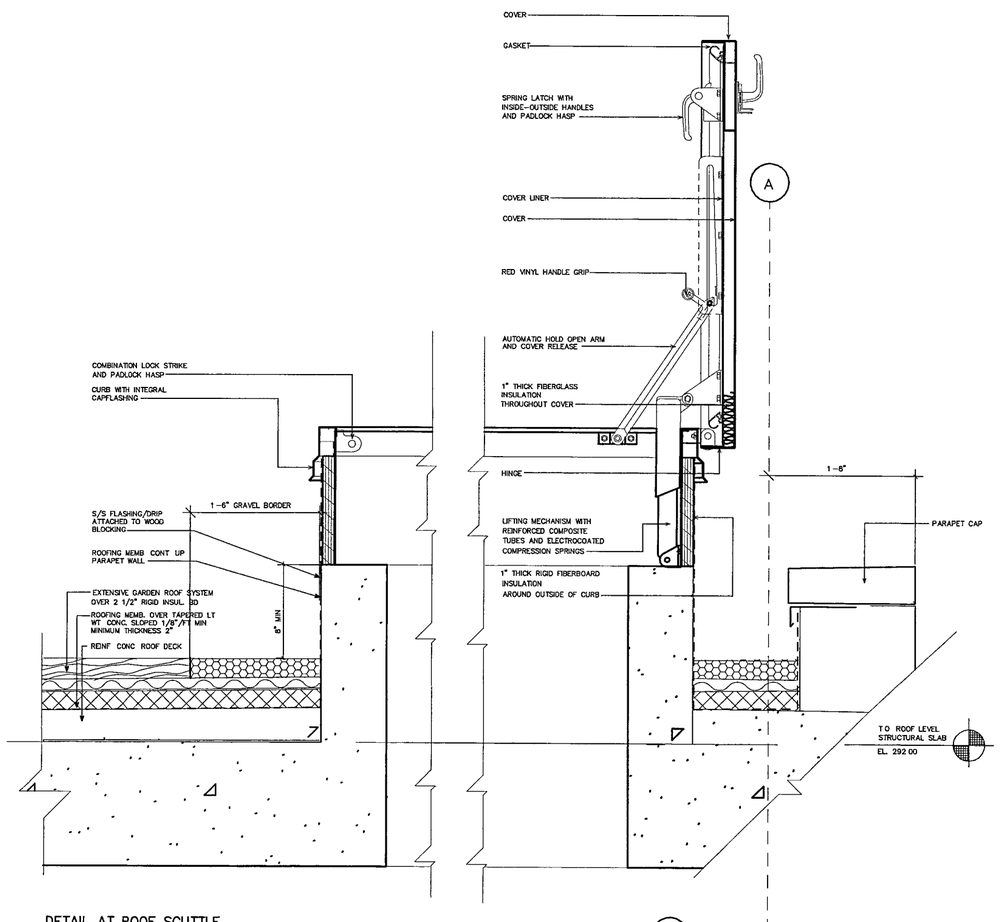

DETAIL AT ROOF SCUTTLE

SCALE. 1-1/2" = 1'-0"

REFER TO SHEET A108a FOR HORIZONTAL DIMENSIONS

11

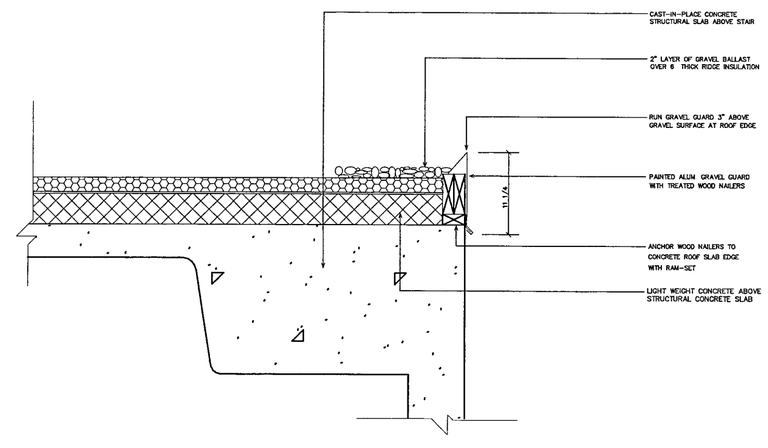

ARCHIVE-BUILDING. ROOF EDGE DETAIL – STAIR #11 PENTHOUSE

SCALE: 1 1/2" = 1'- 0"

REFER TO SECTIONS 10 AND 11 ON SHEET A330

10

WILLIAM J. CLINTON PRESIDENTIAL CENTER

LITTLE ROCK, ARKANSAS

Architect

POLSHEK PARTNERSHIP LLP
320 West 13th Street
New York, New York 10014
212.807 7171

Coordinating Architects

POLK STANLEY YEARY ARCHITECTS Ltd
700 South Schiller Street
Little Rock, Arkansas 72201
501.378.0878

WITSELL EVANS & RASCO
901 West Third Street
Little Rock, Arkansas 72201
501 374 5300

WOODS CARADINE ARCHITECTS
2200 South Main Street
Little Rock, Arkansas 72206
501.374.4060

Landscape Architects

HARGREAVES ASSOCIATES
118 Magazine Street
Cambridge, Massachusettes 02139
617.661 0070

LANDSCAPE ARCHITECTURE, Inc.
2300 Cottondale Lane Suite 202
Little Rock, Arkansas 72202
501.374.5610

Structural Engineer

LESLIE E ROBERTSON ASSOC., RLLP
30 Broad Street, 47th Floor
New York, New York 10017
212 750.9000

MEP Engineers

FLACK + KURTZ Inc.
475 Fifth Avenue
New York, New York 10017
212.532.9600

CROMWELL ARCHITECTS ENGINEERS
101 South Spring Street
Little Rock, Arkansas 72201
501.372.2900

Curtainwall Consultant

R.A. HEINTGES ARCHITECTS
126 Fifth Avenue, 9th Floor
New York, New York 10011
212 652-2966

Seal

Issue	Date
100% Construction Documents	09/27/02

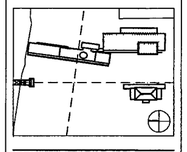

Job No PPA. 9908 PSY 4290

Scale 1 1/2" = 1'-0"

Date September 27, 2002

Title

ARCHIVE BUILDING ROOF DETAILS

Sheet No

A372

FOR OFFICIAL USE ONLY

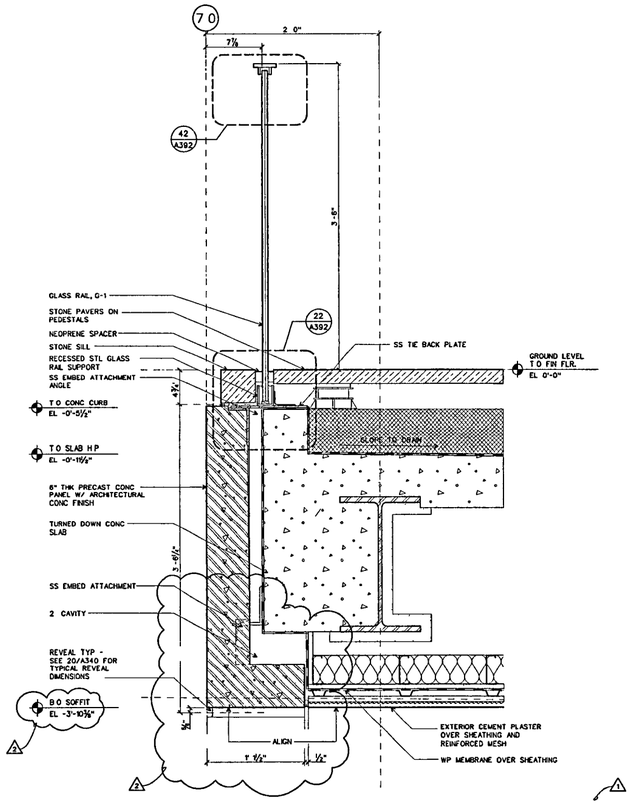

WALL SYSTEM G: DETAIL SECTION AT NORTH TERRACE (22)

SCALE 1-1/2 " = 1'-0 D-CWG02

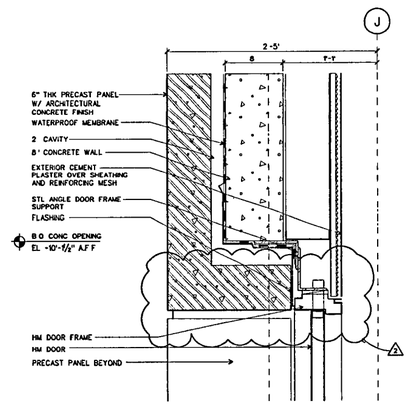

WALL SYSTEM G: DETAIL SECTION AT DOOR HEAD (21)

SCALE 1-1/2 " = 1'-0" D-CWG02

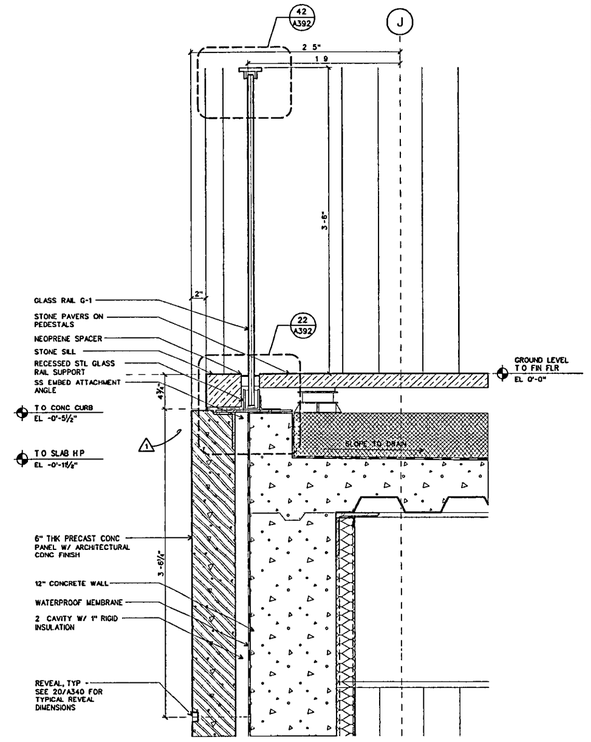

WALL SYSTEM G: DETAIL SECTION AT EAST TERRACE (20)

SCALE 1-1/2 " = 1'-0" D-CWG02

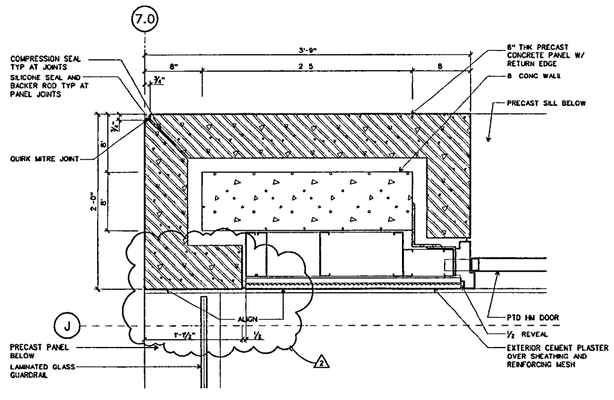

WALL SYSTEM G: PLAN DETAIL AT DOOR JAMB (12)

SCALE 1-1/2 " = 1'-0" D-CWG02

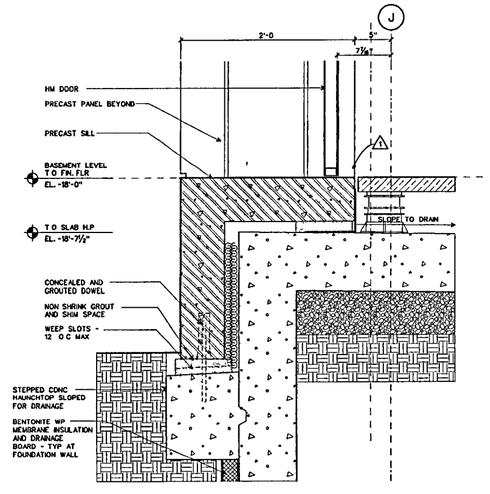

WALL SYSTEM G: DETAIL SECTION AT DOOR SILL (11)

SCALE 1-1/2 " = 1'-0" D-CWG02

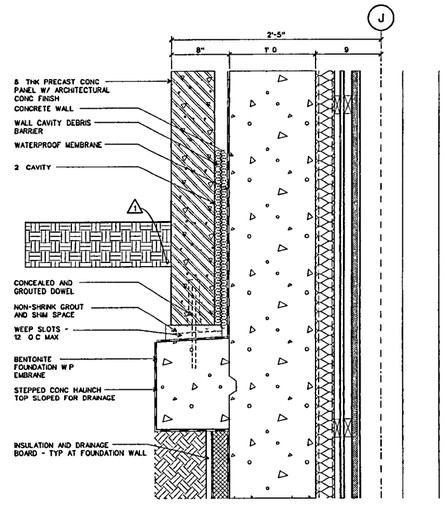

WALL SYSTEM G: DETAIL SECTION AT SILL (10)

SCALE 1-1/2 " = 1'-0" D-CWG02

WILLIAM J CLINTON PRESIDENTIAL CENTER

LITTLE ROCK, ARKANSAS

Architect

POLSHEK PARTNERSHIP LLP
320 West 13th Street
New York, New York 10014
212 807 7171

Coordinating Architects

POLK STANLEY YEARY ARCHITECTS Ltd
700 South Schiller Street
Little Rock, Arkansas 72201
501 378 0878

WITSELL EVANS RASCO
901 West Third Street
Little Rock, Arkansas 72201
501 374 5300

WOODS CARADINE ARCHITECTS
2200 South Main Street
Little Rock Arkansas 72206
501 374 4060

Landscape Architects

HARGREAVES ASSOCIATES
118 Magazine Street
Cambridge, Massachusetts 02139
617 661 0070

LANDSCAPE ARCHITECTURE, Inc.
2300 Cottondale Lane Suite 202
Little Rock, Arkansas 72202
501 374 5810

Structural Engineer

LESLIE E ROBERTSON ASSOC , RLLP
30 Broad Street, 47th Floor
New York, New York 10004
212 750 9000

MEP Engineers

FLACK + KURTZ Inc.
475 Fifth Avenue
New York New York 10017
212 532 9600

CROMWELL ARCHITECTS ENGINEERS
101 South Spring Street
Little Rock, Arkansas 72201
501 372 2900

Curtainwall Consultant

R A. HEINTGES ARCHITECTS
126 Fifth Avenue, 9th Floor
New York, New York 10011
212 652-2966

Seal

Issue	Date
Addendum #2	11/15/02
100% Construction Documents	09/27/02
90% Progress Printing	08/30/02
100% Struct./ CD Progress	07/01/02
Bridge Bldg Substructure	06/14/02
100% Design Development	03/01/02

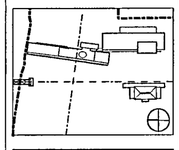

Job No 9908

Scale 1-1/2" = 1'-0"

Date September 27, 2002

Title WALL SYSTEM G DETAIL PLANS AND SECTIONS

Sheet No A375

FOR OFFICIAL USE ONLY

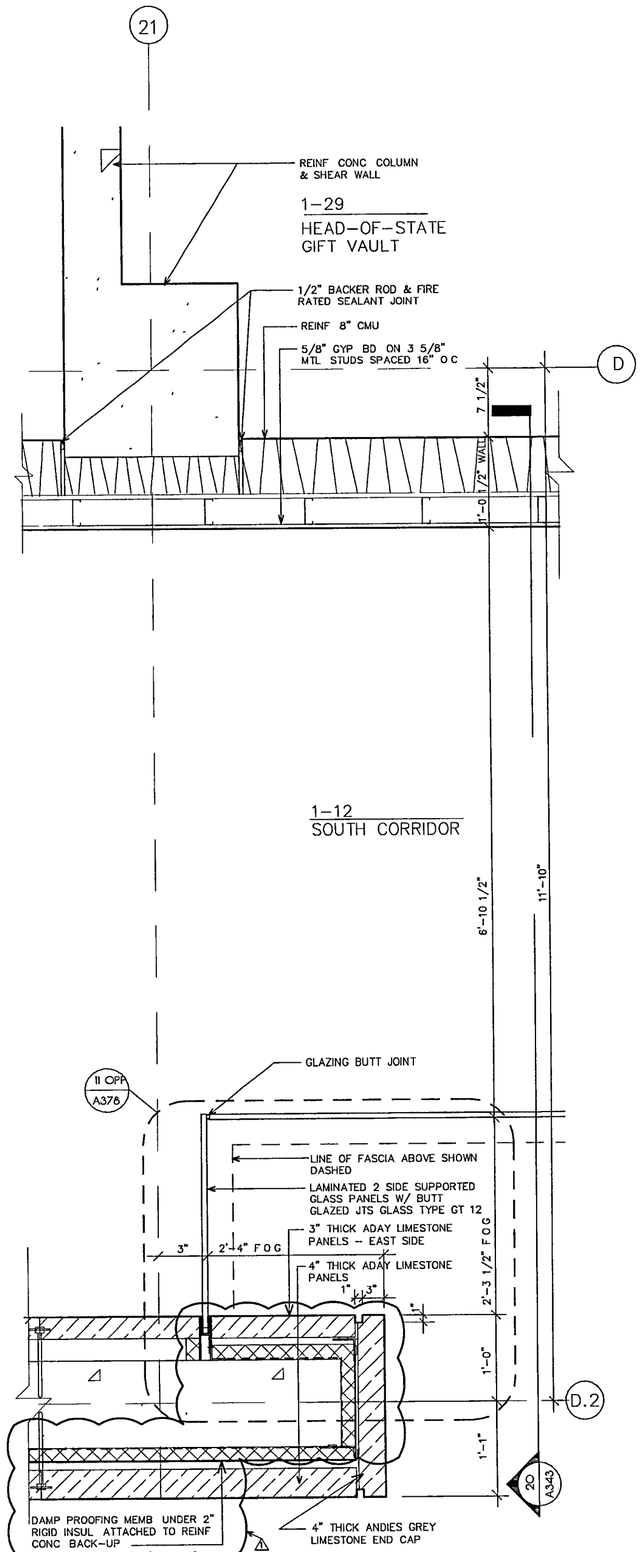

WALL SYSTEM H: DETAILS AT STONE WALL (13)

SCALE. 1–1/2 " = 1'–0"

DETAIL NOT USED (12) (11)

SCALE. 1–1/2 " = 1'–0"

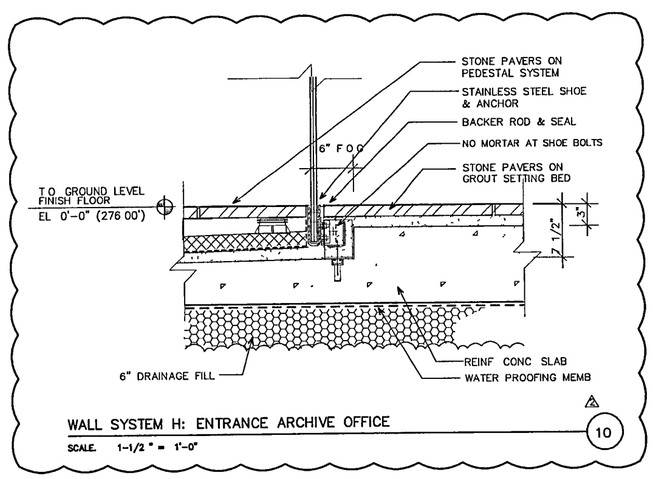

WALL SYSTEM H: ENTRANCE ARCHIVE OFFICE (10)

SCALE. 1–1/2 " = 1'–0"

WILLIAM J. CLINTON PRESIDENTIAL CENTER

LITTLE ROCK, ARKANSAS

Architect

POLSHEK PARTNERSHIP LLP
320 West 13th Street
New York, New York 10014
212.807 7171

Coordinating Architects

POLK STANLEY YEARY ARCHITECTS Ltd
700 South Schiller Street
Little Rock, Arkansas 72201
501.378 0878

WITSELL EVANS & RASCO
901 West Third Street
Little Rock, Arkansas 72201
501.374.5300

WOODS CARADINE ARCHITECTS
2200 South Main Street
Little Rock, Arkansas 72206
501.374.4060

Landscape Architects

HARGREAVES ASSOCIATES
118 Magazine Street
Cambridge, Massachusettes 02139
617 661 0070

LANDSCAPE ARCHITECTURE, Inc.
2300 Cottondale Lane Suite 202
Little Rock, Arkansas 72202
501.374.5610

Structural Engineer

LESLIE E. ROBERTSON ASSOC., RLLP
30 Broad Street, 47th Floor
New York, New York 10017
212.750 9000

MEP Engineers

FLACK + KURTZ Inc.
475 Fifth Avenue
New York, New York 10017
212.532.9600

CROMWELL ARCHITECTS ENGINEERS
101 South Spring Street
Little Rock, Arkansas 72201
501.372.2900

Curtainwall Consultant

R.A. HEINTGES ARCHITECTS
128 Fifth Avenue, 9th Floor
New York, New York 10011
212.652 2966

Seal

POLK STANLEY YEARY ARCHITECTS LTD
CORPORATE SEAL
REGISTRATION C-136
ARKANSAS

Issue	Date
2 Addendum #2	11/15/02
1 Addendum #1	10/23/02
100% Construction Documents	09/27/02
90% Progress Printing	08/30/02
100% Struct/ CD Progress	07/01/02

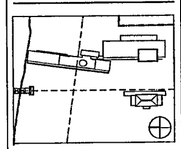

Job No. PPA. 9908 PSY 4260

Scale 1 1/2" = 1'-0"

Date September 27, 2002

Title

WALL SYSTEM H GLASS PLANS & SECTIONS

Sheet No.

A377

FOR OFFICIAL USE ONLY

FRIDAY NOVEMBER 15 2002 12 01 PM

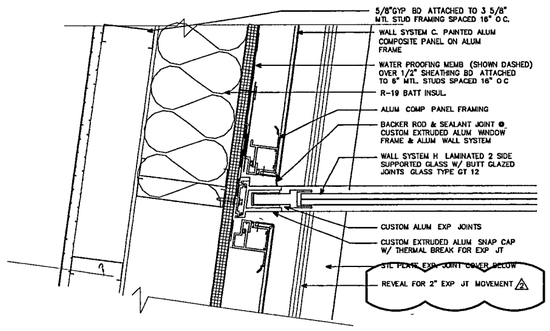

WALL SYSTEM H: PLAN DET. AT WALL SYSTEM C EAST (43)

SCALE. 3" = 1'-0"

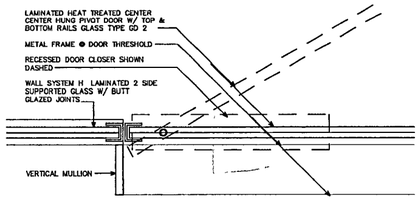

WALL SYSTEM H: PLAN DET. AT GLASS DOOR EAST (42)

SCALE. 3" = 1'-0"

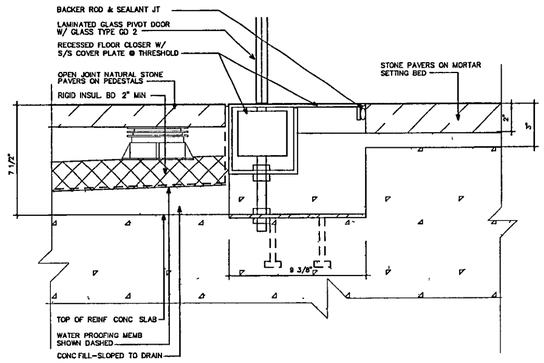

WALL SYSTEM H: DETAIL AT DOOR THRESHOLD (41)

SCALE. 3" = 1'-0"

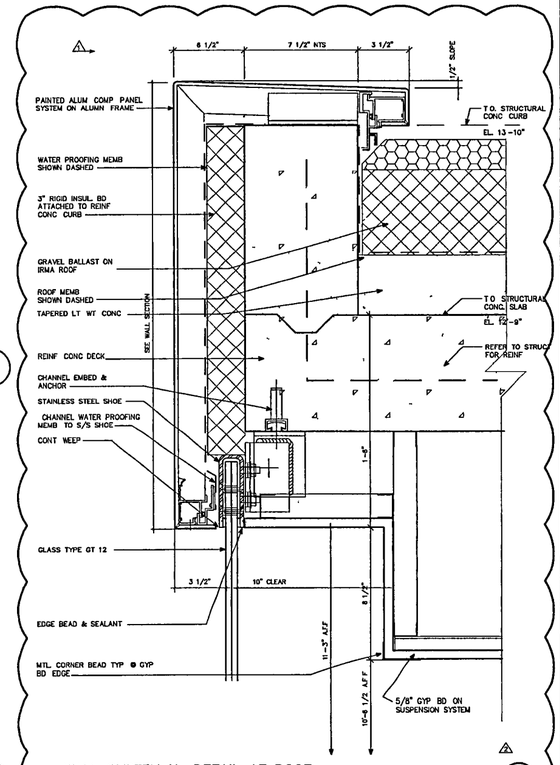

WALL SYSTEM H· DETAIL AT ROOF (30)

SCALE. 3" = 1'-0"

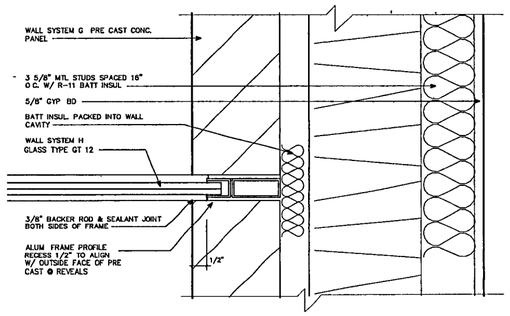

WALL SYSTEM H: PLAN DET. AT WALL SYSTEM G (32)

SCALE. 3" = 1'-0"

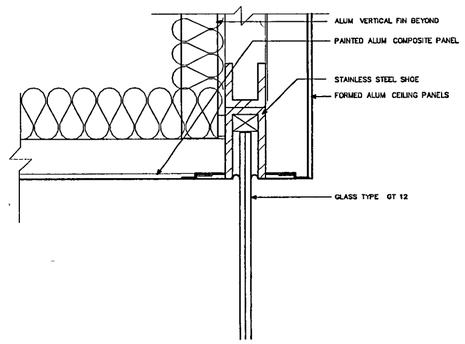

WALL SYSTEM H: TYP. DETAIL HEAD AT ENTRANCE (31)

SCALE. 3" = 1'-0"

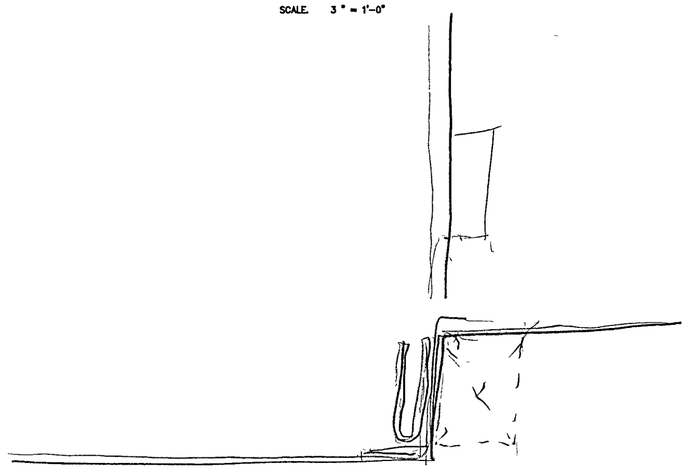

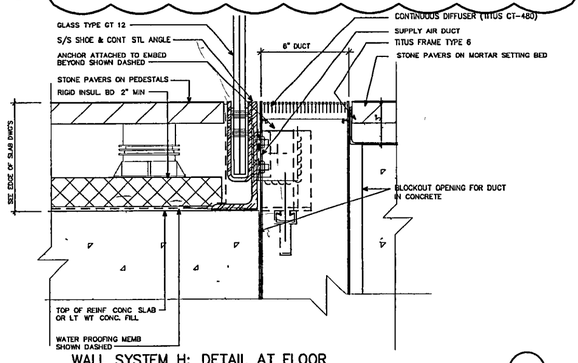

WALL SYSTEM H: DETAIL AT FLOOR (20)

SCALE. 3" = 1'-0"

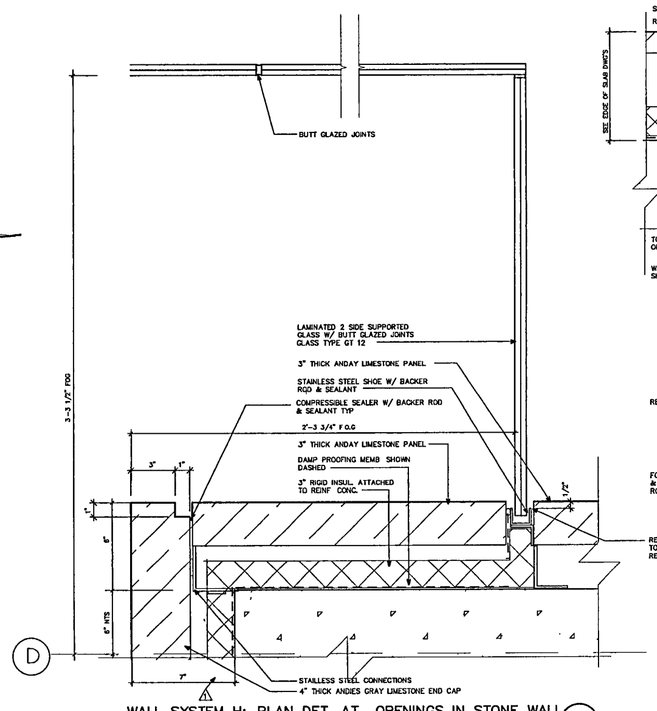

WALL SYSTEM H: PLAN DET. AT OPENINGS IN STONE WALL (11)

SCALE. 3" = 1'-0"

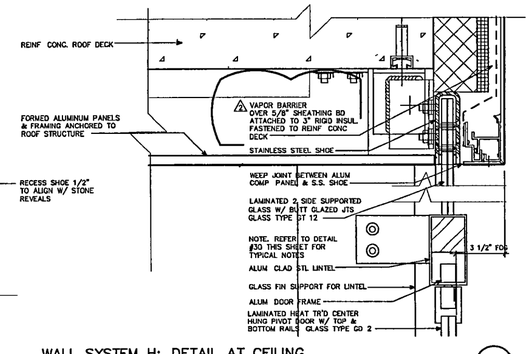

WALL SYSTEM H: DETAIL AT CEILING (10)

SCALE. 3" = 1'-0"

WILLIAM J. CLINTON PRESIDENTIAL CENTER

LITTLE ROCK, ARKANSAS

Architect

POLSHEK PARTNERSHIP LLP
320 West 13th Street
New York, New York 10014
212.807 7171

Coordinating Architects

POLK STANLEY YEARY ARCHITECTS Ltd
700 South Schiller Street
Little Rock, Arkansas 72201
501.378 0878

WITSELL EVANS & RASCO
901 West Third Street
Little Rock, Arkansas 72201
501.374.5300

WOODS CARADINE ARCHITECTS
2200 South Main Street
Little Rock, Arkansas 72206
501 374.4060

Landscape Architects

HARGREAVES ASSOCIATES
118 Magazine Street
Cambridge, Massachusetts 02139
617 661.0070

LANDSCAPE ARCHITECTURE, Inc.
2300 Cottondale Lane Suite 202
Little Rock, Arkansas 72202
501 374 5610

Structural Engineer

LESLIE E ROBERTSON ASSOC., RLLP
30 Broad Street, 47th Floor
New York, New York 10017
212.750 9000

MEP Engineers

FLACK + KURTZ Inc.
475 Fifth Avenue
New York, New York 10017
212.532 9600

CROMWELL ARCHITECTS ENGINEERS
101 South Spring Street
Little Rock, Arkansas 72201
501 372.2900

Curtainwall Consultant

R.A. HEINTGES ARCHITECTS
126 Fifth Avenue, 9th Floor
New York, New York 10011
212 652-2968

Seal

POLK STANLEY YEARY ARCHITECTS CORPORATION REGISTRATION C-136 ARKANSAS

Issue	Date
ADDENDUM #2	11/15/02
ADDENDUM #1	10/23/02
100% Construction Documents	09/27/02
90% Progress Printing	08/30/02
100% Struct./CD Progress	07/01/02
100% Steel & Concrete CD	
& Architectral CD Progress	05/15/02
100% Design Development	03/01/02

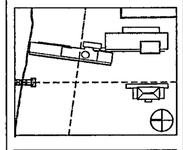

Job No: PPA. 9908 / PSY 426D

Scale: 3" = 1'-0"

Date: September 27, 2002

Title: **WALL SYSTEM H GLASS: PLAN & SECTION DETAILS**

Sheet No: **A378**

FOR OFFICIAL USE ONLY

FRIDAY, NOVEMBER 15, 2002 12 03 PM

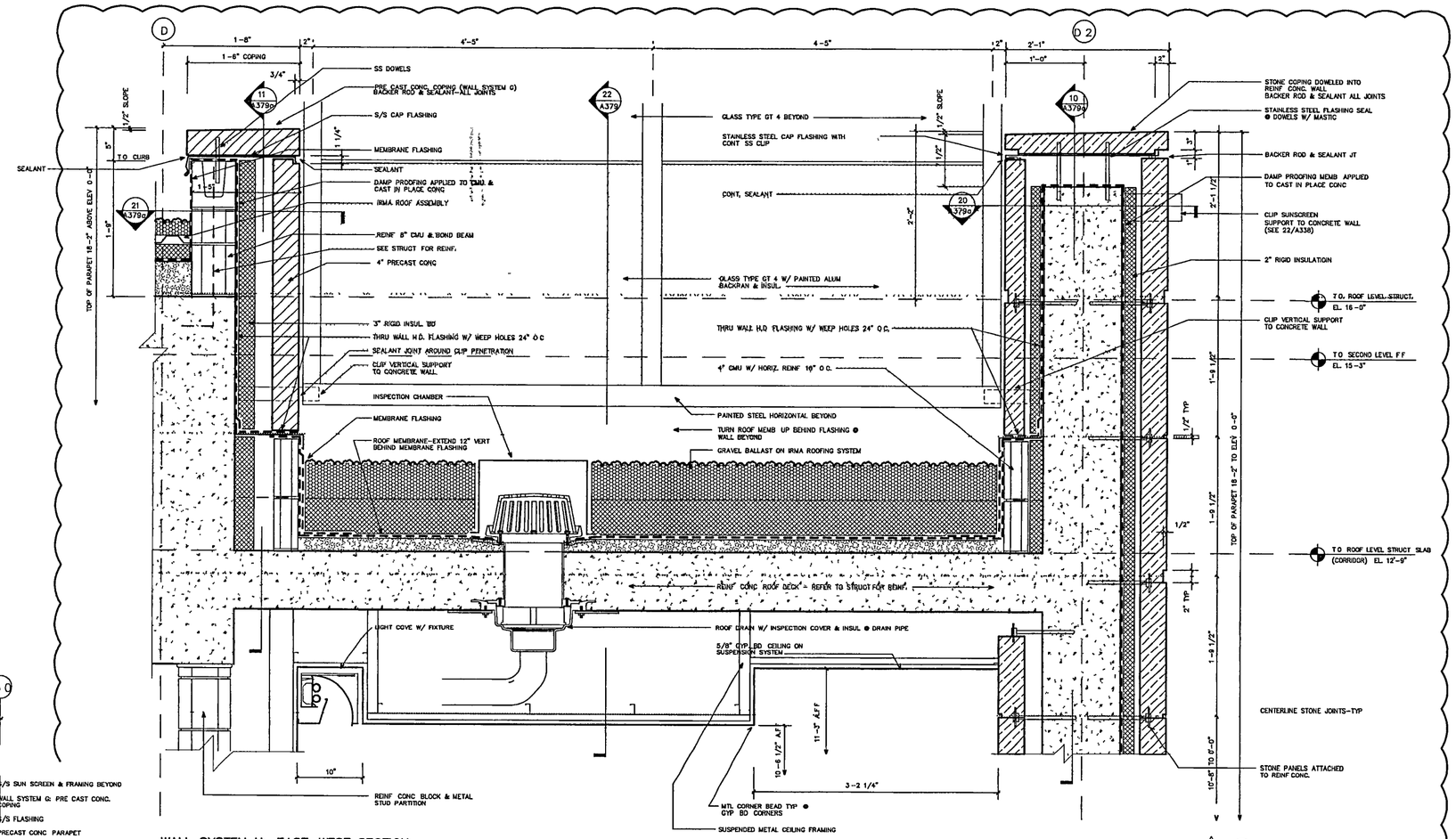

WALL SYSTEM H: EAST-WEST SECTION

SCALE. 1-1/2" = 1'-0"

22

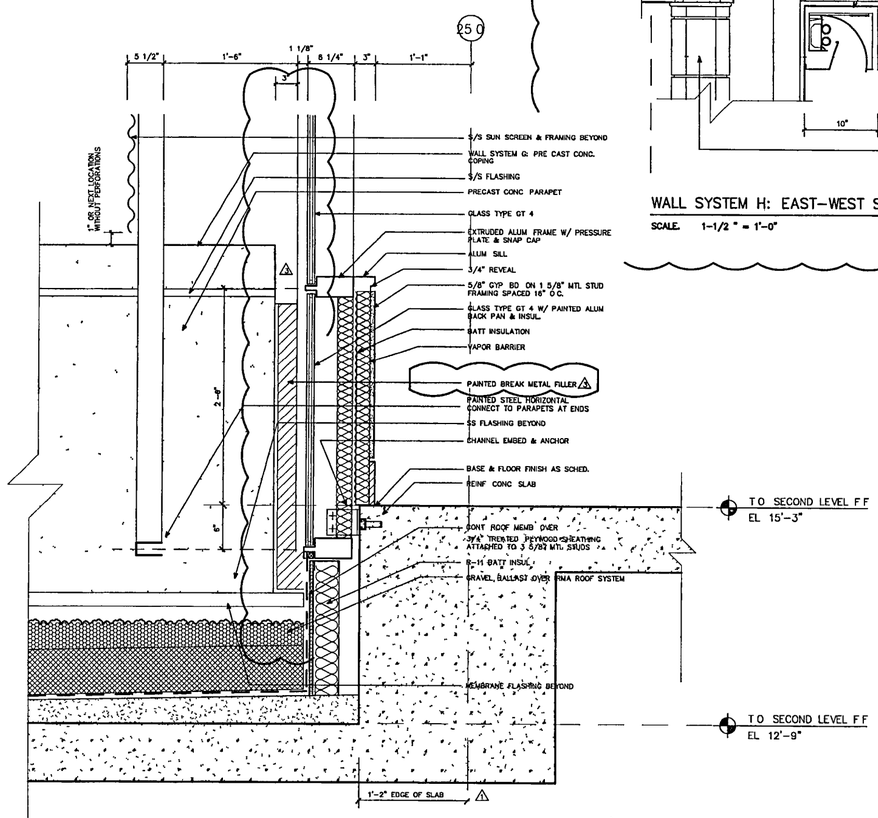

WALL SYSTEM H: SECTION AT WALL SYSTEM F

SCALE. 1-1/2" = 1'-0"

12

MONDAY DECEMBER 02 2002 10 31 AM

WILLIAM J. CLINTON PRESIDENTIAL CENTER

LITTLE ROCK, ARKANSAS

Architect

POLSHEK PARTNERSHIP LLP
320 West 13th Street
New York, New York 10014
212.807 7171

Coordinating Architects

POLK STANLEY YEARY ARCHITECTS Ltd
700 South Schiller Street
Little Rock, Arkansas 72201
501.378 0878

WITSELL EVANS & RASCO
501 West Third Street
Little Rock, Arkansas 72201
501.374.5300

WOODS CARADINE ARCHITECTS
2200 South Main Street
Little Rock, Arkansas 72206
501.374.4060

Landscape Architects

HARGREAVES ASSOCIATES
118 Magazine Street
Cambridge, Massachusetts 02139
617 661.0070

LANDSCAPE ARCHITECTURE, Inc.
2300 Cottondale Lane Suite 202
Little Rock, Arkansas 72202
501.374 5610

Structural Engineer

LESLIE E ROBERTSON ASSOC., RLLP
30 Broad Street, 47th Floor
New York, New York 10017
212 750 9000

MEP Engineers

FLACK + KURTZ Inc.
475 Fifth Avenue
New York, New York 10017
212.532.9600

CROMWELL ARCHITECTS ENGINEERS
101 South Spring Street
Little Rock, Arkansas 72201
501.372.2900

Curtainwall Consultant

R.A. HEINTGES ARCHITECTS
126 Fifth Avenue, 8th Floor
New York, New York 10011
212 652-2966

Seal

POLK STANLEY YEARY ARCHITECTS REGISTRATION NO. C-136 ARKANSAS

Issue	Date
3 Addendum 04	11/22/02
2 Addendum 02	11/15/02
1 Addendum 01	10/23/02
100% Construction Documents	09/27/02
90% Progress Printing	08/30/02
100% Struct/ CD Progress	07/01/02
100% Steel & Concrete CD & Architectural CD Progress	05/15/02
100% Design Development	03/01/02

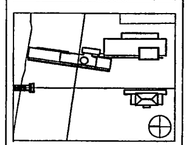

Job No PPA. 9908 PSY 429D

Scale 1 1/2" = 1'-0"

Date September 27, 2002

Title

SYSTEM F&H: PLAN & SECTIONS

Sheet No

A379

FOR OFFICIAL USE ONLY

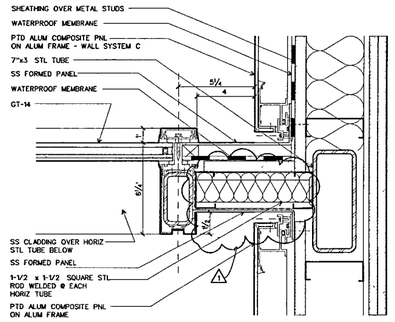

WALL SYSTEM J: PLAN SECTION AT METAL PANEL (43)
SCALE 3 " = 1'-0" D-CWJ01

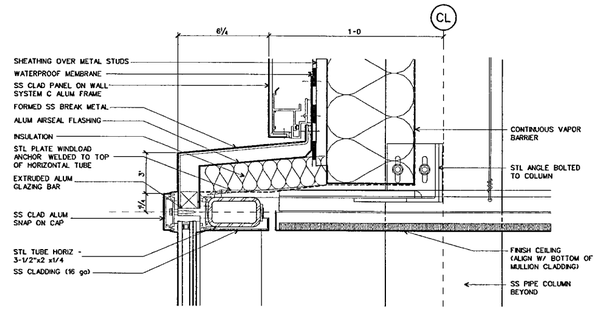

WALL SYSTEM J DETAIL SECTION AT HEAD (42)
SCALE 3 " = 1'-0" D-CWJ01

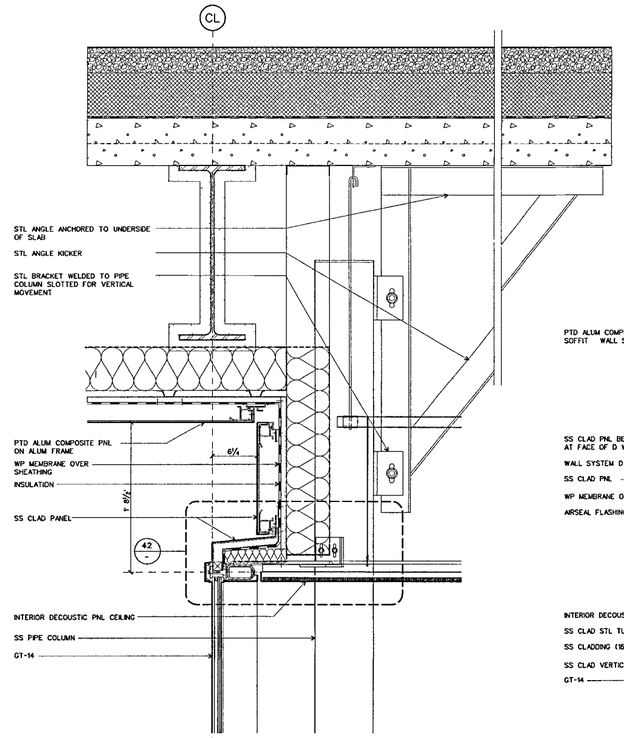

WALL SYSTEM J: DETAIL SECTION AT HEAD (31)
SCALE 1-1/2 " = 1-0 D-CWJ01

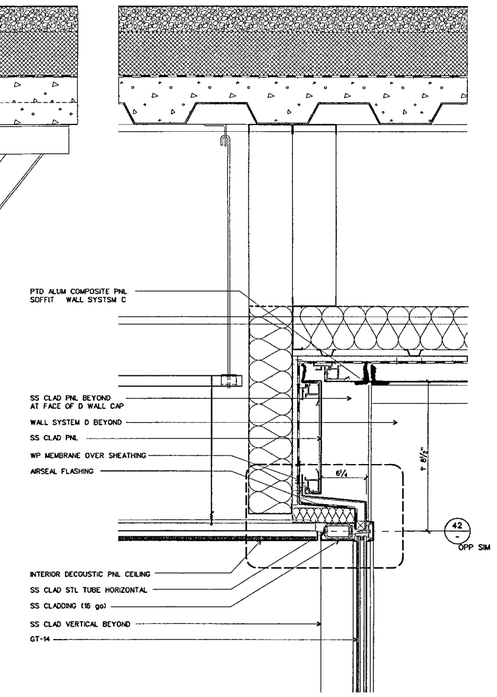

WALL SYSTEM J: DETAIL SECTION AT HEAD (30)
SCALE 1-1/2 " = 1'-0 D-CWJ01

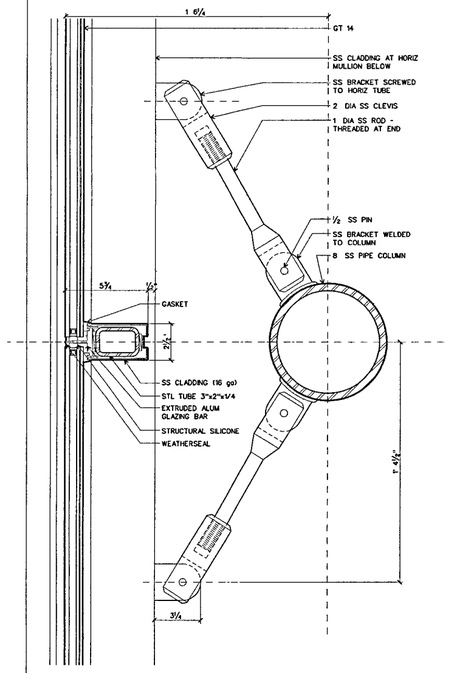

WALL SYSTEM J: PLAN DETAIL AT PIPE COLUMN (23)
SCALE 3 " = 1'-0" D-CWJ01

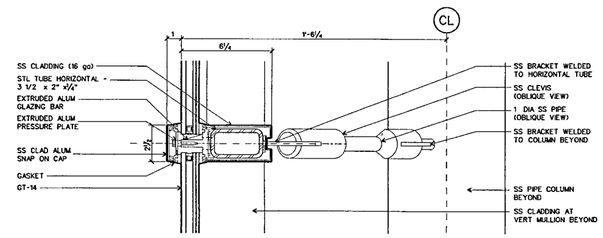

WALL SYSTEM J: DETAIL SECTION AT HORIZONTAL (32)
SCALE 3 " = 1'-0" D-CWJ01

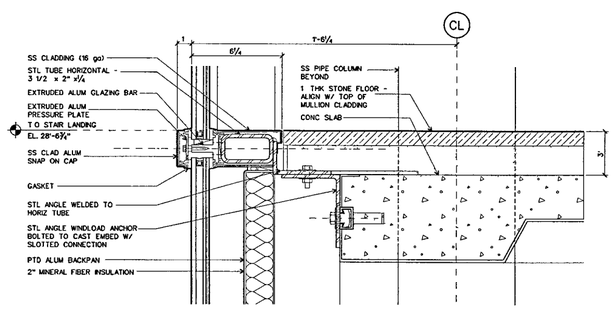

WALL SYSTEM J: DETAIL AT STAIR PLATFORM (22)
SCALE 3" 1'-0" D-CWJ01

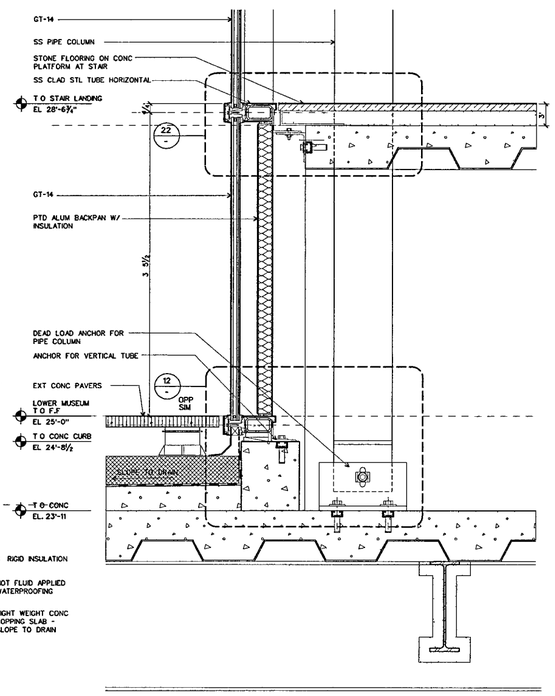

WALL SYSTEM J: DETAIL SECTION AT SILL (11)
SCALE 1-1/2 " = 1'-0" D-CWJ01

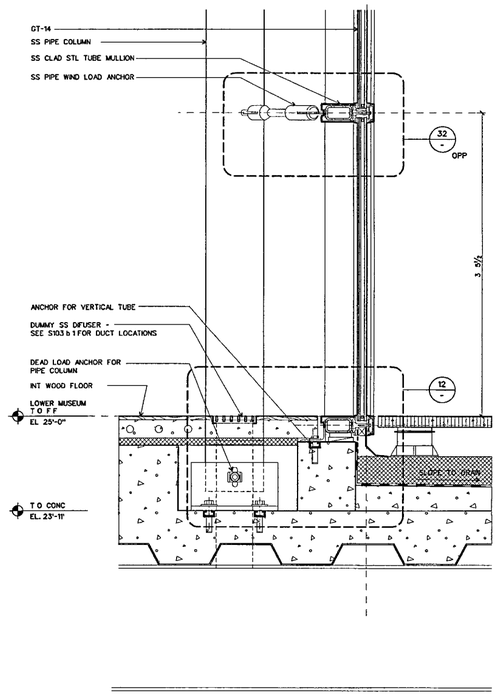

WALL SYSTEM J: DETAIL SECTION AT SILL (10)
SCALE 1-1/2 " = 1'-0" D-CWJ01

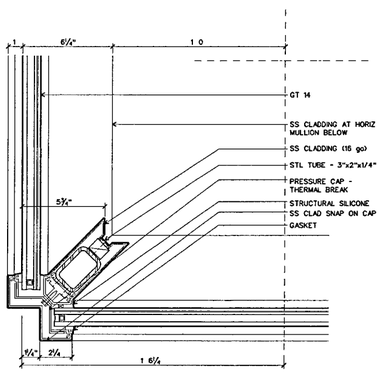

WALL SYSTEM J: PLAN DETAIL AT CORNER (13)
SCALE 3 " = 1-0 D-CWJ01

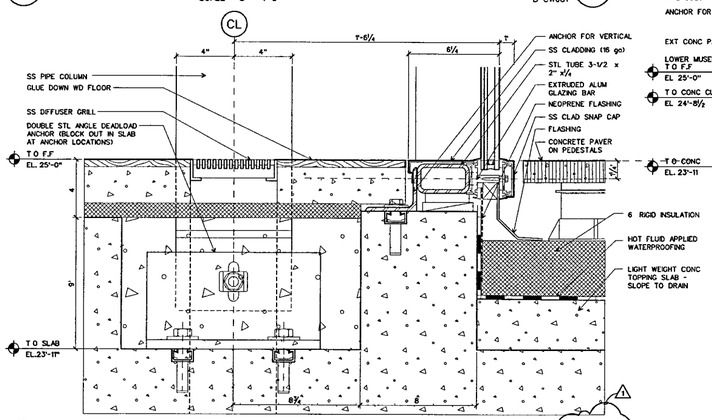

WALL SYSTEM J: SECTION DETIAL AT NORTH SILL (12)
SCALE 3 " = 1'-0 D-CWJ01

WILLIAM J CLINTON PRESIDENTIAL CENTER

LITTLE ROCK, ARKANSAS

Architect
POLSHEK PARTNERSHIP LLP
320 West 13th Street
New York, New York 10014
212 807 7171

Coordinating Architects
POLK STANLEY YEARY ARCHITECTS Ltd
700 South Schiller Street
Little Rock, Arkansas 72201
501.378 0878

WITSELL EVANS RASCO
901 West Third Street
Little Rock, Arkansas 72201
501.374 5300

WOODS CARADINE ARCHITECTS
2200 South Main Street
Little Rock, Arkansas 72206
501 374 4060

Landscape Architects
HARGREAVES ASSOCIATES
118 Magazine Street
Cambridge Massachusetts 02139
617 661 0070

LANDSCAPE ARCHITECTURE Inc
2300 Cottonisle Lane Suite 202
Little Rock, Arkansas 72202
501 374 5610

Structural Engineer
LESLIE E. ROBERTSON ASSOC., RLLP
30 Broad Street, 47th Floor
New York, New York 10004
212.750 9000

MEP Engineers
FLACK + KURTZ Inc
475 Fifth Avenue
New York, New York 10017
212.532 9600

CROMWELL ARCHITECTS ENGINEERS
101 South Spring Street
Little Rock, Arkansas 72201
501 372.2900

Curtainwall Consultant
R. A. HEINTGES ARCHITECTS
126 Fifth Avenue, 9th Floor
New York, New York 10011
212 652-2966

Seal

RICHARD OLCOTT REGISTERED ARCHITECT 3405 ARKANSAS

Issue	Date
100% Construction Documents	09/27/02
90% Progress Printing	08/30/02
100% Struct./ CD Progress	07/01/02
100% Design Development	03/01/02

Job No 9908

Scale AS NOTED

Date September 27, 2002

Title WALL SYSTEM J DETAILS

Sheet No A380

FOR OFFICIAL USE ONLY

45

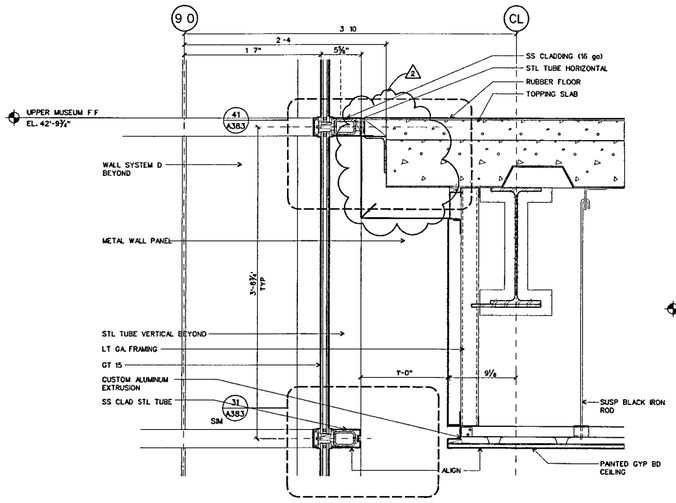

WALL SYSTEM K: SECTION AT UPPER MUSEUM SILL (22)

SCALE 1-1/2 = 1-0 D-CWK01

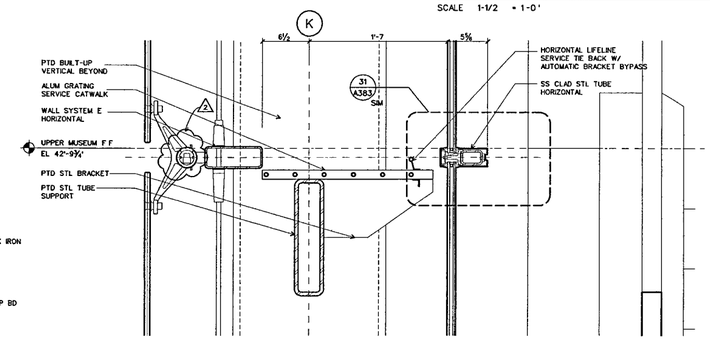

WALL SYSTEM K: SECTION AT UPPER MUSEUM SILL (21)

SCALE 1-1/2 = 1-0 D-CWK01

WALL SYSTEM K: DETAIL SECTION AT NORTH SILL (12)

SCALE 1-1/2 " = 1'-0" D-CWK01

WALL SYSTEM K DETAIL SECTION AT WEST SILL (11)

SCALE 1-1/2 " = 1'-0" D-CWK01

WALL SYSTEM K: DETAIL SECTION AT DOOR SILL (10)

SCALE 1-1/2 " = 1'-0" D-CWK01

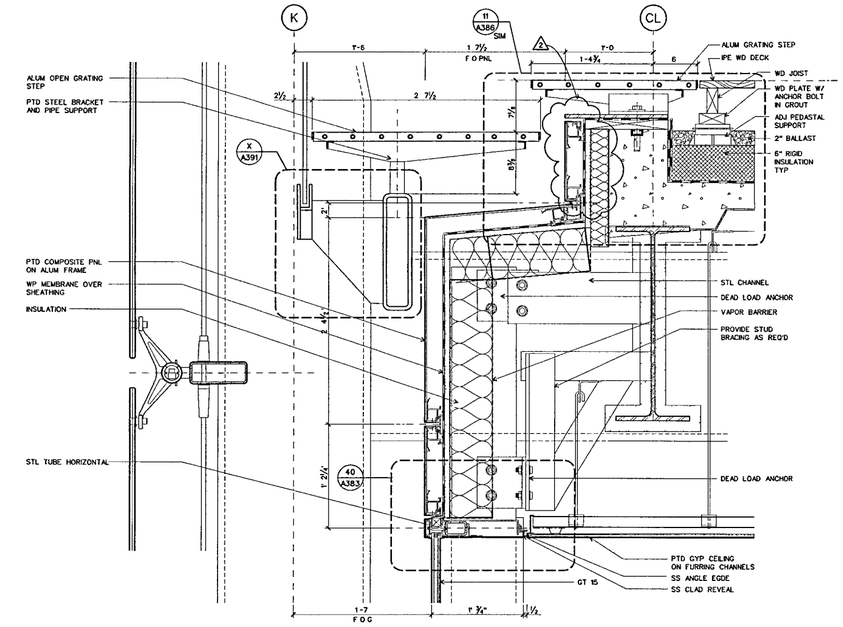

WALL SYSTEM K: DETAIL SECTION AT WEST HEAD (31)

SCALE 1-1/2 = 1-0' D-CWK01

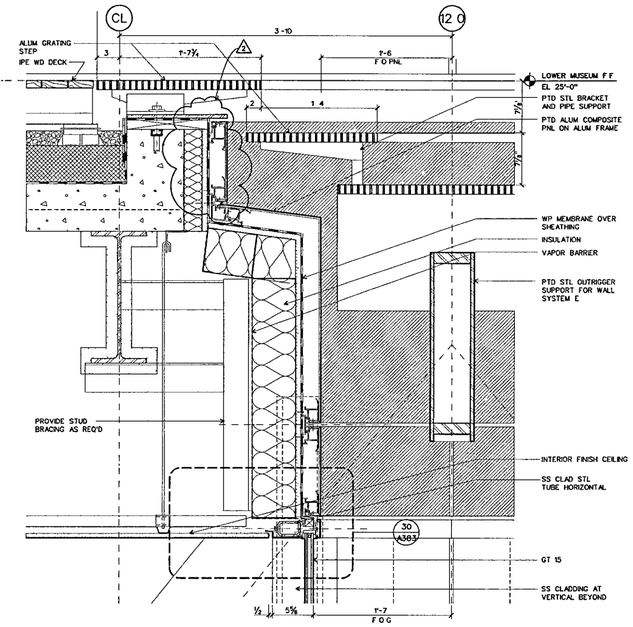

WALL SYSTEM K: DETAIL SECTION AT SOUTH HEAD (30)

SCALE 1-1/2 " = 1'-0" D-CWK01

WILLIAM J CLINTON PRESIDENTIAL CENTER

LITTLE ROCK, ARKANSAS

Architect

POLSHEK PARTNERSHIP LLP
320 West 13th Street
New York, New York 10014
212 807 7171

Coordinating Architects

POLK STANLEY YEARY ARCHITECTS Ltd
700 South Schiller Street
Little Rock Arkansas 72201
501 378 0878

WITSELL EVANS RASCO
901 West Third Street
Little Rock Arkansas 72201
501 374 5300

WOODS CARADINE ARCHITECTS
2200 South Main Street
Little Rock, Arkansas 72206
501 374 4060

Landscape Architects

HARGREAVES ASSOCIATES
118 Magazine Street
Cambridge Massachusettes 02139
617 661 0070

LANDSCAPE ARCHITECTURE Inc.
2300 Cottondale Lane Suite 202
Little Rock, Arkansas 72202
501 374 5610

Structural Engineer

LESLIE E. ROBERTSON ASSOC., RLLP
30 Broad Street, 47th Floor
New York, New York 10004
212.750 9000

MEP Engineers

FLACK + KURTZ Inc.
475 Fifth Avenue
New York, New York 10017
212.532 9600

CROMWELL ARCHITECTS ENGINEERS
101 South Spring Street
Little Rock Arkansas 72201
501 372 2900

Curtainwall Consultant

R. A. HEINTGES ARCHITECTS
126 Fifth Avenue, 9th Floor
New York, New York 10011
212 652-2966

Seal

Issue	Date
2 100% Construction Documents	09/27/02
1 90% Progress Printing	08/30/02
100% Struct./ CD Progress	07/01/02
100% Design Development	03/01/02

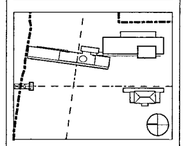

Job No 9908

Scale 1-1/2" = 1'-0"

Date September 27 2002

Title

WALL SYSTEMS K DETAIL SECTIONS

Sheet No

A382

FOR OFFICIAL USE ONLY

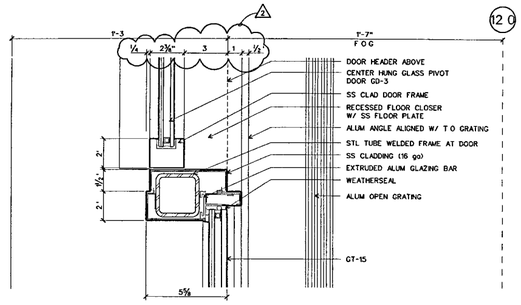

WALL SYSTEM K: PLAN DETAIL AT DOOR JAMB (32)
SCALE 3 = 1-0' D-CWK02

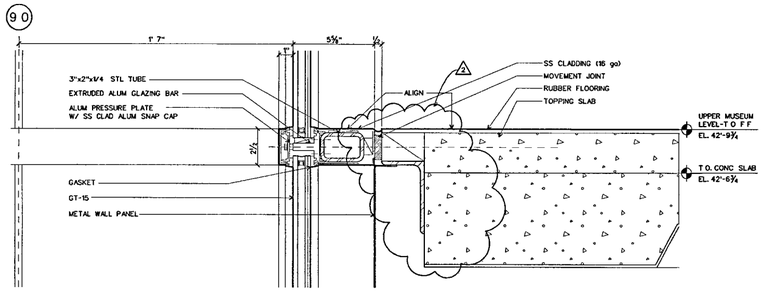

WALL SYSTEM K· SECTION DETAIL AT SILL (41)
SCALE 3 = 1-0 D-CWK02

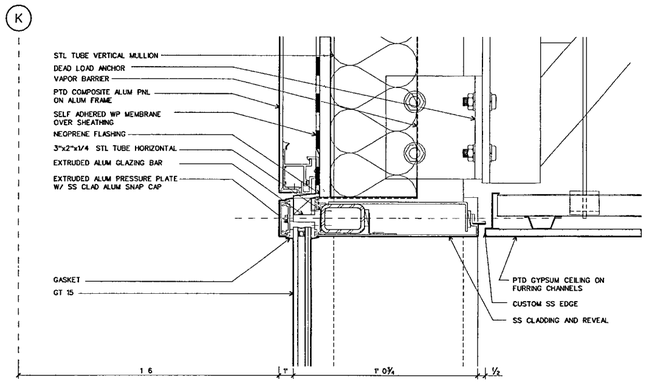

WALL SYSTEM K· SECTION DETAIL AT HEAD (40)
SCALE 3 ' = 1'-0 D-CWK02

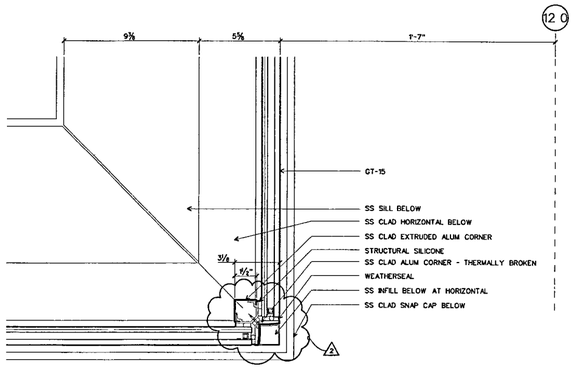

WALL SYSTEM K· PLAN DETAIL AT CORNER (22)
SCALE 3 " = 1-0' D-CWK02

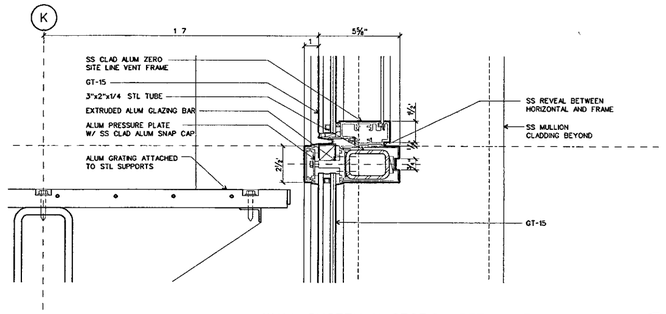

WALL SYSTEM K· SECTION DETAIL AT HORIZONTAL (31)
SCALE 3 " = 1-0 D-CWK02

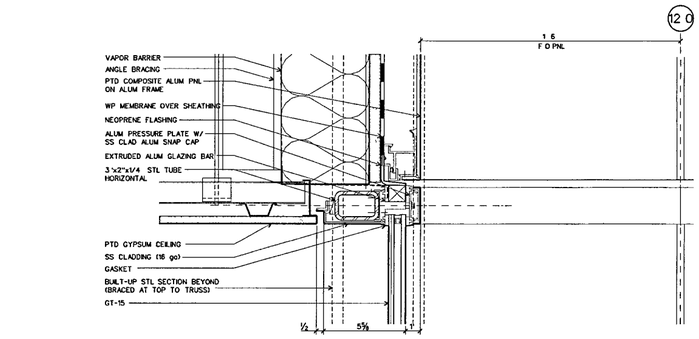

WALL SYSTEM K· SECTION DETAIL AT HEAD (30)
SCALE 3 ' = 1-0 D-CWK02

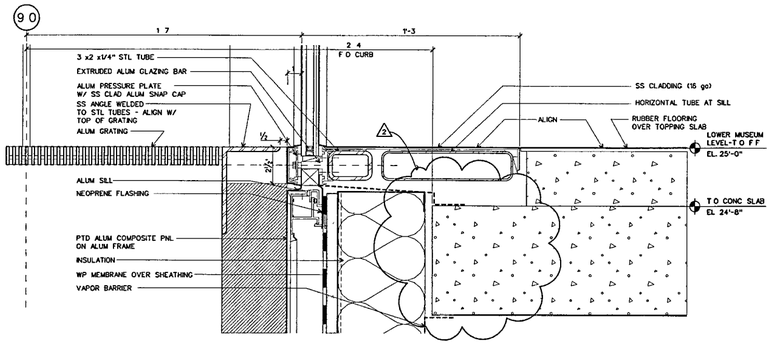

WALL SYSTEM K· SECTION DETAIL AT SILL (21)
SCALE 3 " = 1'-0" D-CWK02

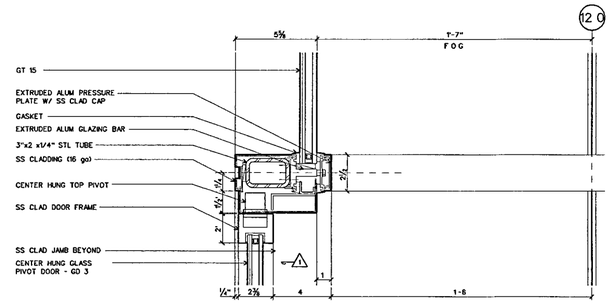

WALL SYSTEM K· SECTION DETAIL AT DOOR HEAD (20)
SCALE 3 " = 1'-0" D-CWK02

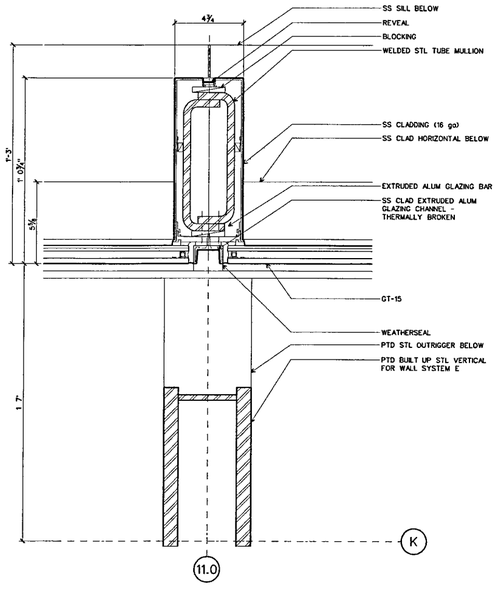

WALL SYSTEM K· PLAN DETAIL AT MULLION (12)
SCALE 3 ' = 1-0 D-CWK02

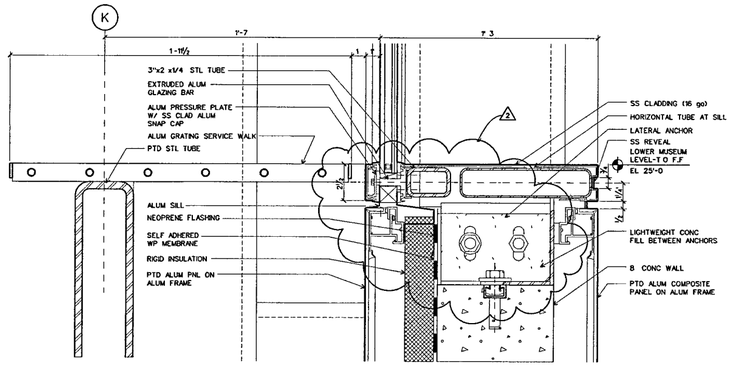

WALL SYSTEM K· SECTION DETAIL AT SILL (11)
SCALE 3 = 1-0 D-CWK02

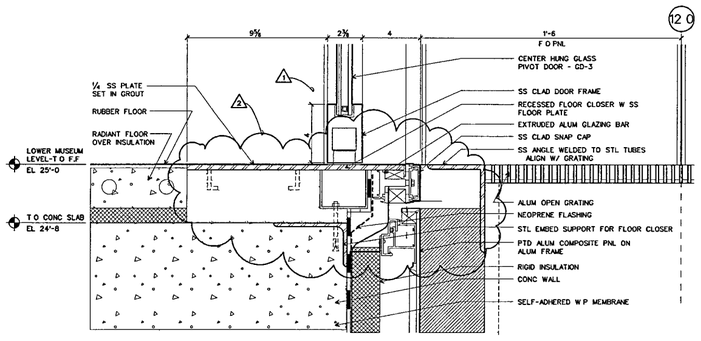

WALL SYSTEM K: SECTION DETAIL AT DOOR (10)
SCALE 3 = 1-0 D-CWK02

WILLIAM J CLINTON PRESIDENTIAL CENTER

LITTLE ROCK, ARKANSAS

Architect
POLSHEK PARTNERSHIP LLP
320 West 13th Street
New York New York 10014
212 807 7171

Coordinating Architects
POLK STANLEY YEARY ARCHITECTS Ltd
700 South Schiller Street
Little Rock, Arkansas 72201
501 378 0878

WITSELL EVANS RASCO
901 West Third Street
Little Rock, Arkansas 72201
501 374 5300

WOODS CARADINE ARCHITECTS
2200 South Main Street
Little Rock, Arkansas 72206
501 374.4060

Landscape Architects
HARGREAVES ASSOCIATES
118 Magazine Street
Cambridge Massachusettes 02139
617 661 0070

LANDSCAPE ARCHITECTURE Inc
2300 Cottondale Lane Suite 202
Little Rock, Arkansas 72202
501 374 5610

Structural Engineer
LESLIE E ROBERTSON ASSOC RLLP
30 Broad Street, 47th Floor
New York, New York 10004
212 750 9000

MEP Engineers
FLACK + KURTZ Inc.
475 Fifth Avenue
New York, New York 10017
212.532 9600

CROMWELL ARCHITECTS ENGINEERS
101 South Spring Street
Little Rock, Arkansas 72201
501 372 2900

Curtainwall Consultant
R. A. HEINTGES ARCHITECTS
126 Fifth Avenue 9th Floor
New York, New York 10011
212 652-2966

Seal

RICHARD OLOT PRESTON ARCHITECT 3405 ARKANSAS

Issue	Date
100% Construction Documents	09/27/02
90% Progress Printing	08/30/02
100% Struct/ CD Progress	07/01/02
100% Design Development	03/01/02

Job No 9908

Scale 3" = 1'-0"

Date September 27, 2002

Title
WALL SYSTEMS K PLAN AND SECTION DETAILS

Sheet No
A383

FOR OFFICIAL USE ONLY

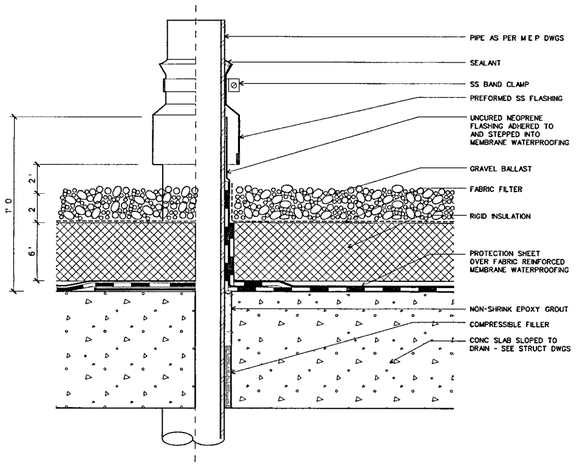

PIPE PENETRATION AT FLUID APPLIED MEMBRANE ROOF (22)

SCALE 3 " = 1'-0

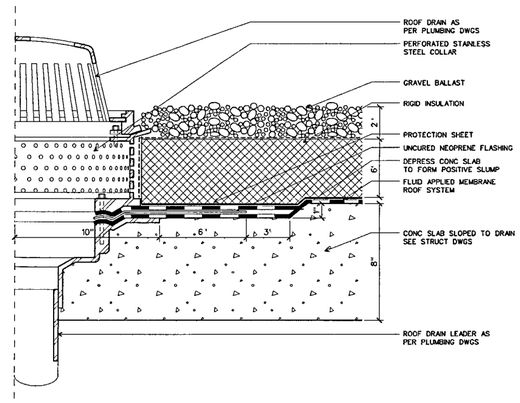

ROOF DRAIN AT FLUID APPLIED MEMBRANE ROOF (21)

SCALE 3 " = 1'-0

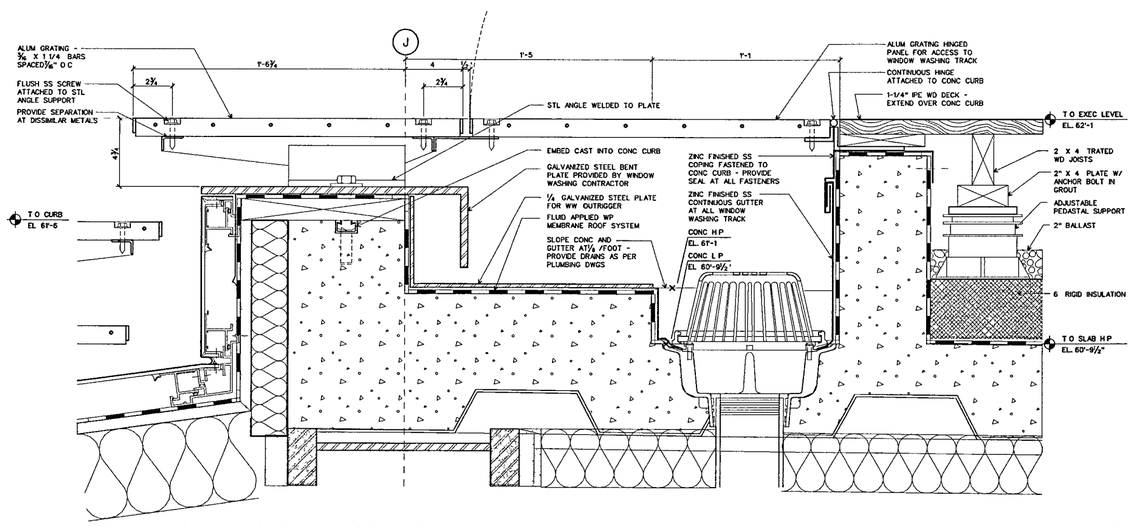

DETAIL SECTION AT WINDOW WASHING TRACK (11)

SCALE 3 " = 1'-0

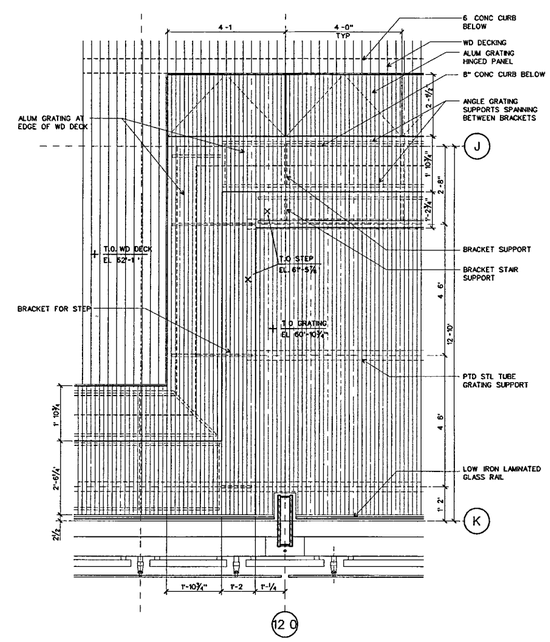

PLAN DETAIL AT GRATING STEP (10)

SCALE 1/2" = 1'-0'

WILLIAM J CLINTON PRESIDENTIAL CENTER

LITTLE ROCK, ARKANSAS

Architect

POLSHEK PARTNERSHIP LLP
320 West 13th Street
New York, New York 10014
212 807 7171

Coordinating Architects

POLK STANLEY YEARY ARCHITECTS Ltd
700 South Schiller Street
Little Rock, Arkansas 72201
501 378 0878

WITSELL EVANS RASCO
901 West Third Street
Little Rock, Arkansas 72201
501 374 5300

WOODS CARADINE ARCHITECTS
2200 South Main Street
Little Rock, Arkansas 72206
501 374 4060

Landscape Architects

HARGREAVES ASSOCIATES
118 Magazine Street
Cambridge Massachusettes 02139
617 661 0070

LANDSCAPE ARCHITECTURE Inc.
2300 Cottondale Lane Suite 202
Little Rock, Arkansas 72202
501 374 5610

Structural Engineer

LESLIE E. ROBERTSON ASSOC RLLP
30 Broad Street, 47th Floor
New York, New York 10004
212 750 9000

MEP Engineers

FLACK + KURTZ Inc.
475 Fifth Avenue
New York, New York 10017
212.532 9600

CROMWELL ARCHITECTS ENGINEERS
101 South Spring Street
Little Rock Arkansas 72201
501 372 2900

Curtainwall Consultant

R. A. HEINTGES ARCHITECTS
126 Fifth Avenue, 9th Floor
New York, New York 10011
212 652-2966

Seal

Issue	Date
100% Constructon Documents	09/27/02
90% Progress Printing	08/30/02

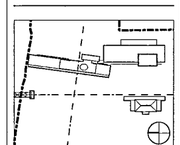

Job No 9908

Scale AS NOTED

Date September 27, 2002

Title

ROOF DETAILS

Sheet No

A386

FOR OFFICIAL USE ONLY

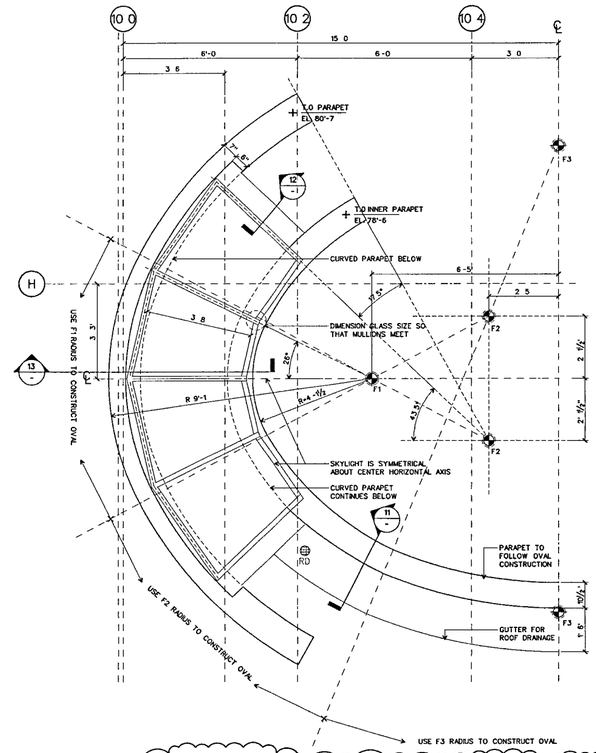

SKYLIGHT PLAN 21
SCALE 1-1/2 " = 1'-0"

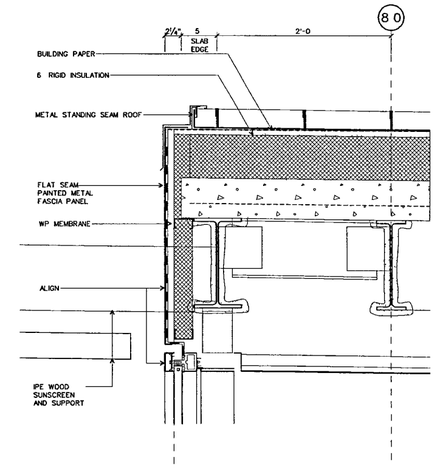

EXEC ROOF: DETAIL SECTION THROUGH GABLE TYP 30
SCALE 1-1/2 " = 1'-0"

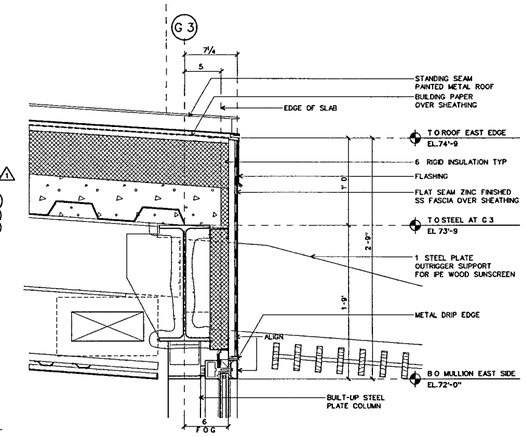

EXEC ROOF: DETAIL SECTION THROUGH WEST EAVE 20
SCALE 1-1/2 " = 1'-0"

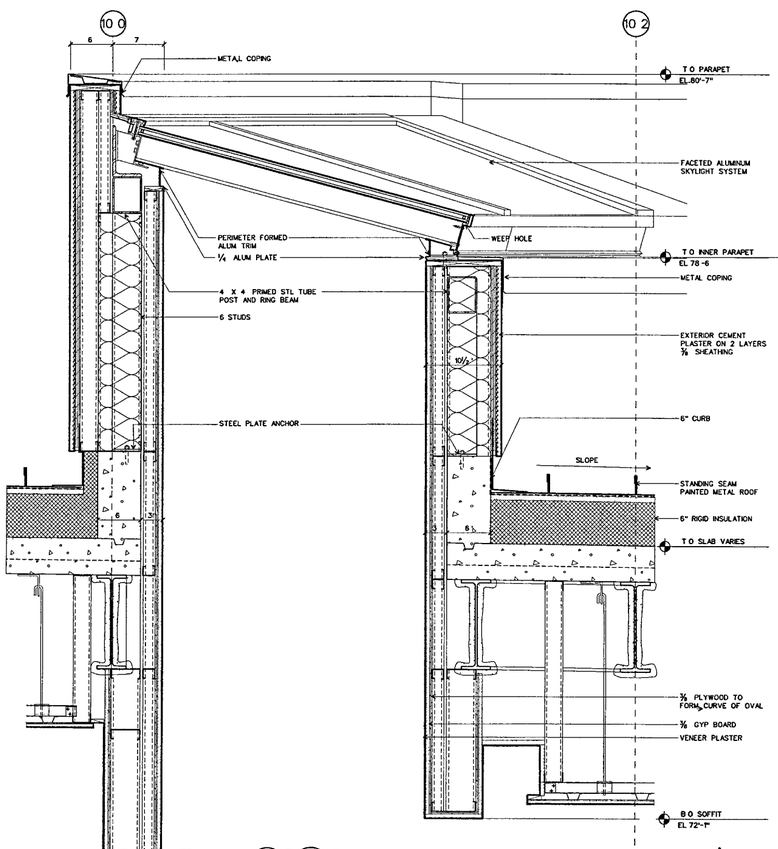

EXEC SKYLIGHT: SECTION DETAIL 13
SCALE 1-1/2 " = 1'-0"

EXEC SKYLIGHT: DETAIL SECTION OF GABLE 12
SCALE 1-1/2 " = 1'-0"

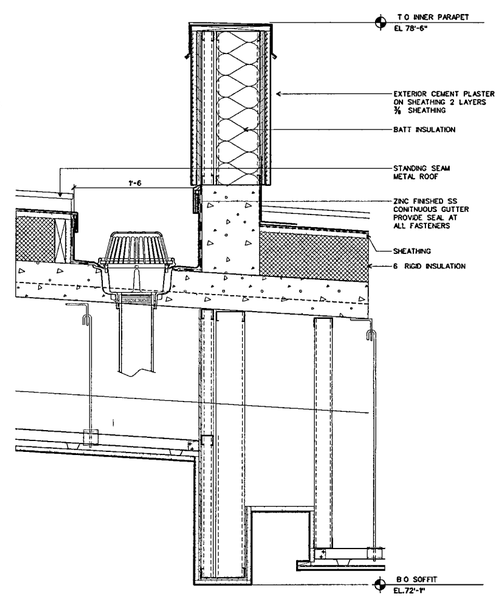

EXEC ROOF: DETAIL SECTION THROUGH WEST PARAPET 11
SCALE 1-1/2 " = 1'-0"

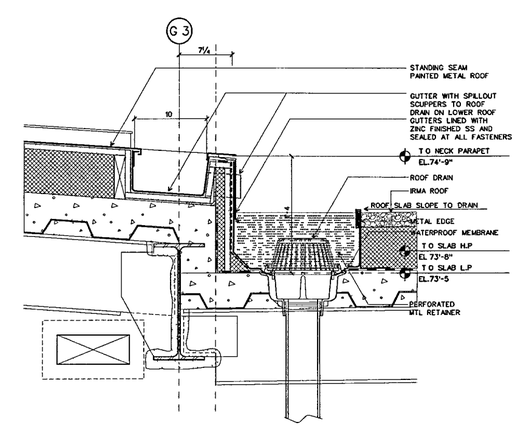

EXEC ROOF: DETAIL SECTION OF TRANSITION TO CORE ROOF 10
SCALE 1-1/2 " = 1'-0"

FOR OFFICIAL USE ONLY

WILLIAM J CLINTON PRESIDENTIAL CENTER

LITTLE ROCK, ARKANSAS

Architect
POLSHEK PARTNERSHIP LLP
320 West 13th Street
New York, New York 10014
212 807 7171

Coordinating Architects
POLK STANLEY YEARY ARCHITECTS Ltd
700 South Schiller Street
Little Rock, Arkansas 72201
501 378 0878

WITSELL EVANS RASCO
901 West Third Street
Little Rock Arkansas 72201
501 374 5300

WOODS CARADINE ARCHITECTS
2200 South Main Street
Little Rock, Arkansas 72206
501 374 4060

Landscape Architects
HARGREAVES ASSOCIATES
118 Magazine Street
Cambridge Massachusettes 02139
617 661 0070

LANDSCAPE ARCHITECTURE Inc.
2300 Cottondale Lane Suite 202
Little Rock, Arkansas 72202
501 374 5810

Structural Engineer
LESLIE E ROBERTSON ASSOC , RLLP
30 Broad Street, 47th Floor
New York, New York 10004
212 750 9000

MEP Engineers
FLACK + KURTZ Inc.
475 Fifth Avenue
New York, New York 10017
212 532.9600

CROMWELL ARCHITECTS ENGINEERS
101 South Spring Street
Little Rock, Arkansas 72201
501 372 2900

Curtainwall Consultant
R. A. HEINTGES ARCHITECTS
126 Fifth Avenue, 9th Floor
New York, New York 10011
212 652-2966

Seal

Issue	Date
1 100% Construction Documents	09/27/02
90% Progress Printing	08/30/02

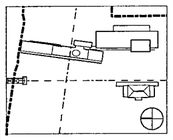

Job No 9908

Scale AS NOTED

Date September 27, 2002

Title
MUSEUM BUILDING ROOF DETAILS - EXEC LVL ROOF & SKYLIGHT

Sheet No
A388

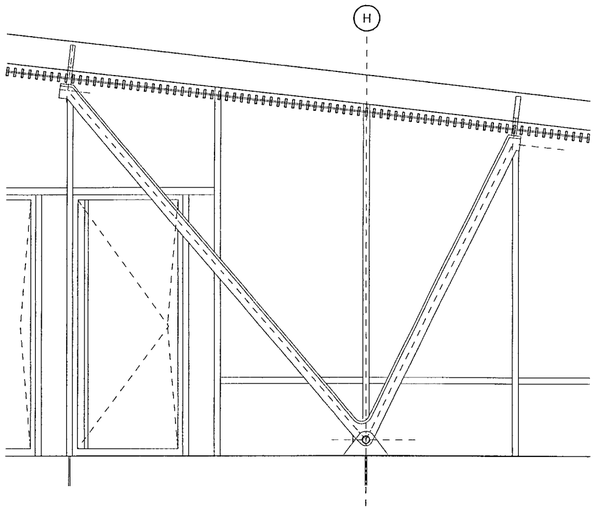

CANOPY SUPPORT AT NORTH

SCALE 1/2" = 1'-0" detail/interior glazing 03 (22)

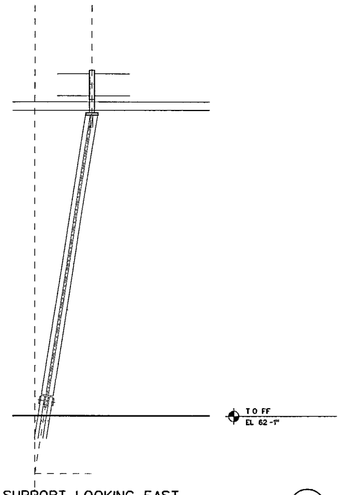

CANOPY SUPPORT LOOKING EAST

SCALE 1/2" = 1'-0" detail/interior glazing 03 (21)

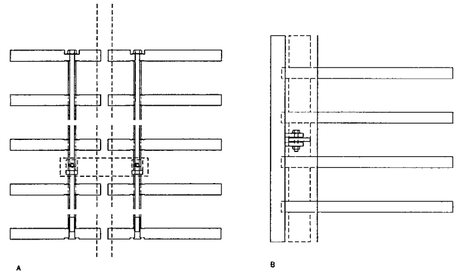

CANOPY- DETAIL PLAN

SCALE 3 = 1-0 detail/interior glazing 03 (31)

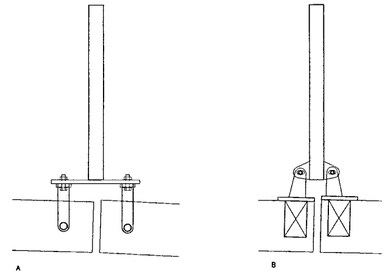

CANOPY- DETAIL SECTION

SCALE 3 " = 1'-0" detail/interior glazing 03 (30)

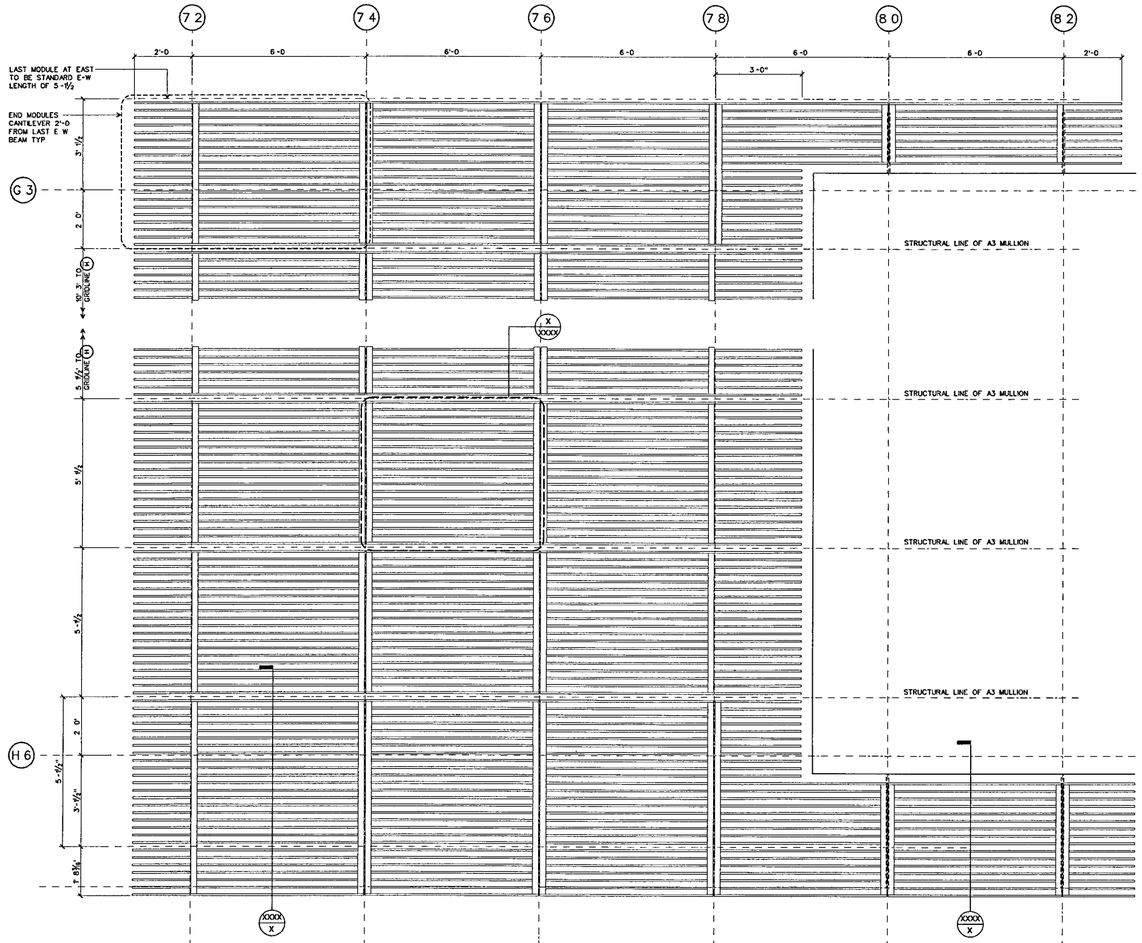

PLAN SUNSCREEN AT NORTH EXECUTIVE LEVEL

SCALE 1/2" = 1-0 (21) detail/canopy exec lev (11)

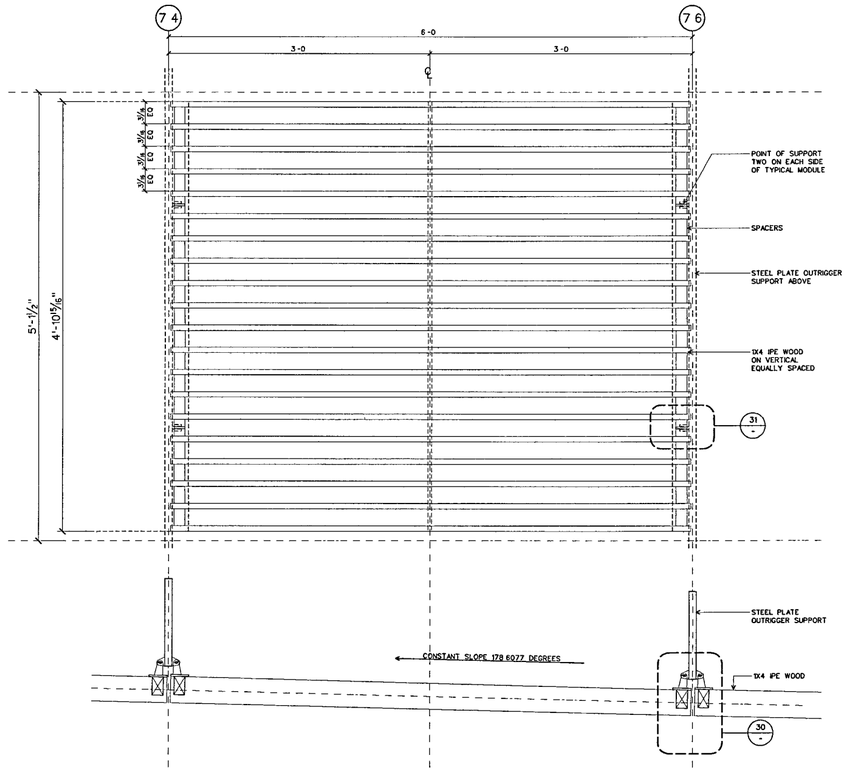

ELEVATION SECTION AND PLAN- TYPICAL SUNSCREEN MODULE

SCALE 1 = 1-0" detail/interior glazing 03 (20)

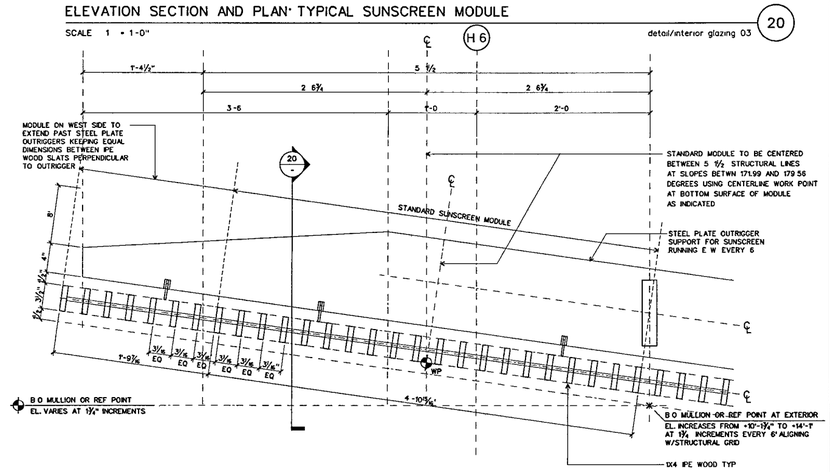

SECTION DETAIL: SUNSCREEN TYPICAL MODULE

SCALE 1 1/2" = 1'-0" detail/canopy exec lev (10)

WILLIAM J CLINTON PRESIDENTIAL CENTER

LITTLE ROCK, ARKANSAS

Architect

POLSHEK PARTNERSHIP LLP
320 West 13th Street
New York, New York 10014
212.807 7171

Coordinating Architects

POLK STANLEY YEARY ARCHITECTS Ltd
700 South Schiller Street
Little Rock, Arkansas 72201
501 378 0878

WITSELL EVANS RASCO
901 West Third Street
Little Rock Arkansas 72201
501 374 5300

WOODS CARADINE ARCHITECTS
2200 South Main Street
Little Rock, Arkansas 72206
501 374 4060

Landscape Architects

HARGREAVES ASSOCIATES
118 Magazine Street
Cambridge Massachusettes 02139
617 661 0070

LANDSCAPE ARCHITECTURE, Inc.
2300 Cottondale Lane Suite 202
Little Rock, Arkansas 72202
501 374 5610

Structural Engineer

LESLIE E. ROBERTSON ASSOC RLLP
30 Broad Street, 47th Floor
New York, New York 10004
212 750 9000

MEP Engineers

FLACK + KURTZ Inc.
475 Fifth Avenue
New York, New York 10017
212.532.9600

CROMWELL ARCHITECTS ENGINEERS
101 South Spring Street
Little Rock, Arkansas 72201
501 372.2900

Curtainwall Consultant

R A. HEINTGES ARCHITECTS
126 Fifth Avenue 9th Floor
New York, New York 10011
212 852-2966

Seal

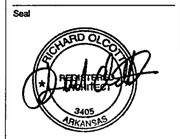

Issue	Date
100% Construction Documents	09/27/02
100% Struct./ CD Progress	07/01/02

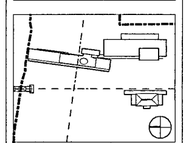

Job No 9908

Scale 1 1/2"-3" = 1' 0"

Date September 27, 2002

Title SUNSCREEN

EXECUTIVE LEVEL

Sheet No A389

FOR OFFICIAL USE ONLY

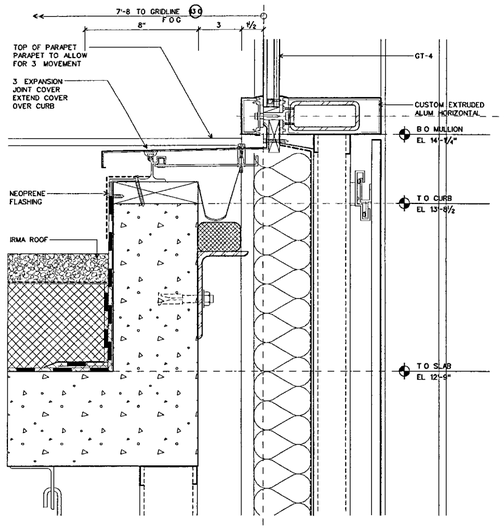

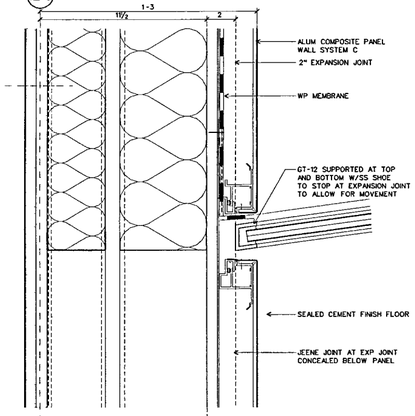

GROUND LEVEL· DETAIL PLAN AT H CURTAINWALL — 32
SCALE 3" = 1'-0" — D-EXPJNT

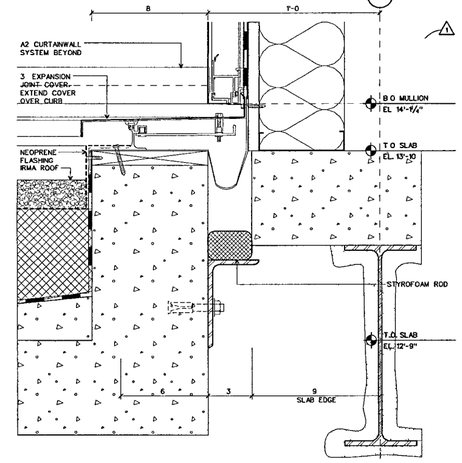

DETAIL SECTION AT ROOF — 31
SCALE 3" = 1'-0" — D-EXPJNT

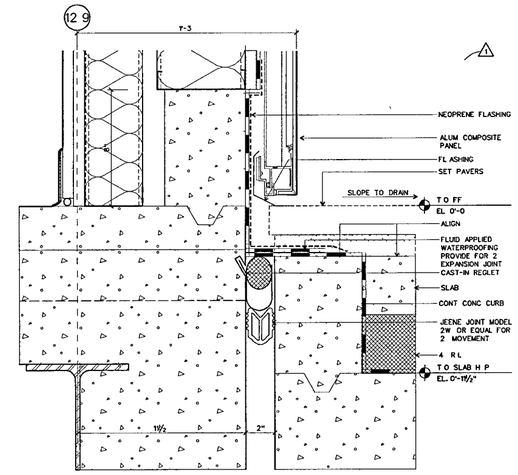

GROUND LEVEL· SECTION AT EXTERIOR — 30
SCALE 3" = 1'-0 — D-EXPJNT

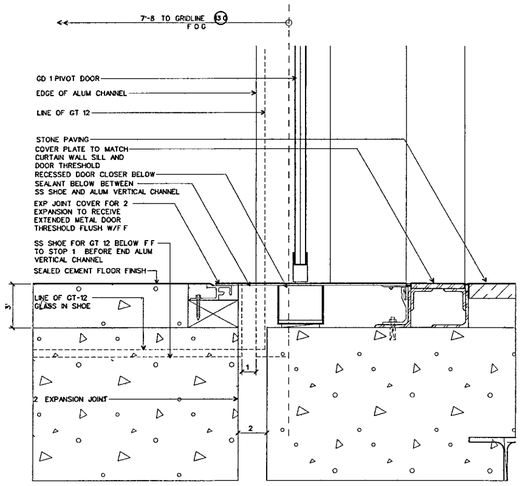

GROUND LEVEL· SECTION DETAIL AT ROOF AND A2 CW DOOR — 22
SCALE 3" = 1'-0" — D-EXPJNT

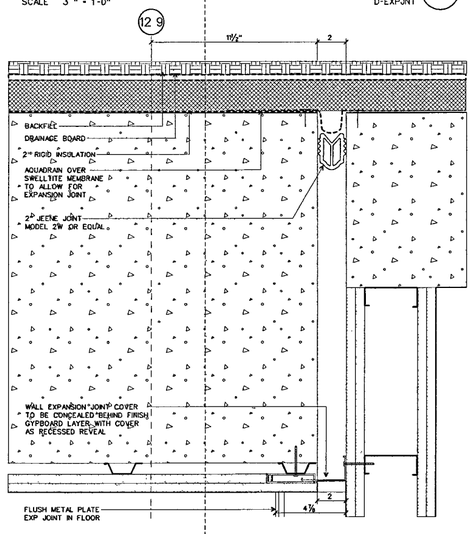

BASEMENT LEVEL· PLAN DETAIL AT FOUNDATION WALL — 22
SCALE 3" = 1'-0" — D-EXPJNT

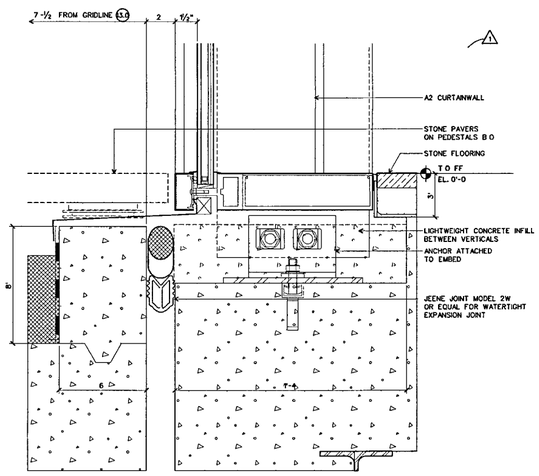

GROUND LEVEL: SECTION AT WALL SYSTEM A2 — 21
SCALE 3' = 1'-0' — D-EXPJNT

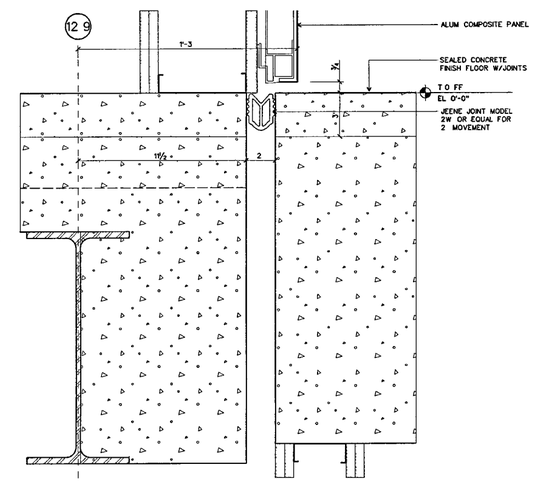

GROUND LEVEL: SECTION AT INTERIOR — 20
SCALE 3" = 1'-0 — D-EXPJNT

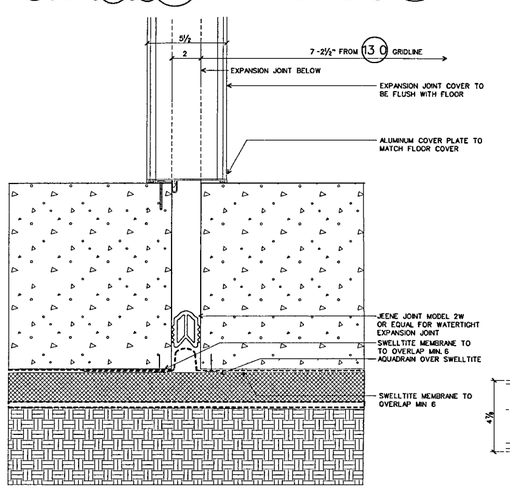

BASEMENT LEVEL: PLAN AT FOUNDATION WALL — 13
SCALE 3" = 1'-0" — D-EXPJNT

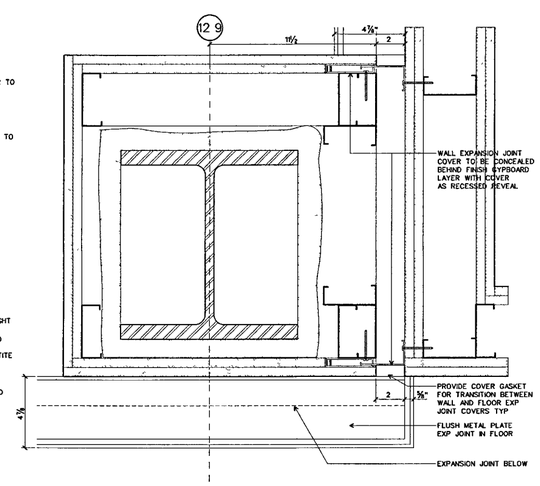

BASEMENT LEVEL· PLAN DETAIL AT INTERIOR — 12
SCALE 3" = 1'-0" — D-EXPJNT

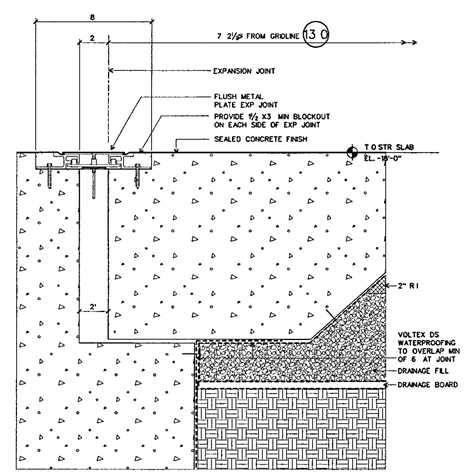

BASEMENT LEVEL· SECTION AT FLOOR — 11
SCALE 3" = 1'-0 — D-EXPJNT

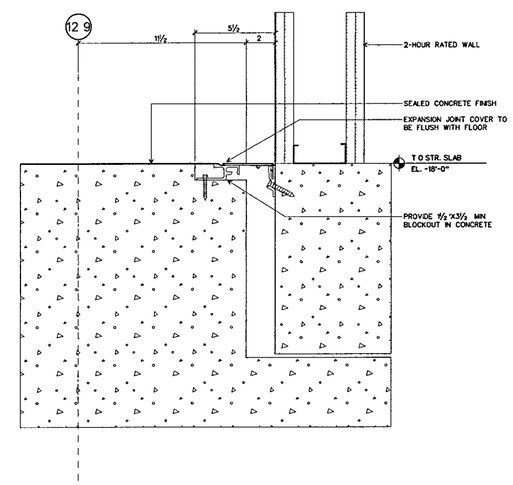

BASEMENT LEVEL: SECTION AT WALL — 10
SCALE 3" = 1'-0 — D-EXPJNT

WILLIAM J. CLINTON PRESIDENTIAL CENTER

LITTLE ROCK, ARKANSAS

Architect
POLSHEK PARTNERSHIP LLP
320 West 13th Street
New York, New York 10014
212 807 7171

Coordinating Architects
POLK STANLEY YEARY ARCHITECTS Ltd
700 South Schiller Street
Little Rock, Arkansas 72201
501 378 0878

WITSELL EVANS RASCO
901 West Third Street
Little Rock, Arkansas 72201
501 374 5300

WOODS CARADINE ARCHITECTS
2200 South Main Street
Little Rock, Arkansas 72206
501 374 4060

Landscape Architects
HARGREAVES ASSOCIATES
118 Magazine Street
Cambridge, Massachusettes 02139
617 661 0070

LANDSCAPE ARCHITECTURE, Inc.
2300 Cottondale Lane Suite 202
Little Rock, Arkansas 72202
501 374 5610

Structural Engineer
LESLIE E. ROBERTSON ASSOC. RLLP
30 Broad Street, 47th Floor
New York, New York 10004
212 750 9000

MEP Engineers
FLACK + KURTZ Inc.
475 Fifth Avenue
New York, New York 10017
212 532.9600

CROMWELL ARCHITECTS ENGINEERS
101 South Spring Street
Little Rock, Arkansas 72201
501 372 2900

Curtainwall Consultant
R. A. HEINTGES ARCHITECTS
126 Fifth Avenue, 9th Floor
New York, New York 10011
212 652-2966

Seal

Issue	Date
2 100% Construction Documents	09/27/02
1 90% Progress Printing	08/30/02
100% Struct./ CD Progress	07/01/02
Bridge Bldg. Substructure	06/14/02
100% Steel & Concrete CD & Architectural CD Progress	05/15/02

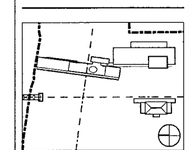

Job No: 9908

Scale: 3" = 1'-0"

Date: September 27, 2002

Title: EXPANSION JOINT DETAILS

Sheet No: A390

FOR OFFICIAL USE ONLY

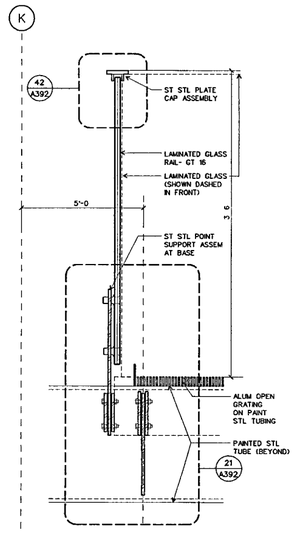

SECTION DETAIL- GLASS GUARDRAIL
POINT SUPPORTED
SCALE 1½" = 1-0" D-EXT-RAIL 32

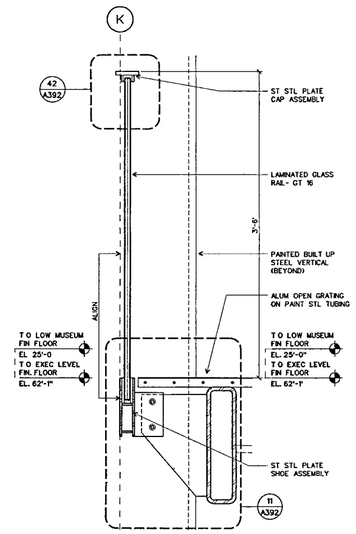

SECTION DETAIL- GLASS GUARDRAIL
ST STL. SHOE SUPPORT
SCALE 1½" = 1-0 D-EXT-RAIL 31

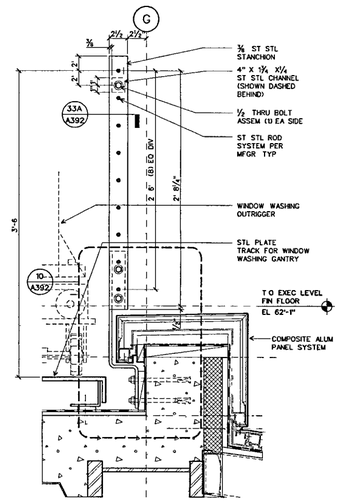

SECTION DETAIL- ROD GUARDRAIL
SCALE 1½" = 1-0" D-EXT-RAIL 30

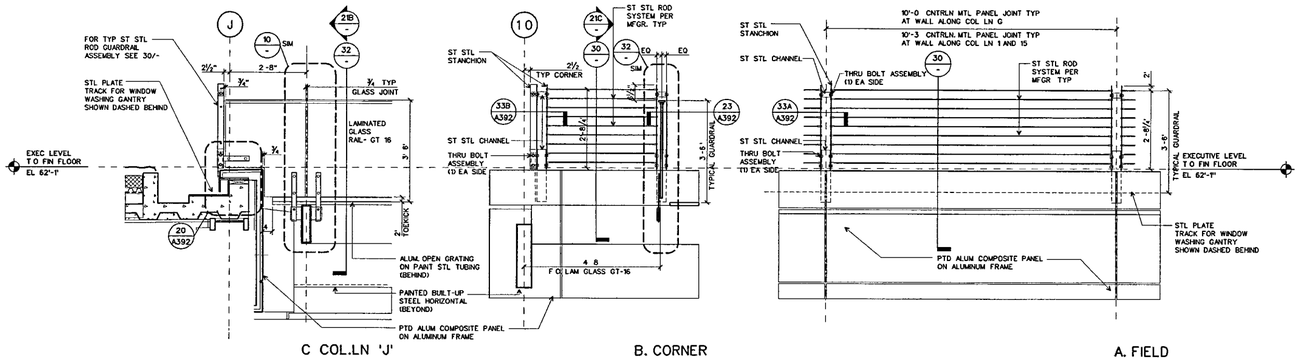

ELEVATION- ST STL. ROD GUARDRAIL
SCALE ½" = 1-0" D-EXT-RAIL 21

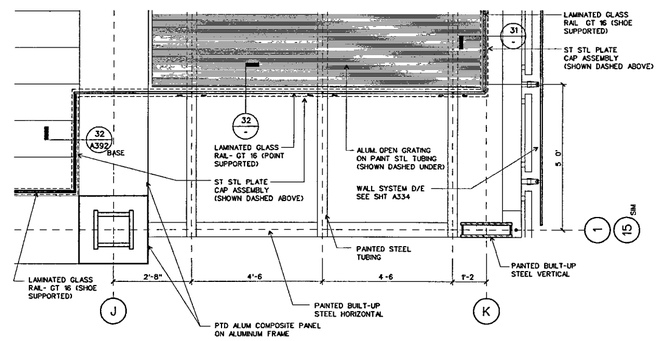

PLAN- POINT SUPPORT GLASS GUARD
SCALE ½" = 1-0 D-EXT-RAIL 20

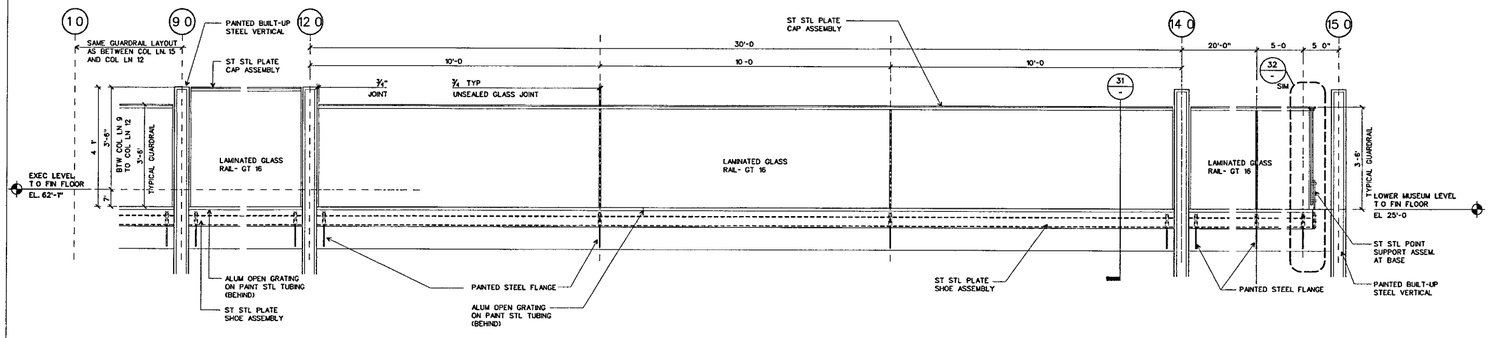

ELEVATION- GLASS GUARD AT TERRACE
WALKWAY COLUMN LINE 'K'
SCALE ½ = 1-0 D-EXT-RAIL 11

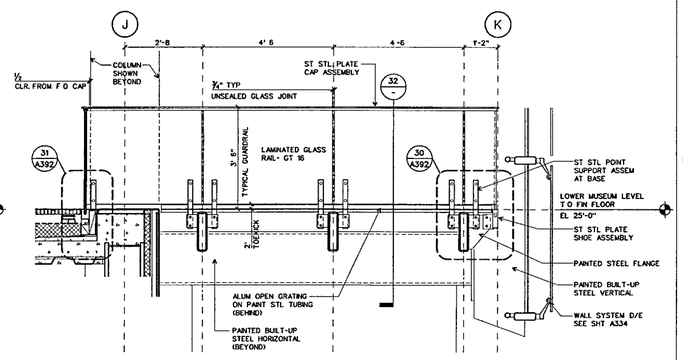

ELEVATION- POINT SUPPORT GLASS GUARD
SCALE ½ = 1-0 D-EXT-RAIL 10

WILLIAM J CLINTON PRESIDENTIAL CENTER

LITTLE ROCK, ARKANSAS

Architect

POLSHEK PARTNERSHIP LLP
320 West 13th Street
New York, New York 10014
212 807 7171

Coordinating Architects

POLK STANLEY YEARY ARCHITECTS Ltd
700 South Schiller Street
Little Rock, Arkansas 72201
501.378 0878

WITSELL EVANS RASCO
901 West Third Street
Little Rock, Arkansas 72201
501 374 5300

WOODS CARADINE ARCHITECTS
2200 South Main Street
Little Rock, Arkansas 72206
501 374 4060

Landscape Architects

HARGREAVES ASSOCIATES
118 Magazine Street
Cambridge, Massachusettes 02139
617 661 0070

LANDSCAPE ARCHITECTURE, Inc.
2300 Cottondale Lane Suite 202
Little Rock, Arkansas 72202
501 374 5610

Structural Engineer

LESLIE E ROBERTSON ASSOC RLLP
30 Broad Street, 47th Floor
New York, New York 10004
212.750 9000

MEP Engineers

FLACK + KURTZ Inc.
475 Fifth Avenue
New York, New York 10017
212 532.9600

CROMWELL ARCHITECTS ENGINEERS
101 South Spring Street
Little Rock, Arkansas 72201
501 372.2900

Curtainwall Consultant

R. A HEINTGES ARCHITECTS
126 Fifth Avenue, 9th Floor
New York New York 10011
212 652-2966

Seal

RICHARD OLCOTT REGISTERED ARCHITECT 3405 ARKANSAS

Issue	Date
100% Construction Documents	09/27/02

Job No 9908

Scale AS NOTED

Date September 27, 2002

Title EXTERIOR RAILING DETAILS

Sheet No A391

FOR OFFICIAL USE ONLY

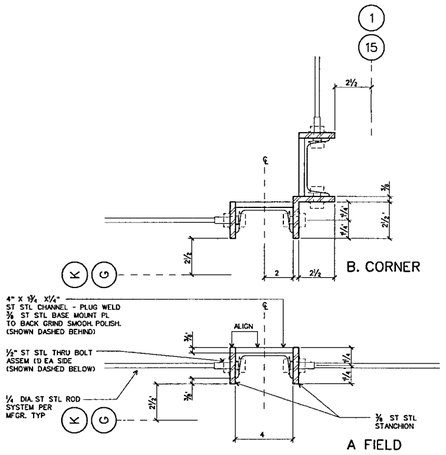

DETAIL: PLAN- ROD GUARDRAIL (33)
SCALE 3 = 1-0 D-EXT-RAIL

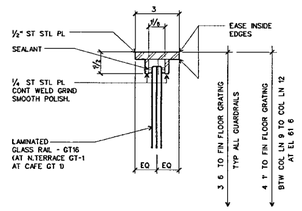

DETAIL: END CAP- GLASS GUARDRAIL (42)
SCALE 3 = 1-0 D-EXT-RAIL

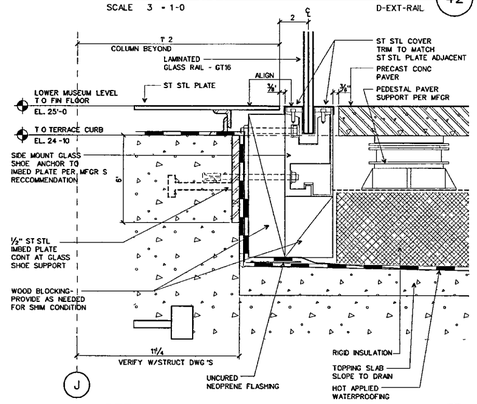

DETAIL GLASS GUARDRAIL SHOE (32)
SCALE 3" = 1'-0" D-EXT-RAIL

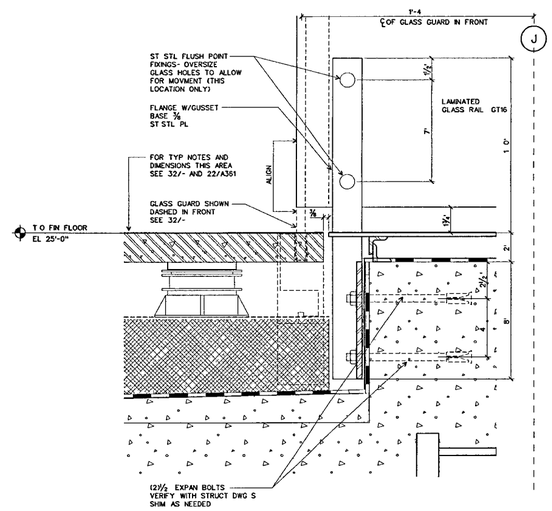

DETAIL- GLASS GUARD. POINT SUPPORT BASE (31)
SCALE 3" = 1-0 D-EXT-RAIL

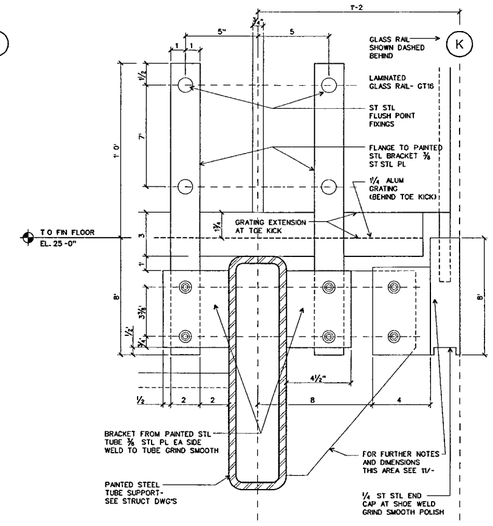

DETAIL- GLASS GUARD. POINT SUPPORT BASE (30)
SCALE 3 = 1-0" D-EXT-RAIL

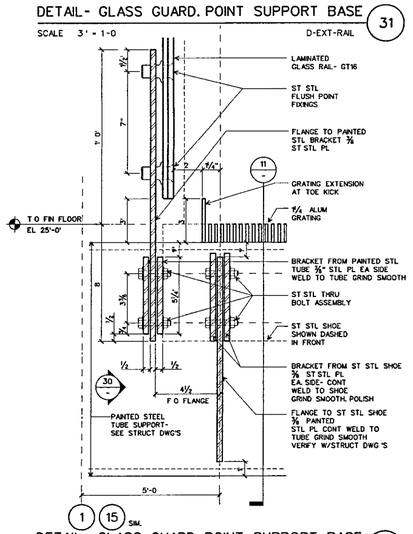

DETAIL- GLASS GUARD POINT SUPPORT BASE (21)
SCALE 3' = 1-0 D-EXT-RAIL

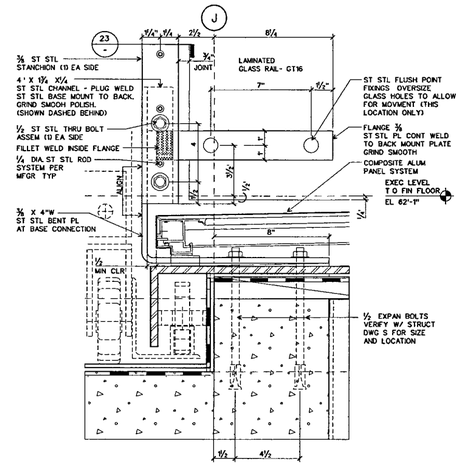

DETAIL- ROD GUARDRAIL BASE (20)
SCALE 3" = 1'-0" D-EXT-RAIL

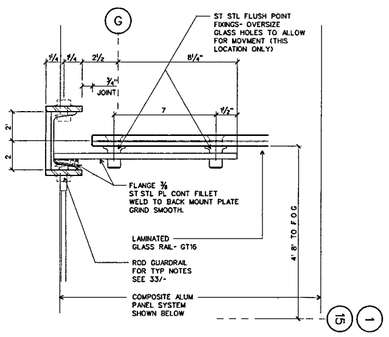

DETAIL: PLAN- ROD GUARDRAIL AT POINT SUPPORT GLASS GUARD (23)
SCALE 3 = 1-0 D-EXT-RAIL

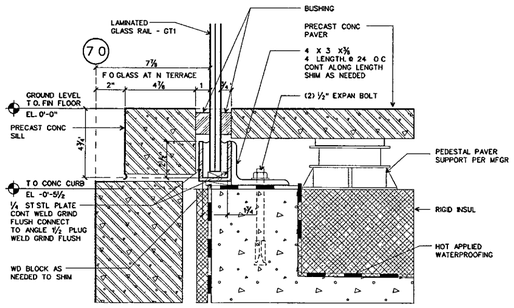

DETAIL: GLASS GUARDRAIL SHOE (22)
SCALE 3 = 1'-0" D-EXT-RAIL

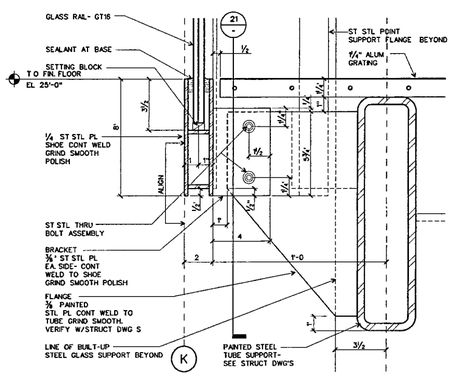

DETAIL- GLASS GUARDRAIL SHOE (11)
SCALE 3' = 1'-0' D-EXT-RAIL

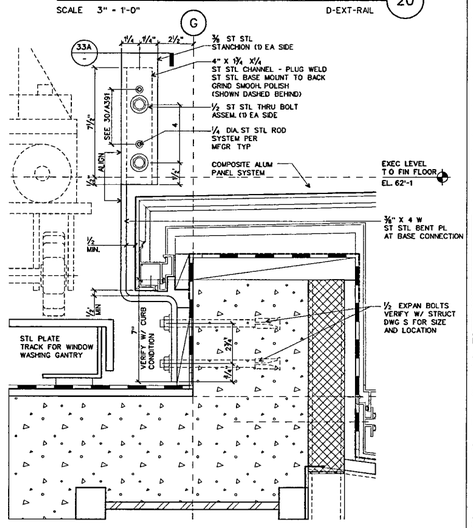

DETAIL- ROD GUARDRAIL BASE (10)
SCALE 3 = 1-0 D-EXT-RAIL

WILLIAM J CLINTON PRESIDENTIAL CENTER

LITTLE ROCK, ARKANSAS

Architect

POLSHEK PARTNERSHIP LLP
320 West 13th Street
New York, New York 10014
212 807 7171

Coordinating Architects

POLK STANLEY YEARY ARCHITECTS Ltd
700 South Schiller Street
Little Rock Arkansas 72201
501 378 0878

WITSELL EVANS RASCO
901 West Third Street
Little Rock, Arkansas 72201
501 374 5300

WOODS CARADINE ARCHITECTS
2200 South Main Street
Little Rock, Arkansas 72206
501 374 4060

Landscape Architects

HARGREAVES ASSOCIATES
118 Magazine Street
Cambridge Massachusettes 02139
617 661 0070

LANDSCAPE ARCHITECTURE, Inc.
2300 Cottondale Lane Suite 202
Little Rock, Arkansas 72202
501 374 5610

Structural Engineer

LESLIE E ROBERTSON ASSOC RLLP
30 Broad Street, 47th Floor
New York, New York 10004
212 750 9000

MEP Engineers

FLACK + KURTZ Inc.
475 Fifth Avenue
New York, New York 10017
212.532.9600

CROMWELL ARCHITECTS ENGINEERS
101 South Spring Street
Little Rock, Arkansas 72201
501 372 2900

Curtainwall Consultant

R A. HEINTGES ARCHITECTS
126 Fifth Avenue, 9th Floor
New York, New York 10011
212.652-2966

Seal

Issue	Date
100% Construction Documents	09/27/02

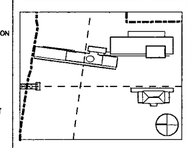

Job No: 9908

Scale: AS NOTED

Date: September 27 2002

Title: EXTERIOR RAILING DETAILS

Sheet No: A392

FOR OFFICIAL USE ONLY

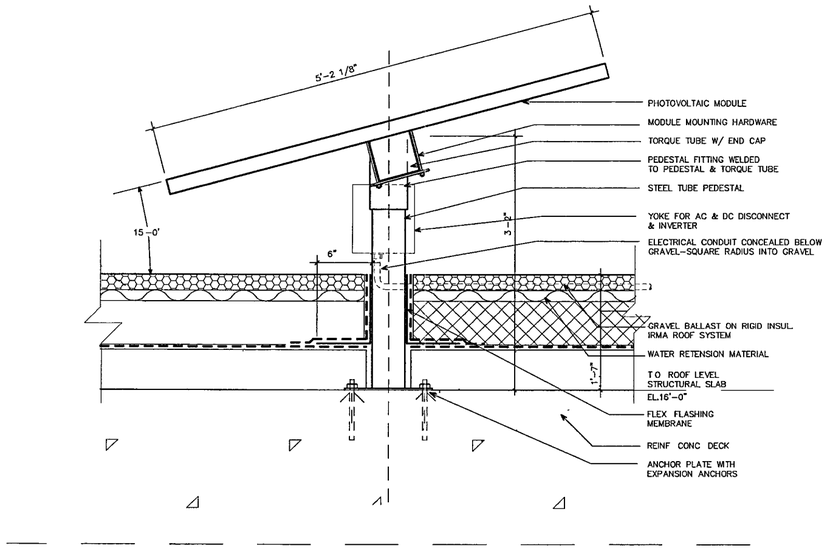

PHOTOVOLTAIC PANEL FRAMING DETAIL (21)

SCALE. 3" = 1'-0"

NOT USED (20)

SCALE. 3/4" = 1'-0"

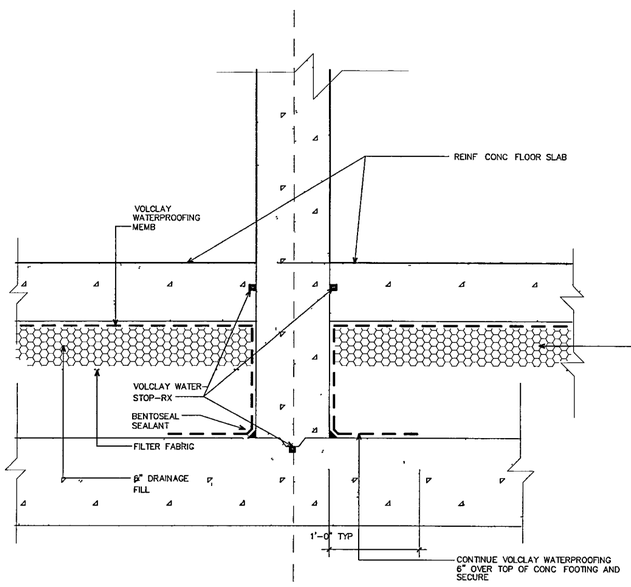

COLUMN TO FOOTING WATERPROOFING DETAIL (12)

SCALE. 3/4" = 1'-0"

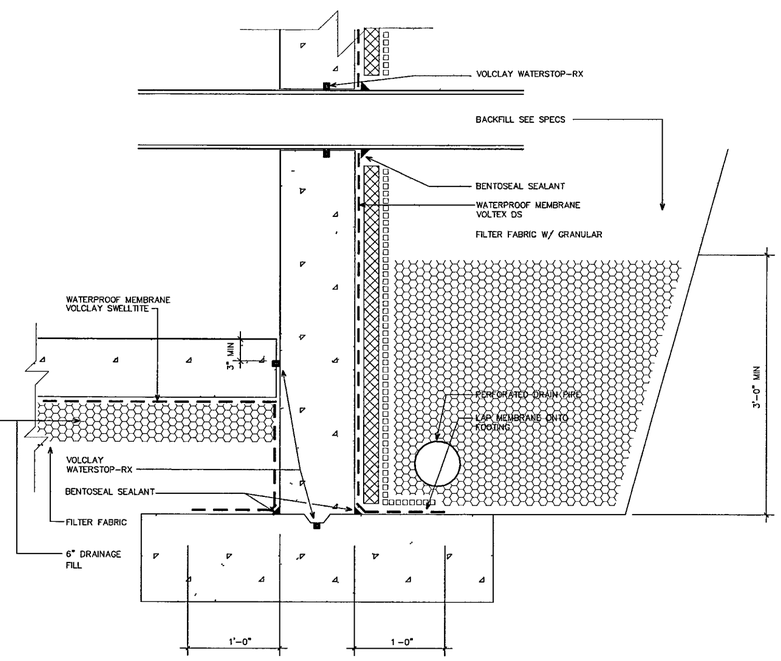

FOUNDATION WALL TO FOOTING WATERPROOFING DETAIL (11)

SCALE. 3/4" = 1'-0"

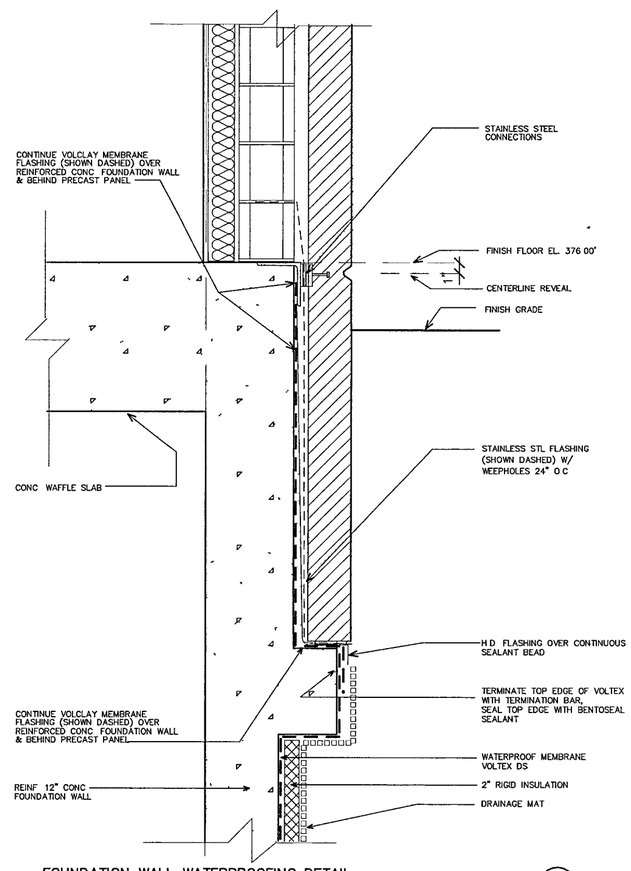

FOUNDATION WALL WATERPROOFING DETAIL (10)

SCALE. 3/4" = 1'-0"

WILLIAM J. CLINTON PRESIDENTIAL CENTER

LITTLE ROCK, ARKANSAS

Architect

POLSHEK PARTNERSHIP LLP
320 West 13th Street
New York, New York 10014
212.807.7171

Coordinating Architects

POLK STANLEY YEARY ARCHITECTS Ltd
700 South Schiller Street
Little Rock, Arkansas 72201
501.378.0878

WITSELL EVANS & RASCO
901 West Third Street
Little Rock, Arkansas 72201
501.374.5300

WOODS CARADINE ARCHITECTS
2200 South Main Street
Little Rock, Arkansas 72206
501.374.4060

Landscape Architects

HARGREAVES ASSOCIATES
118 Magazine Street
Cambridge, Massachusettes 02139
617.661.0070

LANDSCAPE ARCHITECTURE, Inc.
2300 Cottondale Lane Suite 202
Little Rock, Arkansas 72202
501.374.5610

Structural Engineer

LESLIE E. ROBERTSON ASSOC., RLLP
30 Broad Street, 47th Floor
New York, New York 10017
212.750.9000

MEP Engineers

FLACK + KURTZ Inc.
475 Fifth Avenue
New York, New York 10017
212.532.9600

CROMWELL ARCHITECTS ENGINEERS
101 South Spring Street
Little Rock, Arkansas 72201
501.372.2900

Curtainwall Consultant

R.A. HEINTGES ARCHITECTS
128 Fifth Avenue, 9th. Floor
New York, New York 10011
212.652-2966

Seal

Issue	Date
100% Construction Documents	09/27/02
90% Progress Printing	08/30/02
100% Struct/CD Progress	07/01/02

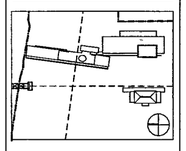

Job No PPA. 9908 PSY 426D

Scale AS SCHEDULED

Date September 27, 2002

Title ARCHIVE BUILDING MISC. DETAILS

Sheet No. A397

FOR OFFICIAL USE ONLY

THURSDAY, SEPTEMBER 26, 2002 2:39 PM

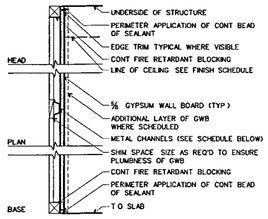

TYPE	SHIM SPACE SIZE	STUD SIZE	SPACING	WIDTH	MAX HEIGHT	INSUL GAUGE	FIRE RATING STC RATING	FIRE RATING TEST DESIGN	REMARKS
F00	VARIES	⅝	24" O.C.	VARIES	N/A	N/A	N/A	N/A	--
					N/A	N/A	N/A	N/A	
F02	VARIES	⅝	24 O C	VARIES	N/A	N/A	N/A	N/A	-
					N/A	N/A	N/A	N/A	

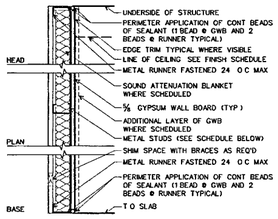

TYPE	SHIM SPACE	STUD SIZE	SPACING	WIDTH	MAX HEIGHT	INSUL GAUGE	FIRE RATING STC RATING	FIRE RATING TEST DESIGN	REMARKS
E00	VARIES	⅝	16" O C	VARIES	8'-3	NONE	NONE	GWB TO 6" ABOVE CEILING	
					25	N/A	N/A	N/A	
E02	VARIES	⅝	16 O C	VARIES	8'-3	2	NONE	--	
					25	N/A	N/A	N/A	
E04	VARIES	⅝	16" O C	VARIES	8 -3	2	NONE	--	
					25	N/A	N/A	N/A	
E10	VARIES	⅝	16 O C	VARIES	11 0	NONE	NONE	GWB TO 6" ABOVE CEILING	
					20	N/A	N/A	N/A	
E12	VARIES	⅝	16 O C	VARIES	11 0	2	NONE	-	
					20	N/A	N/A	N/A	
E14	VARIES	⅝	16 O C	VARIES	11'-0	2	NONE	--	
					20	N/A	N/A	N/A	
E20	VARIES	⅝	16 O C	VARIES	14 -6	NONE	NONE	GWB TO 6 ABOVE CEILING	
					20	N/A	N/A	N/A	
E22	VARIES	⅝	16 O C	VARIES	14 -6	3	NONE	-	
					20	N/A	N/A	N/A	
E24	VARIES	⅝	16 O C	VARIES	14 -6	3"	NONE	--	
					20	N/A	N/A	N/A	
E30	VARIES	⅝	16" O C	VARIES	20 -0"	NONE	NONE	GWB TO 6" ABOVE CEILING	
					20	N/A	N/A	N/A	
E32	VARIES	⅝	16 O C	VARIES	20'-0	3	NONE	-	
					20	N/A	N/A	N/A	
E34	VARIES	⅝	16 O C	VARIES	20'-0	3	NONE	--	
					20	N/A	N/A	N/A	

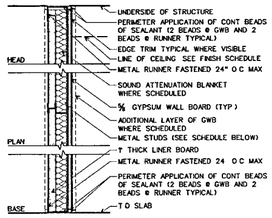

TYPE	STUD SIZE	SPACING	WIDTH	MAX HEIGHT	INSUL GAUGE	FIRE RATING STC RATING	FIRE RATING TEST DESIGN	REMARKS
D00	2½	24 O C	3¼	+14 -0"	2½	1 HOUR	•VERIFY AT ELEV CORES	--
				20	42	UL U469		
D02	2½	24 O C	3¼	+15'-3	2½	2 HOUR	•VERIFY AT ELEV CORES	-
				20	45	UL U438		
D04	2½	24 O C	3¼	+15 -3	2½	2 HOUR	•VERIFY AT ELEV CORES	-
				20	45	UL U467		
D10	4"	24 O C	4⅝	+17 -6	3	1 HOUR	•VERIFY AT ELEV CORES	-
				20	52	UL U469		
D12	4	24 O C	5¼'	+18'-2"	3	2 HOUR	•VERIFY AT ELEV CORES	--
				20	52	UL U438		
D14	4"	24 O C	5¼	18 2	3	2 HOUR	•VERIFY AT ELEV CORES	--
				20	52	UL U467		
D20	6	24 O C	6⅝	+24 -3	3	1 HOUR	•VERIFY AT ELEV CORES	-
				20	52	UL U469		
D22	6	24 O C	7¼	+25'-7	3	2 HOUR	•VERIFY AT ELEV CORES	-
				20	52	UL U438		
D24	6	24 O C	7¼	+25 -7	3"	2 HOUR	•VERIFY AT ELEV CORES	-
				20	52	UL U467		

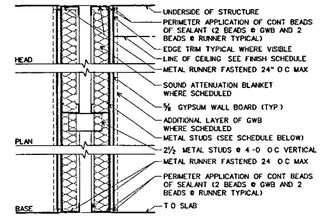

TYPE	STUD SIZE	STUD SIZE	SPACING	SPACING	WIDTH	MAX HEIGHT	INSUL GAUGE	FIRE RATING STC RATING	FIRE RATING TEST DESIGN	REMARKS
C00	⅝	1⅝	1⅝	⅝	16" O C	13'-3	3	NONE	--	
						25	52	N/A	N/A	
C02	⅝	1⅝	1⅝	⅝	16" O C	13 -3	3	1 HOUR	--	
						25	52	UL 420	--	
C04	⅝	1⅝	1⅝	⅝	16" O C	14 -6	3	2 HOUR	--	
						25	57	UL 420	--	
C10	⅝	2½	2½	⅝	16" O C	17'-6	3	NONE	--	
						20	52	N/A	N/A	
C12	⅝	2½	2½	⅝	16" O C	17'-6	3	1 HOUR	--	
						20	52	UL U420	--	
C14	⅝	2½	2½	⅝	16" O C	19 0	3	2 HOUR	--	
						20	57	UL U420	--	
C20	⅝	3⅝	3⅝	⅝	16" O C	22 9	3	NONE	--	
						20	52	N/A	N/A	
C22	⅝	3⅝	3⅝	⅝	16" O C	22 9	3	1 HOUR	--	
						20	52	UL U420	--	
C24	⅝	3⅝	3⅝	⅝	16" O C	23 6	3	2 HOUR	--	
						20	57	UL U420	--	

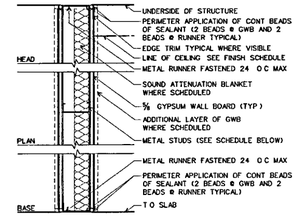

TYPE	STUD SIZE	SPACING	WIDTH	MAX HEIGHT	INSUL GAUGE	FIRE RATING STC RATING	FIRE RATING TEST DESIGN	REMARKS
B00	⅝	16 O C	3¾"	13'-0	NONE	NONE	GWB TO 6" ABOVE CEILING	
				20	N/A	N/A	N/A	
B02	⅝	16 O C	3¾	13 -10	2½	NONE		
				20	45	N/A	N/A	
B04	⅝	16 O C	3¾	13 -10	2½"	1 HOUR	--	
				20	45	OSU T-3298	--	
B06	⅝	16 O C	5	16 -1	2½	2 HOUR	--	
				20	55	UL U411	--	
B10	⅝	16 O C	4⅞	17'-3	NONE	NONE	GWB TO 6" ABOVE CEILING	
				20	N/A	N/A	N/A	
B12	⅝	16 O C	4⅞	17 11	3	NONE	--	
				20	47	N/A	--	
B14	⅝	16 O C	4⅞	17 11	3	1 HOUR	--	
				20	47	UL U465	--	
B16	⅝	16 O C	5½	17'-11	3	1½HR	--	
				20	50	OSU T3240	--	
B18	⅝	16 O C	6⅛	20 -2	3	2 HOUR	--	
				20	53	UL 411	--	
B20	⅝"	16" O C	7¼	25 -6	NONE	NONE	--	
				20	N/A	N/A	N/A	
B22	⅝	16 O C	7¼	26 -7	3	NONE	--	
				20	47	N/A	N/A	
B24	⅝	16" O C	7¼	26 -1	3	1 HOUR	--	
				20	47	UL 465	--	
B26	⅝	16 O C	7⅞	26 -1	3	1½HR	-	
				20	50	OSU T3240	--	
B28	⅝"	16' O C	8½	28 -6"	3	2 HOUR	--	
				20	53	UL 411	--	
B30	⅝	16 O C	8⅝	28 -6	3	4 HOUR	NON LOAD BEARING	
				20	53	UL 263 UH19	--	
B32	⅝"	16 O C	7⅞	20 -2	3	3 HOUR	NON LOAD BEARING	
				20	53	UL 420	--	
B34	⅝	16" O C	9¼	20 -2	8	N A.	'C' WALL SUPPORT	
				20	N A.	N A.	--	

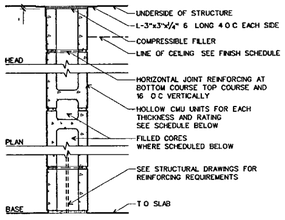

TYPE	NOMINAL SIZE	ACTUAL SIZE	WIDTH	MAX HEIGHT	INSUL GAUGE	FIRE RATING STC RATING	FIRE RATING TEST DESIGN	REMARKS
A00	4	3⅝	3⅝"	12 0"	NONE	NONE	NON-LOAD BEARING	
				N/A	N/A	N/A	N/A	
A10	6	5⅝	5⅝"	18 0"	NONE	NONE	NON-LOAD BEARING	
				N/A	N/A	N/A	N/A	
A12	6	5⅝	5⅝"	18 0"	NONE	1 HOUR	NON LOAD BEARING	
				N/A	N/A	U906	--	
A14	6	5⅝	5⅝	18'-0	NONE	2 HOUR	NON-LOAD BEARING	
				N/A	N/A	U906	--	
A20	8	7⅝	7⅝	24 -0"	NONE	NONE	NON-LOAD BEARING	
				N/A	N/A	N/A	N/A	
A22	8	7⅝	7⅝	24 0"	NONE	1 HOUR	NON LOAD BEARING	
				N/A	N/A	U905	--	
A24	8	7⅝"	7⅝"	24 0"	NONE	2 HOUR	NON LOAD BEARING	
				N/A	N/A	U905	SEE STRUCTURAL DRAWING BOOK FOR TYPICAL DETAILS	
A26	8	7⅝	7⅝	24 -0	NONE	3 HOUR	NON-LOAD BEARING	
				N/A	N/A	U904	-	
A28	8	7⅝"	7⅝"	24 -0"	NONE	4 HOUR	NON-LOAD BEARING	
				N/A	N/A	U901	SEE STRUCTURAL DRAWING BOOK FOR TYPICAL DETAILS	

F APPLIED FURRING
SCALE 1½" = 1'-0"

E FURRING WALL
SCALE 1½" = 1'-0"

D SHAFT WALL
SCALE 1½" = 1'-0"

C CHASE WALL
SCALE 1½" = 1'-0"

B STUD WALL
SCALE 1½" = 1'-0'

A CMU WALL
SCALE 1½" = 1'-0"

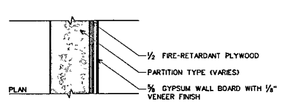

GW ADDITIONAL CONSTRUCTION FOR GALLERY WALL TYPES
SCALE 1½ = 1'-0"

GENERAL NOTES

1. SEE PARTITION DETAIL DRAWING XXXX AND PROJECT SPECIFICATIONS FOR SEISMIC DETAILS AND PERFORMANCE CRITERIA FOR ALL STUD AND MASONRY PARTITIONS

2 INSTALL CEMENTITIOUS BACKER BOARD IN LIEU OF GYPSUM WALL BOARD AT LOCATIONS INDICATED TO RECEIVE WALL TILE

3 INSTALL WATER RESISTANT GYPSUM WALL BOARD AT SURFACES IN TOILET ROOMS JANITORS CLOSETS AND SIMILAR WET AREAS NOT INDICATED TO RECEIVE WALL TILE

4 INSTALL TYPE 'X' FIRE RATED GWB AT ALL FIRE RATED PARTITIONS

5 INSTALL "BLUEBOARD" GYPSUM WALL BOARD AT PARTITIONS INDICATED TO RECEIVE VENEER PLASTER

6 STC RATINGS PROVIDE ONLY A GENERAL INDICATION OF ACOUSTIC PERFORMANCE UNDER LABORATORY TEST CONDITIONS CONSTRUCTION DETAILS DESCRIBED IN THE DRAWINGS AND SPECIFICATIONS DEFINE THE SPECIFIC REQUIREMENTS FOR THE WORK

7 EXTRA LAYER OF GYPSUM WALL BOARD AT ASYMMETRICAL PARTITIONS IS TO BE INSTALLED ON SIDE OF PARTITION WHICH TYPE KEY IS SHOWN

WILLIAM J CLINTON PRESIDENTIAL CENTER

LITTLE ROCK, ARKANSAS

Architect

POLSHEK PARTNERSHIP LLP
320 West 13th Street
New York, New York 10014
212.807 7171

Coordinating Architects

POLK STANLEY YEARY ARCHITECTS Ltd
700 South Schiller Street
Little Rock Arkansas 72201
501 378 0878

WITSELL EVANS RASCO
901 West Third Street
Little Rock, Arkansas 72201
501 374 5300

WOODS CARADINE ARCHITECTS
2200 South Main Street
Little Rock, Arkansas 72206
501 374 4060

Landscape Architects

HARGREAVES ASSOCIATES
118 Magazine Street
Cambridge Massachusetts 02139
617 661 0070

LANDSCAPE ARCHITECTURE Inc.
2300 Cottondale Lane Suite 202
Little Rock Arkansas 72202
501 374 5610

Structural Engineer

LESLIE E ROBERTSON ASSOC RLLP
30 Broad Street, 47th Floor
New York, New York 10004
212 750 9000

MEP Engineers

FLACK + KURTZ Inc.
475 Fifth Avenue
New York, New York 10017
212 532.9600

CROMWELL ARCHITECTS ENGINEERS
101 South Spring Street
Little Rock, Arkansas 72201
501 372 2900

Curtainwall Consultant

R. A. HEINTGES ARCHITECTS
126 Fifth Avenue, 9th Floor
New York New York 10011
212 652-2966

Seal

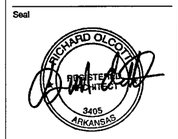

Issue	Date
100% Construction Documents	09/27/02
90% Progress Printing	08/30/02
100% Struct./CD Progress	07/01/02
100% Design Development	03/01/02

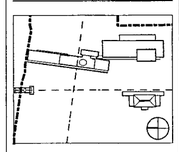

Job No 9908

Scale AS NOTED

Date September 27 2002

Title PARTITION TYPES

Sheet No A400

FOR OFFICIAL USE ONLY

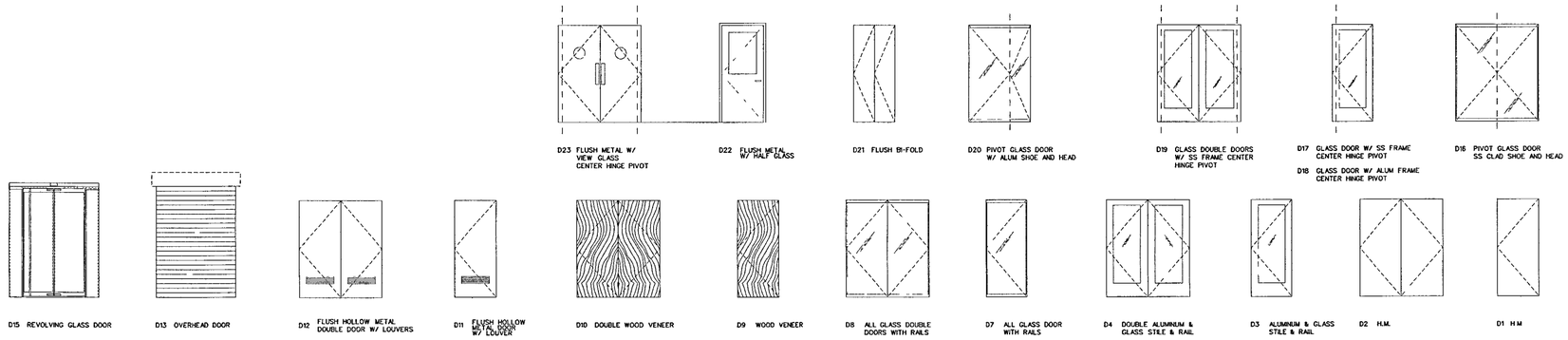

DOOR TYPES

SCALE 1/4" 1'-0"

DOORTYPES DGN 40

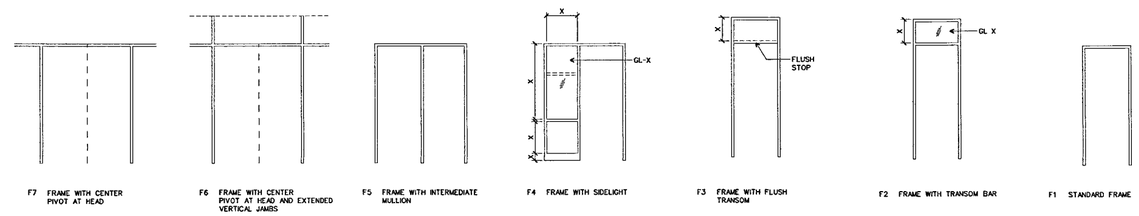

DOOR FRAME TYPES: HOLLOW METAL AND WOOD

SCALE 1/4" =1'-0'

DOORTYPES DGN 30

WILLIAM J CLINTON PRESIDENTIAL CENTER

LITTLE ROCK, ARKANSAS

Architect

POLSHEK PARTNERSHIP LLP
320 West 13th Street
New York New York 10014
212 807 7171

Coordinating Architects

POLK STANLEY YEARY ARCHITECTS Ltd
700 South Schiller Street
Little Rock Arkansas 72201
501 378 0878

WITSELL EVANS RASCO
901 West Third Street
Little Rock, Arkansas 72201
501 374 5300

WOODS CARADINE ARCHITECTS
2200 South Main Street
Little Rock, Arkansas 72206
501 374 4060

Landscape Architects

HARGREAVES ASSOCIATES
118 Magazine Street
Cambridge Massachusetts 02139
617 661 0070

LANDSCAPE ARCHITECTURE Inc.
2300 Cottondale Lane Suite 202
Little Rock, Arkansas 72202
501 374 5610

Structural Engineer

LESLIE E. ROBERTSON ASSOC., RLLP
30 Broad Street, 47th Floor
New York, New York 10004
212.750 9000

MEP Engineers

FLACK + KURTZ Inc.
475 Fifth Avenue
New York, New York 10017
212 532 9600

CROMWELL ARCHITECTS ENGINEERS
101 South Spring Street
Little Rock Arkansas 72201
501 372.2900

Curtainwall Consultant

R. A. HEINTGES ARCHITECTS
126 Fifth Avenue, 9th Floor
New York, New York 10011
212.652-2966

Seal

Issue	Date
100% Construction Documents	09/27/02
90% Progress Printing*	06/30/02
100% Struct./ CD Progress*	07/01/02
100% Design Development*	03/01/02

*Issued Formerly as A402

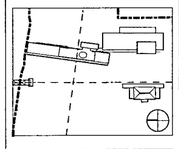

Job No 9908

Scale AS NOTED

Date September 27, 2002

Title DOOR TYPES

Sheet No A401

FOR OFFICIAL USE ONLY

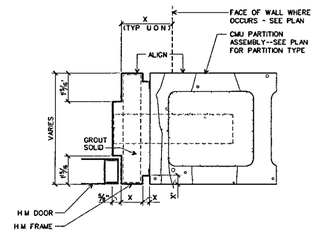

JAMB DETAIL (HEAD SIM.) 31
3" = 1'-0" D-doors dgn

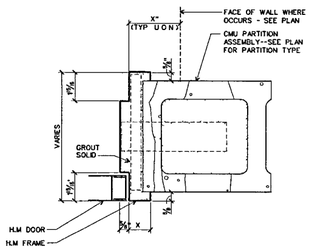

JAMB DETAIL (HEAD SIM.) 30
3" = 1'-0" D-doors dgn

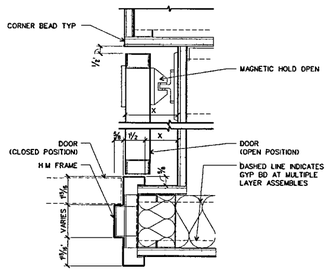

JAMB DETAIL @ HOLD OPEN DOOR 23
SCALE 3 " = 1'-0 D-doors dgn

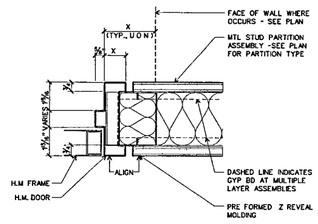

JAMB DETAIL (HEAD SIM.) 22
3" = 1'-0" D-doors dgn

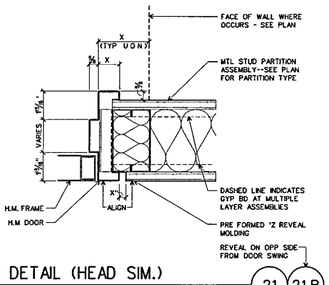

JAMB DETAIL (HEAD SIM.) 21 21.B
3" = 1'-0" D-doors dgn

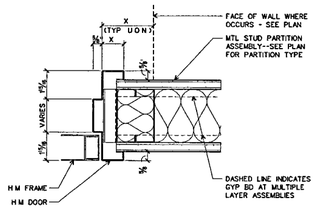

JAMB DETAIL (HEAD SIM.) 20
3" = 1'-0" D-doors dgn

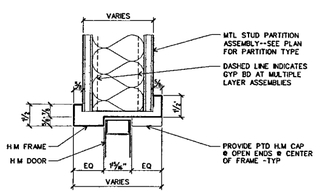

HEAD DETAIL
DOUBLE ACTING DOOR 14
SCALE 3 " = 1-0 D-doors dgn

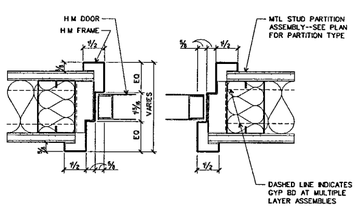

JAMB DETAIL
DOUBLE ACTING DOOR 13
SCALE 3 " = 1-0 D-doors dgn

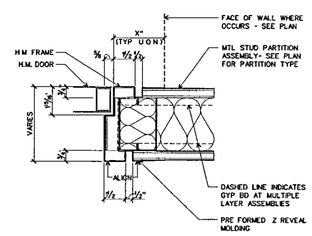

JAMB DETAIL (HEAD SIM)
FLUSH BOTH SIDES 12
SCALE 3 = 1-0 D-doors dgn

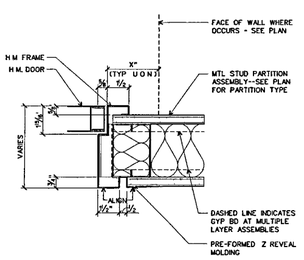

JAMB DETAIL (HEAD SIM)
FLUSH ONE SIDE 11
SCALE 3 = 1-0 D-doors dgn

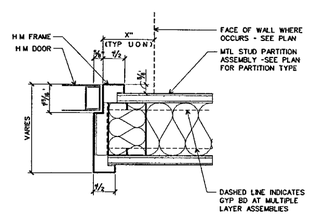

JAMB DETAIL (HEAD SIM) 10
SCALE 3 = 1-0 D-doors dgn

WILLIAM J CLINTON PRESIDENTIAL CENTER

LITTLE ROCK, ARKANSAS

Architect

POLSHEK PARTNERSHIP LLP
320 West 13th Street
New York, New York 10014
212.807 7171

Coordinating Architects

POLK STANLEY YEARY ARCHITECTS Ltd
700 South Schiller Street
Little Rock Arkansas 72201
501 378 0878

WITSELL EVANS RASCO
901 West Third Street
Little Rock, Arkansas 72201
501 374 5300

WOODS CARADINE ARCHITECTS
2200 South Main Street
Little Rock Arkansas 72206
501 374 4060

Landscape Architects

HARGREAVES ASSOCIATES
118 Magazine Street
Cambridge Massachusettes 02139
617 661 0070

LANDSCAPE ARCHITECTURE Inc
2300 Cottondale Lane Suite 202
Little Rock Arkansas 72202
501 374 5610

Structural Engineer

LESLIE E. ROBERTSON ASSOC RLLP
30 Broad Street, 47th Floor
New York, New York 10004
212 750 9000

MEP Engineers

FLACK + KURTZ Inc.
475 Fifth Avenue
New York, New York 10017
212 532 9600

CROMWELL ARCHITECTS ENGINEERS
101 South Spring Street
Little Rock, Arkansas 72201
501 372.2900

Curtainwall Consultant

R. A. HEINTGES ARCHITECTS
126 Fifth Avenue, 9th Floor
New York, New York 10011
212.652-2966

Seal

Issue	Date
100% Construction Documents*	09/27/02

*New Sheet: Former A402 renamed A401

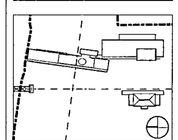

Job No 9908

Scale AS NOTED

Date September 27, 2002

Title DOOR DETAILS

Sheet No A402

FOR OFFICIAL USE ONLY

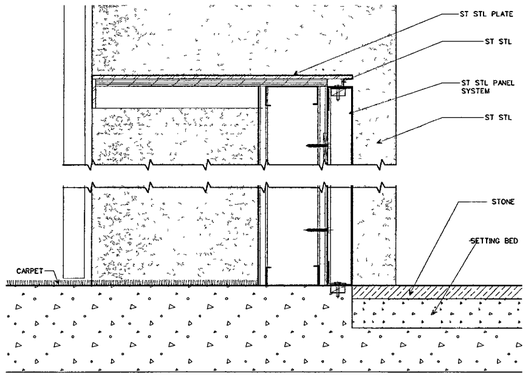

SHELF/SILL DETAIL COAT ROOM (42)
SCALE 3 " = 1-0 d-door06 dgn

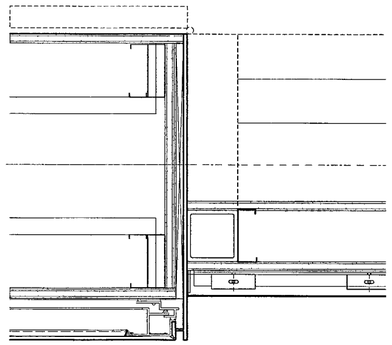

JAMB DETAIL COAT ROOM (41)
SCALE 3 " = 1-0 d-door06 dgn

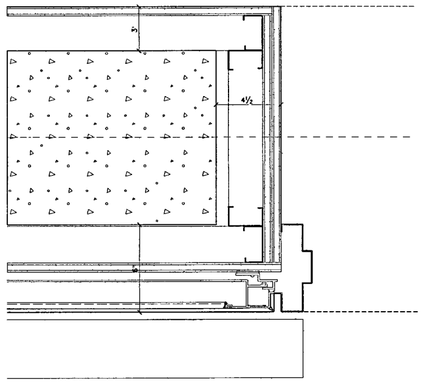

JAMB DETAIL FREIGHT ELEV. VEST (40)
SCALE 3 " = 1'-0" d-door05 dgn

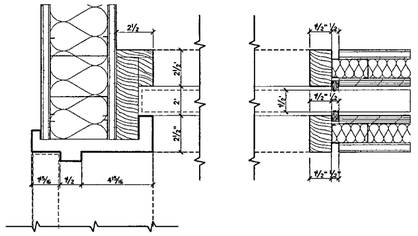

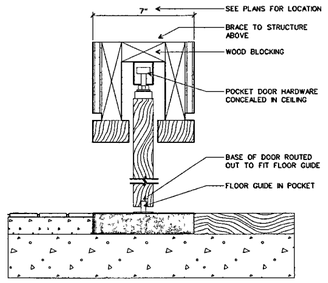

HEAD/SILL DETAIL POCKET DOOR (32)
SCALE 3 " = 1-0 d-door04 dgn

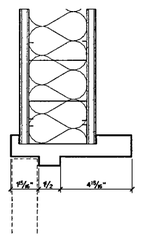

HEAD DETAIL STAIR 2 (31)
SCALE 3 " = 1-0 d-door03 dgn

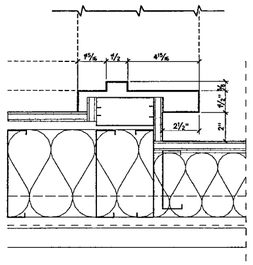

JAMB DETAIL POCKET DOOR (NORTH CORE BATHROOM) (30)
SCALE 3 " = 1-0' d-door04 dgn

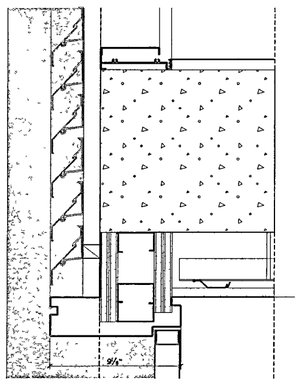

HEAD DETAIL - STAIR 4 (14)
SCALE 3 " = 1-0" d-door01 dgn

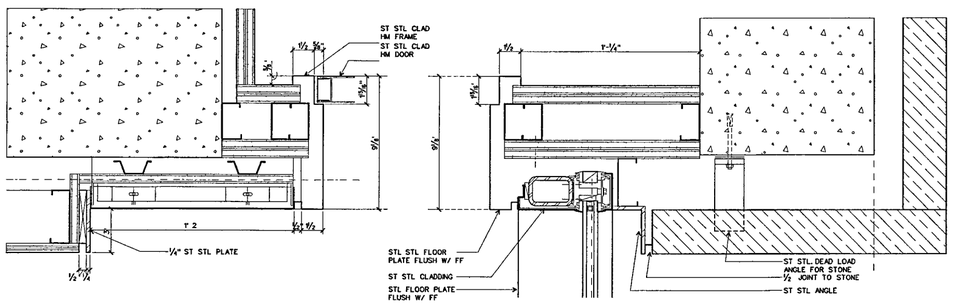

JAMB DETAIL - STAIR 4: HEAD SIM. (11)
SCALE 3" = 1-0" d-door01 dgn

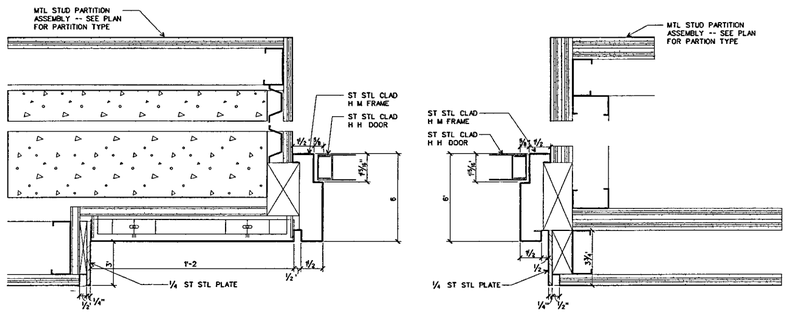

JAMB DETAIL - STAIR 6, HEAD SIM. (10)
SCALE 3 " = 1-0 d-door01 dgn

WILLIAM J CLINTON PRESIDENTIAL CENTER

LITTLE ROCK, ARKANSAS

Architect

POLSHEK PARTNERSHIP LLP
320 West 13th Street
New York, New York 10014
212 807 7171

Coordinating Architects

POLK STANLEY YEARY ARCHITECTS Ltd
700 South Schiller Street
Little Rock Arkansas 72201
501 378 0878

WITSELL EVANS RASCO
901 West Third Street
Little Rock, Arkansas 72201
501 374 5300

WOODS CARADINE ARCHITECTS
2200 South Main Street
Little Rock Arkansas 72206
501 374 4060

Landscape Architects

HARGREAVES ASSOCIATES
118 Magazine Street
Cambridge Massachusettes 02139
617.661 0070

LANDSCAPE ARCHITECTURE, Inc.
2300 Cottondale Lane Suite 202
Little Rock, Arkansas 72202
501.374 5610

Structural Engineer

LESLIE E. ROBERTSON ASSOC , RLLP
30 Broad Street, 47th Floor
New York, New York 10004
212.750 9000

MEP Engineers

FLACK + KURTZ Inc.
475 Fifth Avenue
New York, New York 10017
212 532 9600

CROMWELL ARCHITECTS ENGINEERS
101 South Spring Street
Little Rock Arkansas 72201
501 372 2900

Curtainwall Consultant

R. A. HEINTGES ARCHITECTS
128 Fifth Avenue, 6th Floor
New York New York 10011
212 652-2966

Seal

Issue	Date
100% Construction Documents	09/27/02
90% Progress Printing	08/30/02

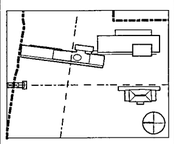

Job No 9908

Scale AS NOTED

Date September 27, 2002

Title

DOOR DETAILS

Sheet No

A403

FOR OFFICIAL USE ONLY

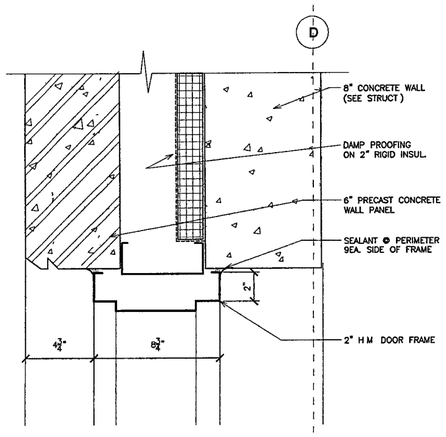

HEAD DETAIL (33)
SCALE. 3" = 1'-0"

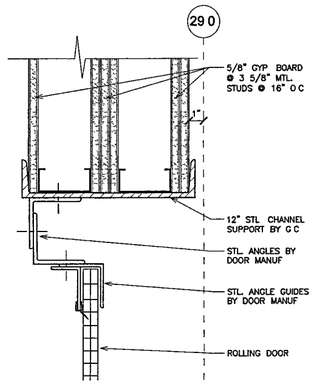

JAMB DETAIL (32)
SCALE. 3" = 1'-0"

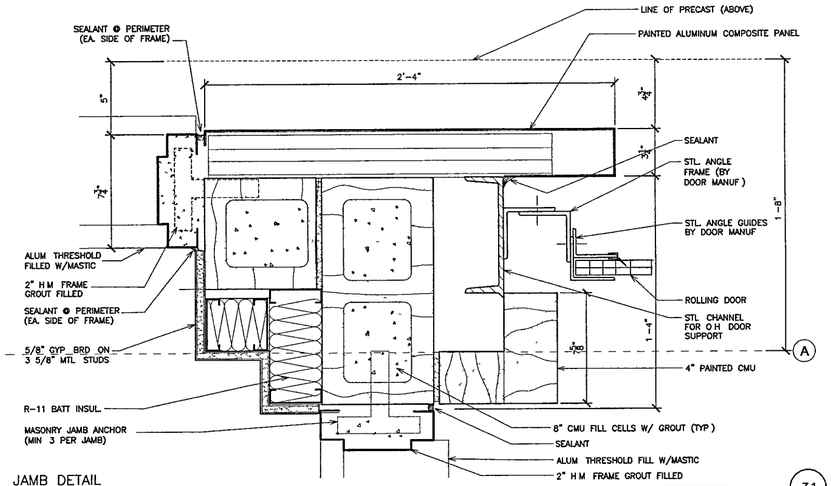

JAMB DETAIL (31)
SCALE. 3" = 1'-0"

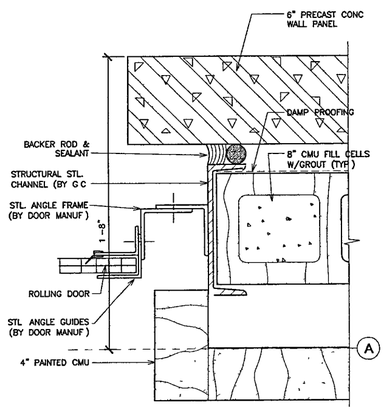

JAMB DETAIL (30)
SCALE. 3" = 1'-0"

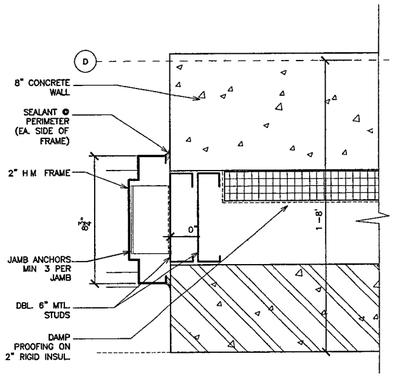

JAMB DETAIL (24)
SCALE. 3" = 1'-0"

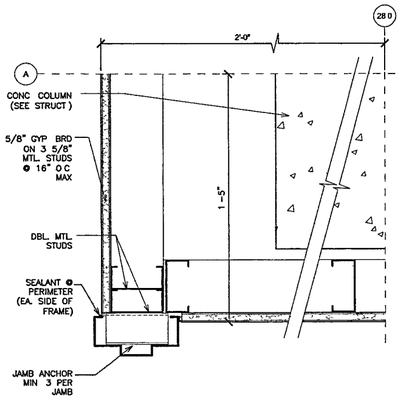

JAMB DETAIL (23)
SCALE. 3" = 1'-0"

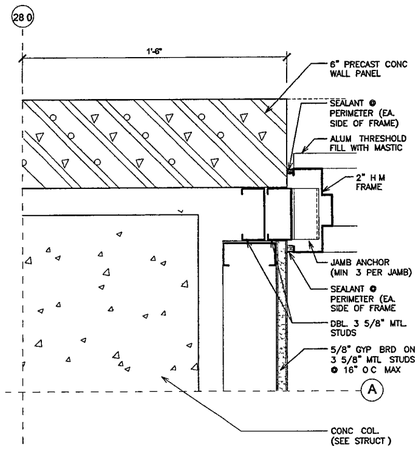

JAMB DETAIL (22)
SCALE. 3" = 1-0"

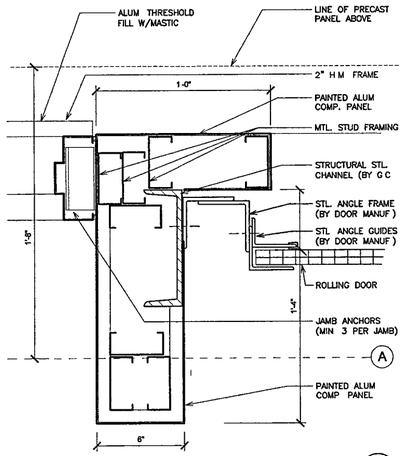

JAMB DETAIL (21)
SCALE. 3" = 1'-0"

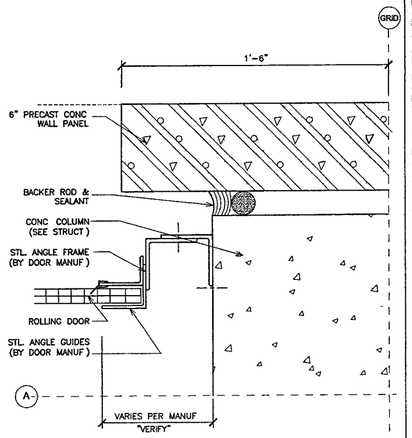

JAMB DETAIL (20)
SCALE. 3" = 1-0"

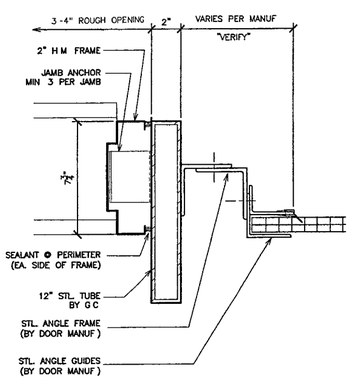

JAMB DETAIL (14)
SCALE. 3" = 1'-0"

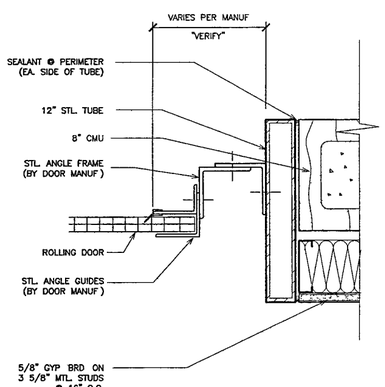

JAMB DETAIL (13)
SCALE 3" = 1'-0"

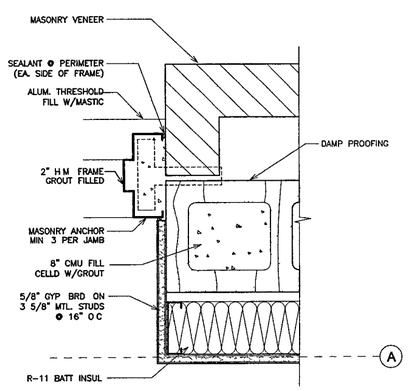

JAMB DETAIL (12)
SCALE 3" = 1'-0"

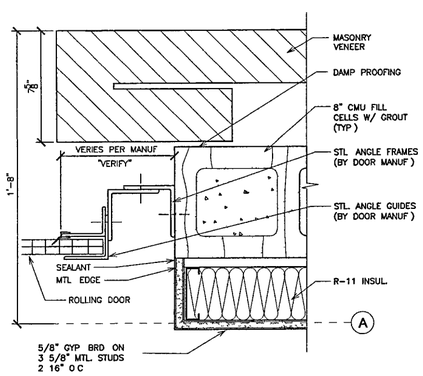

JAMB DETAIL (11)
SCALE 3" = 1'-0"

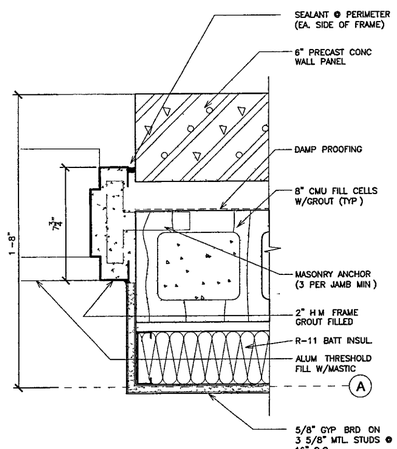

JAMB DETAIL (10)
SCALE. 3" = 1'-0"

WILLIAM J. CLINTON PRESIDENTIAL CENTER

LITTLE ROCK, ARKANSAS

Architect
POLSHEK PARTNERSHIP LLP
320 West 13th Street
New York, New York 10014
212 807 7171

Coordinating Architects
POLK STANLEY YEARY ARCHITECTS Ltd
700 South Schiller Street
Little Rock, Arkansas 72201
501.378 0878

WITSELL EVANS RASCO
901 West Third Street
Little Rock, Arkansas 72201
501 374 5300

WOODS CARADINE ARCHITECTS
2200 South Main Street
Little Rock, Arkansas 72206
501 374 4060

Landscape Architects
HARGREAVES ASSOCIATES
118 Magazine Street
Cambridge, Massachusettes 02139
617 661 0070

LANDSCAPE ARCHITECTURE Inc.
2300 Cottondale Lane Suite 202
Little Rock, Arkansas 72202
501.374 5610

Structural Engineer
LESLIE E. ROBERTSON ASSOC , RLLP
30 Broad Street, 47th Floor
New York, New York 10004
212 750.9000

MEP Engineers
FLACK + KURTZ Inc
475 Fifth Avenue
New York, New York 10017
212 532 9600

CROMWELL ARCHITECTS ENGINEERS
101 South Spring Street
Little Rock, Arkansas 72201
501 372.2900

Curtainwall Consultant
R. A. HEINTGES ARCHITECTS
126 Fifth Avenue, 9th Floor
New York, New York 10011
212 652-2966

Seal

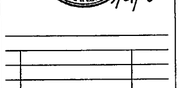

Issue	Date
100% Construction Documents	09/27/02
90% Progress Printing	08/30/02

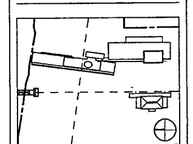

Job No 9908

Scale

Date SEPTEMBER 27, 2002

Title DOOR DETAILS

Sheet No A404

FOR OFFICIAL USE ONLY

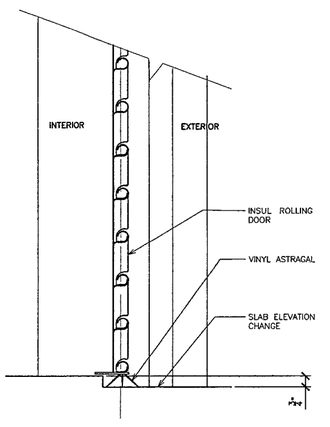

SILL DETAIL @ OVERHAED DOOR (23)
SCALE 1 1/2" = 1'-0"

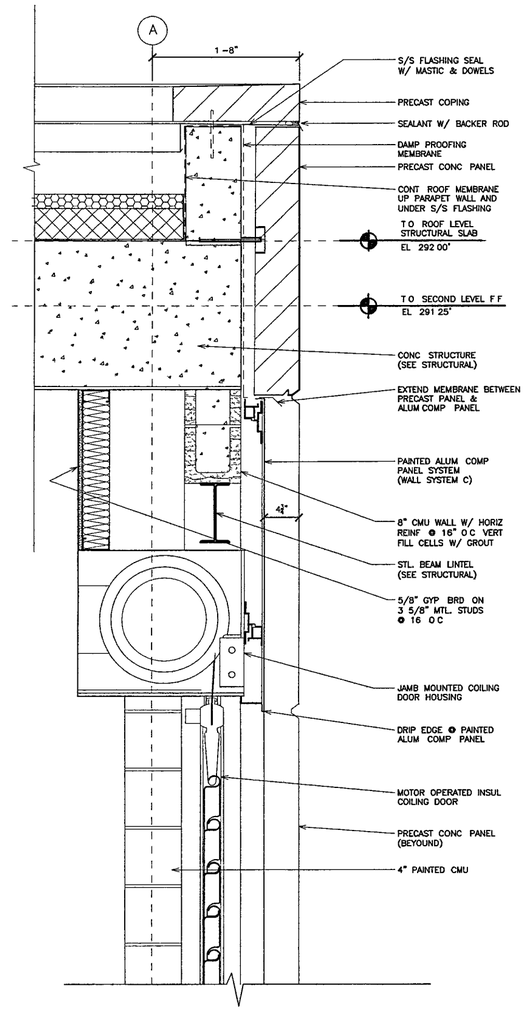

HEAD DETAIL @ OVERHAED DOOR (22)
SCALE 1 1/2" = 1'-0"

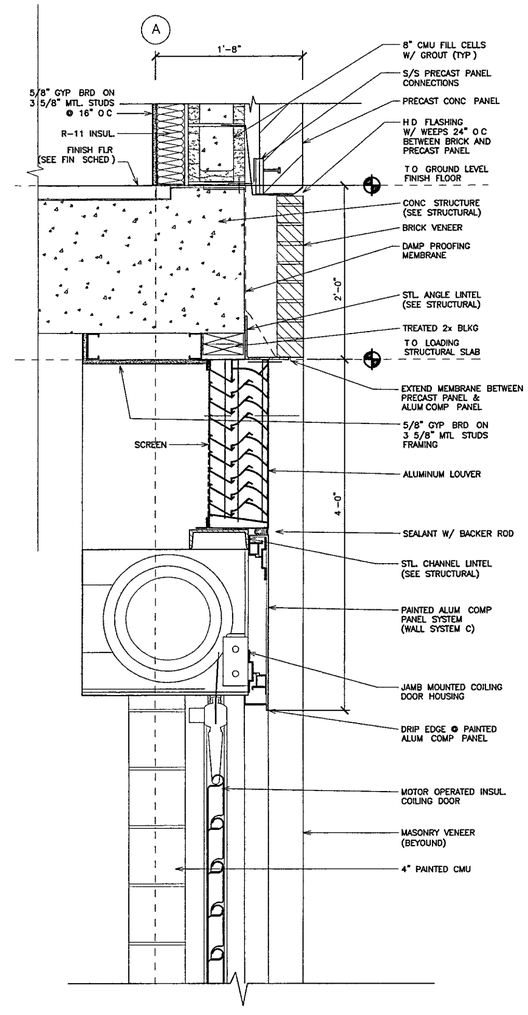

HEAD DETAIL @ OVERHAED DOOR (21)
SCALE 1 1/2" = 1'-0"

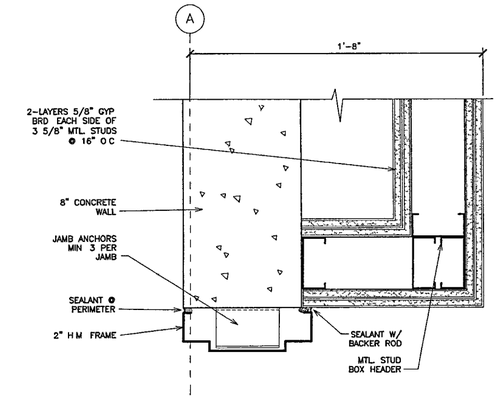

HEAD DETAIL (30)
SCALE 1 1/2" = 1'-0"

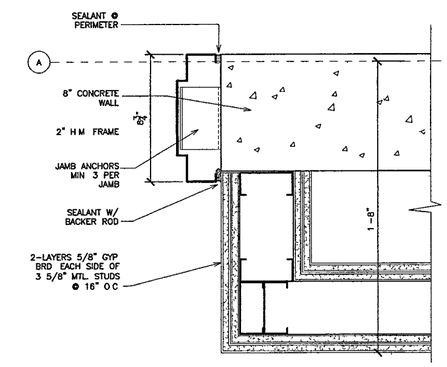

JAMB DETAIL (20)
SCALE 1 1/2" = 1'-0"

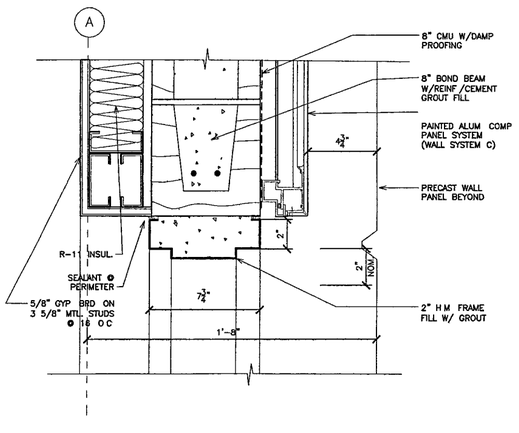

HEAD DETAIL (13)
SCALE 1 1/2" = 1'-0"

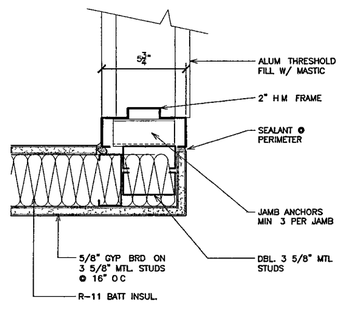

JAMB DETAIL (12)
SCALE 1 1/2" = 1'-0"

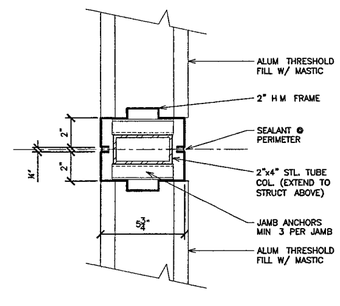

JAMB DETAIL (11)
SCALE 1 1/2" = 1'-0"

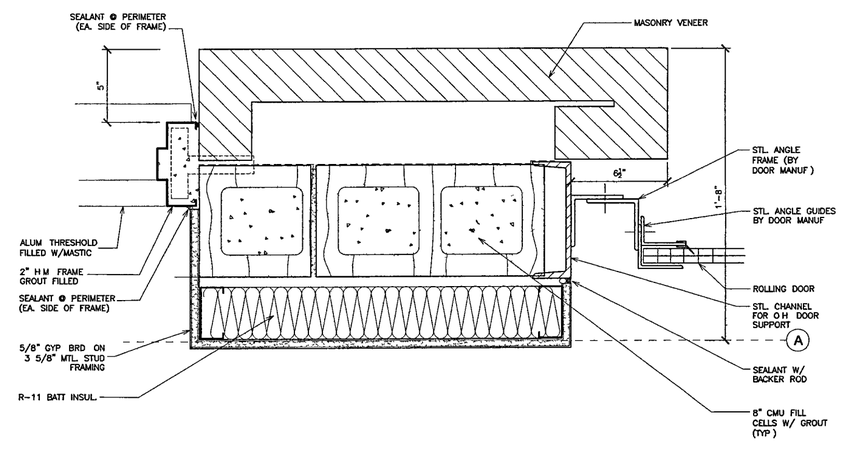

JAMB DETAIL (10)
SCALE 3" = 1'-0"

WILLIAM J. CLINTON PRESIDENTIAL CENTER

LITTLE ROCK, ARKANSAS

Architect
POLSHEK PARTNERSHIP LLP
320 West 13th Street
New York, New York 10014
212 807 7171

Coordinating Architects
POLK STANLEY YEARY ARCHITECTS Ltd
700 South Schiller Street
Little Rock, Arkansas 72201
501 378 0878

WITSELL EVANS RASCO
901 West Third Street
Little Rock, Arkansas 72201
501 374 5300

WOODS CARADINE ARCHITECTS
2200 South Main Street
Little Rock, Arkansas 72206
501 374 4060

Landscape Architects
HARGREAVES ASSOCIATES
118 Magazine Street
Cambridge, Massachusettes 02139
617 661 0070

LANDSCAPE ARCHITECTURE, Inc
2300 Cottondale Lane Suite 202
Little Rock, Arkansas 72202
501.374 5610

Structural Engineer
LESLIE E. ROBERTSON ASSOC., RLLP
30 Broad Street, 47th Floor
New York, New York 10004
212.750 9000

MEP Engineers
FLACK + KURTZ Inc.
475 Fifth Avenue
New York, New York 10017
212.532 9600

CROMWELL ARCHITECTS ENGINEERS
101 South Spring Street
Little Rock, Arkansas 72201
501 372.2900

Curtainwall Consultant
R. A. HEINTGES ARCHITECTS
126 Fifth Avenue 9th Floor
New York, New York 10011
212 652-2966

Issue	Date
100% Construction Documents	09/27/02
90% Progress Printing	08/30/02

Job No 9908
Scale
Date SEPTEMBER 27 2002
Title DOOR DETAILS
Sheet No A405

FOR OFFICIAL USE ONLY

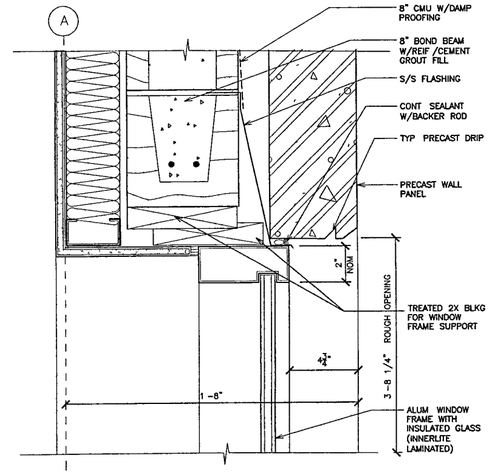

WINDOW HEAD DETAIL (30)

SCALE 1 1/2" = 1'-0"

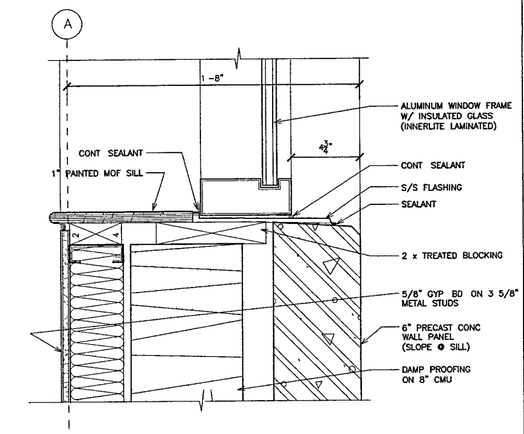

WINDOW SILL DETAIL (20)

SCALE. 1 1/2" = 1'-0"

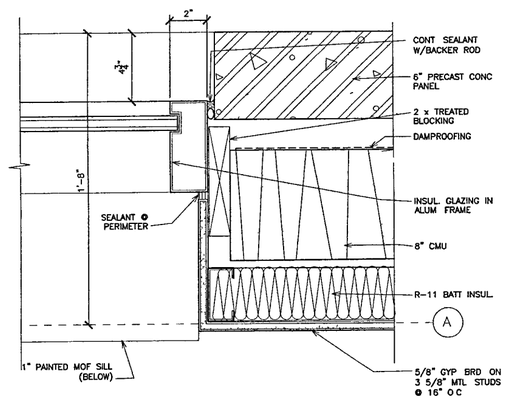

WINDOW JAMB DETAIL (10)

SCALE 1 1/2" = 1'-0"

WILLIAM J. CLINTON PRESIDENTIAL CENTER

LITTLE ROCK, ARKANSAS

Architect

POLSHEK PARTNERSHIP LLP
320 West 13th Street
New York, New York 10014
212.807 7171

Coordinating Architects

POLK STANLEY YEARY ARCHITECTS Ltd
700 South Schiller Street
Little Rock, Arkansas 72201
501 378 0878

WITSELL EVANS RASCO
901 West Third Street
Little Rock, Arkansas 72201
501 374 5300

WOODS CARADINE ARCHITECTS
2200 South Main Street
Little Rock, Arkansas 72206
501 374.4060

Landscape Architects

HARGREAVES ASSOCIATES
118 Magazine Street
Cambridge, Massachusettes 02139
617 661 0070

LANDSCAPE ARCHITECTURE Inc.
2300 Cottondale Lane Suite 202
Little Rock, Arkansas 72202
501 374 5610

Structural Engineer

LESLIE E ROBERTSON ASSOC , RLLP
30 Broad Street, 47th Floor
New York, New York 10004
212 750 9000

MEP Engineers

FLACK + KURTZ Inc.
475 Fifth Avenue
New York, New York 10017
212.532.9600

CROMWELL ARCHITECTS ENGINEERS
101 South Spring Street
Little Rock, Arkansas 72201
501 372.2900

Curtainwall Consultant

R. A. HEINTGES ARCHITECTS
126 Fifth Avenue, 9th Floor
New York, New York 10011
212 652-2966

Issue	Date
100% Construction Documents	09/27/02
90% Progress Printing	08/30/02

Job No 9908

Scale

Date SEPTEMBER 27, 2002

Title DOOR / WINDOW DETAILS

Sheet No A406

FOR OFFICIAL USE ONLY

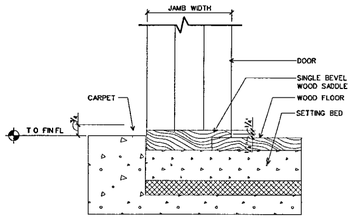

SILL DETAIL - CARPET/WOOD FLOOR (44)
SCALE 3 - 1-0 d-door02 dgn

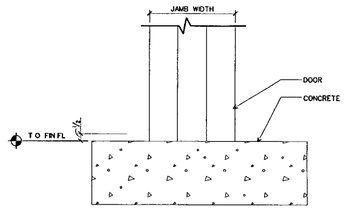

SILL DETAIL - CONCRETE/CONCRETE (43)
SCALE 3' - 1'-0" d-door02 dgn

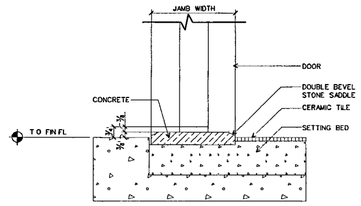

SILL DETAIL - CONCRETE/CERAMIC TILE (42)
SCALE 3" - 1-0 d-door02 dgn

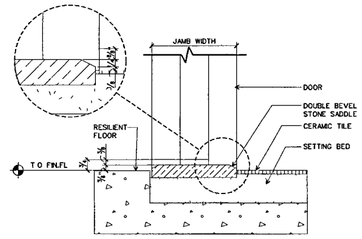

SILL DETAIL - RUBBER FL./CERAMIC TILE (41)
SCALE 3" - 1'-0" d-door02 dgn

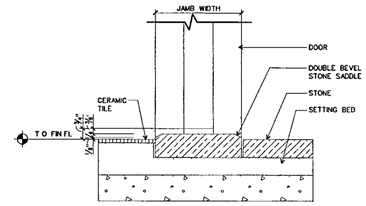

SILL DETAIL - CERAMIC TILE/STONE (40)
SCALE 3 - 1-0 d-door02 dgn

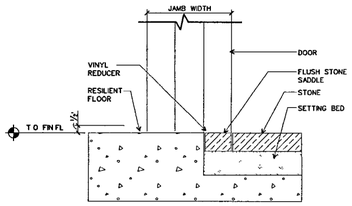

SILL DETAIL - RUBBER FL./STONE (34)
SCALE 3' - 1'-0 d-door02 dgn

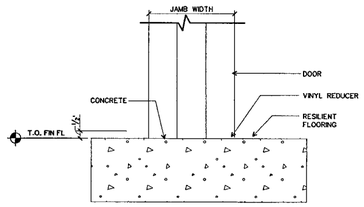

SILL DETAIL - CONC./RUBBER FLOORING (33)
SCALE 3' - 1'-0' d-door02 dgn

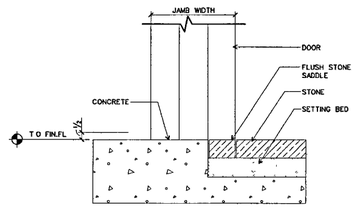

SILL DETAIL - CONCRETE/STONE (32)
SCALE 3" - 1-0 d-door02 dgn

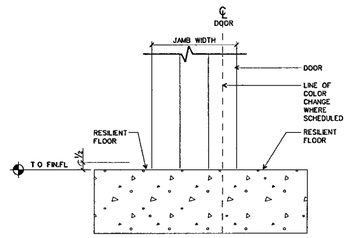

SILL DETAIL - RUBBER FL./RUBBER FL. (31)
SCALE 3" - 1-0 d-door02 dgn

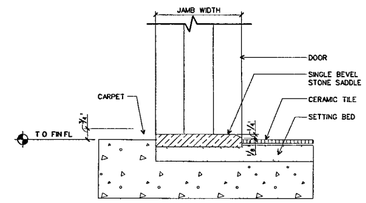

SILL DETAIL - CARPET/CERAMIC TILE (30)
SCALE 3 - 1-0' d-door02 dgn

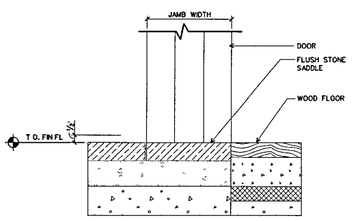

SILL DETAIL - WOOD/STONE (24)
SCALE 3 - 1-0' d-door02 dgn

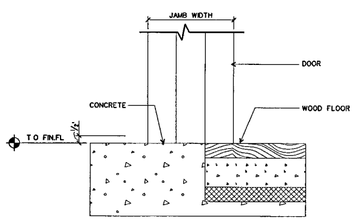

SILL DETAIL - CONCRETE/WOOD FLOOR (23)
SCALE 3 - 1-0 d-door02 dgn

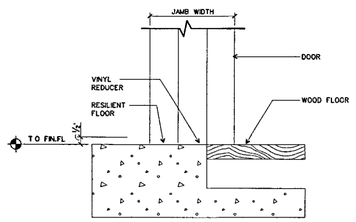

SILL DETAIL - RUBBER FL./WOOD FL. (22)
SCALE 3' - 1'-0' d-door02 dgn

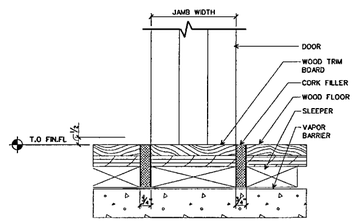

SILL DETAIL - WOOD/WOOD (21)
SCALE 3' - 1-0 d-door02 dgn

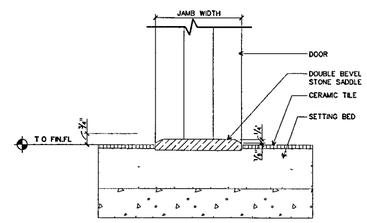

SILL DETAIL - CERAMIC TILE/CERAMIC TILE (20)
SCALE 3 - 1-0" d door02 dgn

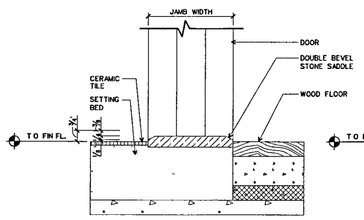

SILL DETAIL - CERAMIC TILE/WOOD (14)
SCALE 3' - 1-0 d-door02 dgn

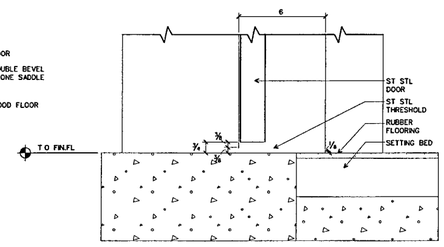

SILL DETAIL - STAIR 4,5 (11)
SCALE 3" - 1'-0" d-door02 dgn

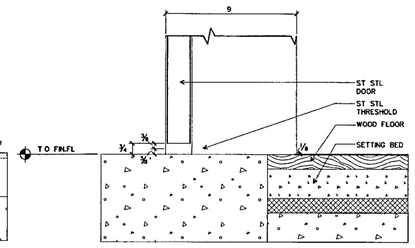

SILL DETAIL - STAIR 4,5 (10)
SCALE 3' - 1'-0' d-door02 dgn

WILLIAM J CLINTON PRESIDENTIAL CENTER

LITTLE ROCK, ARKANSAS

Architect

POLSHEK PARTNERSHIP LLP
320 West 13th Street
New York, New York 10014
212 807 7171

Coordinating Architects

POLK STANLEY YEARY ARCHITECTS Ltd
700 South Schiller Street
Little Rock, Arkansas 72201
501 378 0878

WITSELL EVANS RASCO
901 West Third Street
Little Rock, Arkansas 72201
501 374 5300

WOODS CARADINE ARCHITECTS
2200 South Main Street
Little Rock Arkansas 72206
501 374 4060

Landscape Architects

HARGREAVES ASSOCIATES
118 Magazine Street
Cambridge Massachusettos 02139
617 661 0070

LANDSCAPE ARCHITECTURE, Inc.
2300 Cottondale Lane Suite 202
Little Rock, Arkansas 72202
501 374 5610

Structural Engineer

LESLIE E. ROBERTSON ASSOC., RLLP
30 Broad Street, 47th Floor
New York, New York 10004
212.750 9000

MEP Engineers

FLACK + KURTZ Inc.
475 Fifth Avenue
New York New York 10017
212 532 9600

CROMWELL ARCHITECTS ENGINEERS
101 South Spring Street
Little Rock, Arkansas 72201
501 372 2900

Curtainwall Consultant

R. A. HEINTGES ARCHITECTS
128 Fifth Avenue, 9th Floor
New York New York 10011
212 652-2966

Seal

Issue	Date
100% Construction Documents*	09/27/02

*New Sheet. Former A407 renamed A409

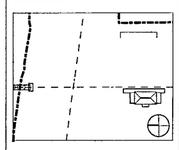

Job No 9908

Scale AS NOTED

Date September 27 2002

Title SILL DETAILS

Sheet No A407

FOR OFFICIAL USE ONLY

INTERIOR MATERIALS AND FINISH ABBREVIATIONS

ACT 1	ACOUSTICAL CEILING TILE TYPE 1 - (KITCHEN)
ACT 2	ACOUSTICAL CEILING TILE TYPE 2 - (GENERAL)
ACT 3	ACOUSTICAL CEILING TILE TYPE 3 - (RESTROOMS)
ACT-4	ACOUSTICAL CEILING TILE TYPE 4
ACP 1	ACCOUSTICAL CEILING PANEL - PERFORATED PAINTED ALUMINUM COMPOSITE PANEL
ACP 2	ACOUSTICAL CEILING PANEL - PERFORATED ALUMINUM
ACP-2a	ACOUSTICAL CEILING PANEL - NON PERFORATED ALUMINUM
ACP-2b	ACOUSTICAL CEILING PANEL - PERFORATED ALUMINUM W/O ACOUSTICAL LINING
ACP-3	ACOUSTICAL CEILING PANEL - PERFORATED DECOUSTIC
ACP-4	ACOUSTICAL CEILING PANEL - PERFORATED WOOD (GREAT HALL)
ACP-5	ACOUSTICAL CEILING PANEL FIELD FINISHED MINERAL FIBER OVER GWB CEILING ASSEMBLY
ACP-6	ACOUSTICAL CEILING PANEL - PERFORATED S S ESCALATOR CLADDING
ACP 7	ACOUSTICAL CEILING PANEL BARRISOL
AG 1	ALUMINUM GRATING
CONC-1P	EXPOSED STRUCTURAL CONCRETE - PAINTED
CONC-2	ARCHITECTURAL PRECAST CONCRETE PANEL - WALL
CONC-3	SEALED CONCRETE FLOOR (ARCHIVE CORRIDOR)
CONC-4	6 X6 CONCRETE PAVER
CONC 5	POURED CONCRETE
CONC 6	SEALED CONCRETE FLOOR (UTILITY AREAS)
CPT 1	CARPET TYPE 1 - SUPPORT AREAS- BROADLOOM
CPT-1A	CARPET TYPE 1A - SUPPORT AREAS - TILE
CPT-2	CARPET TYPE 2 - ORIENTATION THEATER
CPT-3	CARPET TYPE 3 - EXHIBIT SPACES- BY OTHERS
CT-1	CERAMIC TILE - FLOOR (BATHROOMS)
CT 2	CERAMIC TILE - WALL (BATHROOMS)
CT-2A	CERAMIC TILE-WALL ACCENT (BATHROOMS)
CT 3	CERAMIC TILE - EXECUTIVE LEVEL BATHROOM FLOORS
CT-4	CERAMIC TILE - EXECUTIVE LEVEL BATHROOM WALLS
CTB 1	CERAMIC TILE BASE
CTB-2	CERAMIC TILE BASE - EXECUTIVE LEVEL
GL-1	GLASS TYPE 1 - LAMINATED GLASS RAILS
GL 2	GLASS TYPE 2 - INTERIOR STOREFRONT
GL 3	GLASS TYPE 3 - TRANSLUCENT INTERIOR STOREFRONT
GL 4	GLASS TYPE 4 INTERIOR STOREFRONT SPANDREL PANEL
GL 5	GLASS TYPE 5 - GFT SHOP
GWB P	GYPSUM WALL BOARD PAINTED
GWB PLAS	GYPSUM WALL BOARD -PLASTER FINISH (OVAL OFFICE)
MB	MARKER BOARD
MP 1	METAL PANEL - PAINTED ALUMINUM COMPOSITE PANEL
P	PAINT
P LAM-1	PLASTIC FINISH TYPE 1 - PLASTIC LAMINATE
QT-1	QUARRY TILE - FLOOR
QTB-1	QUARRY TILE - BASE
RB 1	RUBBER BASE - COVE
RB 1	RUBBERBASE- STRAIGHT
RDF	RAISED COMPUTER FLOOR
RF-1	RUBBER FLOOR
SS-L	STAINLESS STEEL LOUVRE
SS 1	STAINLESS STEEL
SS-2	STAINLESS STEEL TYPE 2- FOR BASE OF TRUSS
SS 3	NOT USED
SS 4	STAINLESS STEEL TYPE 4- D SYS
SS-5	STAINLESS STEEL PANEL SYSTEM
SSB-1	ST STL BASE
ST-1	STONE TYPE 1 - LIMESTONE (WALL)
ST 2	STONE TYPE 2 - MARBLE (FLOOR INT)
ST-2E	STONE TYPE 4 - MARBLE (FLOOR EXT)
ST 3	STONE TYPE 3 - 12 X 12 STRIPE
ST-3E	STONE TYPE 5 - 12 X 12 STRIPE
ST-4	STONE TYPE 6 (FLOOR-INT-HONED)
ST 5	STONE TYPE 7 - (COUNTERS @ PUBLIC BATHROOMS)
ST-6	STONE TYPE 8 - (COUNTERS @ EXECUTIVE LEVEL KITCHEN)
ST 7	STONE TYPE 9 - (COUNTERS @ EXECUTIVE LEVEL BATH)
STB-1	STONE BASE TYPE 1 (SAME STONE AS ST-2)
STB 2	STONE BASE TYPE 1 (SAME STONE AS ST-4)
WD 1 PERF	PERFORATED WOOD PANEL W/ ACOUSTICAL BACKING TYPE 1 (CAFE)
WD 2	WOOD PANEL TYPE 2 (GREAT HALL)
WD 2 PERF	PERFORATED WOOD PANEL W/ ACOUSTICAL BACKING TYPE 2 (GREAT HALL)
WD-3 PERF	PERFORATED WOOD PANEL W/ ACOUSTICAL BACKING TYPE 3 (ORIENTATION THEATER)
WDB-1	WOOD BASE TYPE 1
WDB-2	WOOD BASE TYPE 2 - GREAT HALL
WDB 3	WOOD BASE TYPE 3
WDB 4	WOOD BASE TYPE 4 PAINTED
WDF 1	BAMBOO FLOOR TONGUE & GROOVE
WDF 2	IPE INTERIOR FLOOR TONGUE & GROOVE
WDF-3	IPE EXTERIOR DECKING
WDF-4	WOOD FLOOR, TONGUE & GROOVE (EXECUTIVE LEVEL)

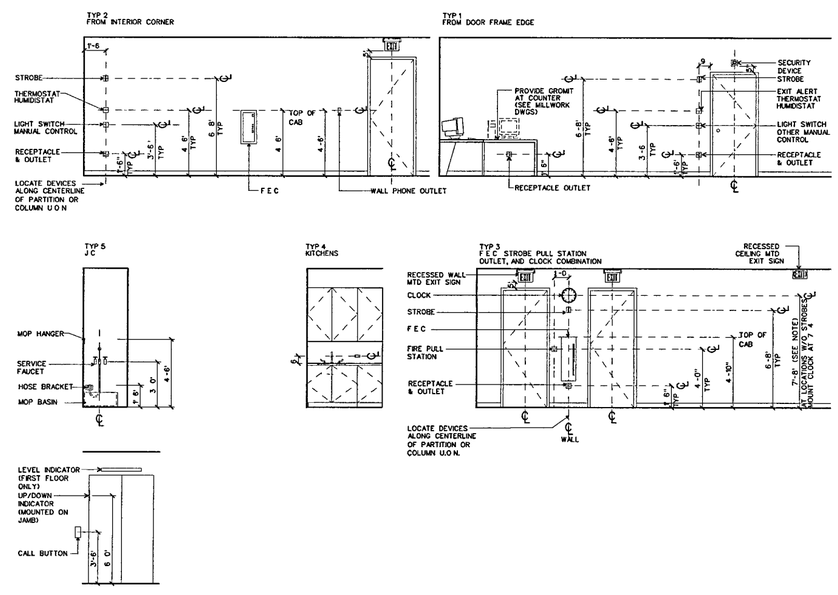

DEVICE MOUNTING HEIGHTS DIAGRAM

WILLIAM J CLINTON PRESIDENTIAL CENTER

LITTLE ROCK, ARKANSAS

Architect

POLSHEK PARTNERSHIP LLP
320 West 13th Street
New York New York 10014
212.807 7171

Coordinating Architects

POLK STANLEY YEARY ARCHITECTS Ltd
700 South Schiller Street
Little Rock, Arkansas 72201
501 378 0878

WITSELL EVANS RASCO
901 West Third Street
Little Rock Arkansas 72201
501 374 5300

WOODS CARADINE ARCHITECTS
2200 South Main Street
Little Rock, Arkansas 72206
501 374 4060

Landscape Architects

HARGREAVES ASSOCIATES
118 Magazine Street
Cambridge, Massachusettes 02139
617 661 0070

LANDSCAPE ARCHITECTURE Inc
2300 Cottondale Lane Suite 202
Little Rock, Arkansas 72202
501 374 5610

Structural Engineer

LESLIE E ROBERTSON ASSOC , RLLP
30 Broad Street, 47th Floor
New York New York 10004
212 750 9000

MEP Engineers

FLACK + KURTZ Inc.
475 Fifth Avenue
New York, New York 10017
212.532 9600

CROMWELL ARCHITECTS ENGINEERS
101 South Spring Street
Little Rock Arkansas 72201
501 372 2900

Curtainwall Consultant

R. A. HEINTGES ARCHITECTS
125 Fifth Avenue, 9th Floor
New York, New York 10011
212.652-2966

Seal

RICHARD OLCOTT REGISTERED ARCHITECT 3405 ARKANSAS

Issue	Date
100% Construction Documents	09/27/02
90% Progress Printing	08/30/02

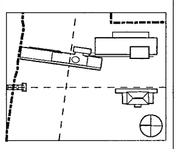

Job No 9908

Scale

Date September 27 2002

Title INTERIOR MATERIALS, FINISH ABBREV'S & DEVICE MOUNTING HGHTS

Sheet No A410

FOR OFFICIAL USE ONLY

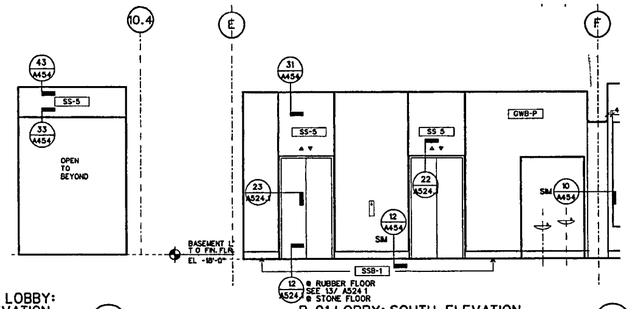

B-11 ELEV LOBBY: WEST ELEVATION (53) — base/elev/b-inel11 dgn

B-01 LOBBY: SOUTH ELEVATION (52) — SCALE: 1/4" = 1'-0" — base/elev/b-inel11 dgn

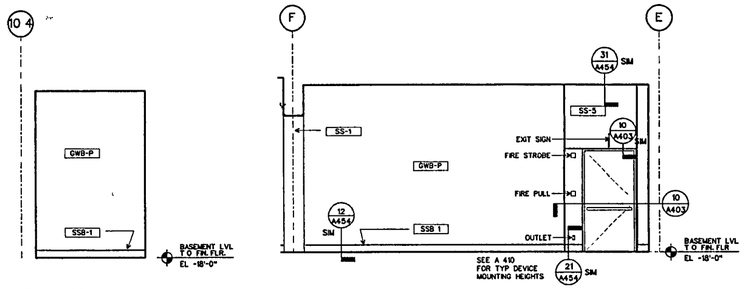

B-11 ELEV LOBBY: EAST ELEVATION (51) — base/elev/b-inel00 dgn

B-01 LOBBY- NORTH ELEVATION (50) — SCALE 1/4" = 1'-0" — base/elev/b-inel11 dgn

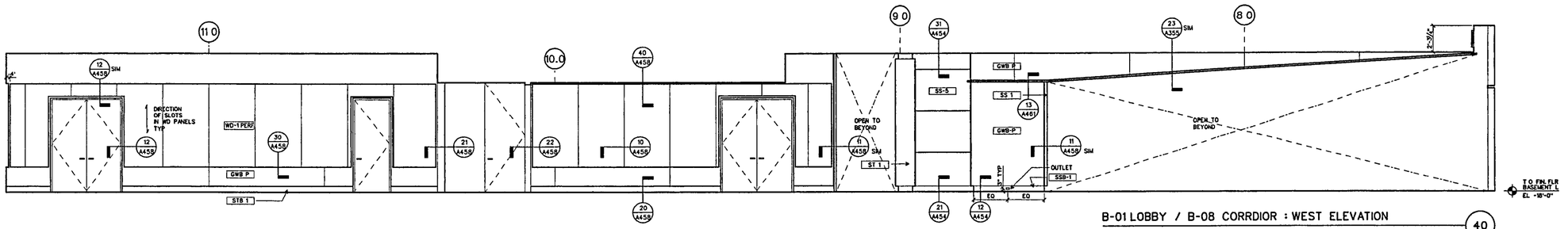

B-01 LOBBY / B-08 CORRDIOR : WEST ELEVATION (40) — SCALE 1/4" = 1'-0" — base/elev/b-inel10 dgn

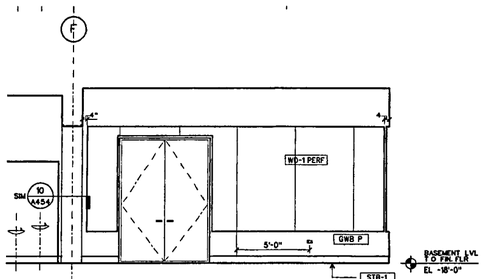

B-01 LOBBY: SOUTH ELEVATION (33) — SCALE 1/4" = 1'-0" — base/elev/b-inel11 dgn

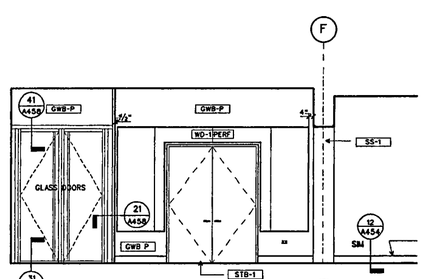

B-01 LOBBY: NORTH ELEVATION (32) — SCALE 1/4" = 1'-0" — base/elev/b-inel11 dgn

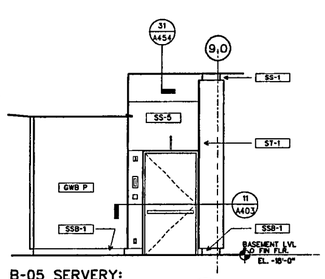

B-05 SERVERY: EAST ELEVATION (31) — SCALE: 1/4" = 1-0 — base/elev/b-inel10 dgn

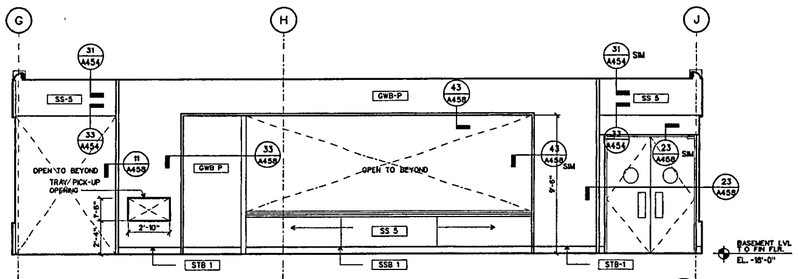

B-05 SERVERY: SOUTH ELEVATION (30) — SCALE: 1/4" = 1'-0" — base/elev/b-inel00 dgn

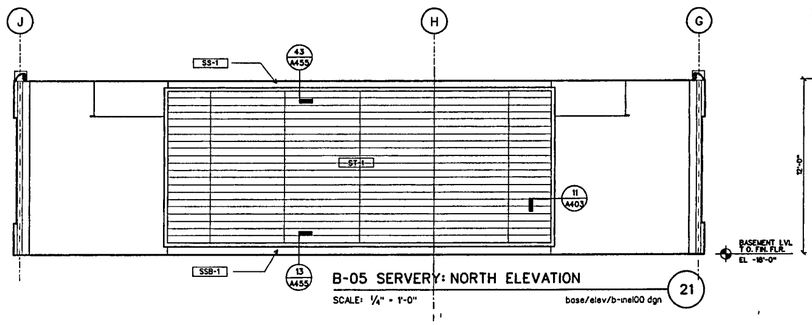

B-05 SERVERY: NORTH ELEVATION (21) — SCALE: 1/4" = 1'-0" — base/elev/b-inel00 dgn

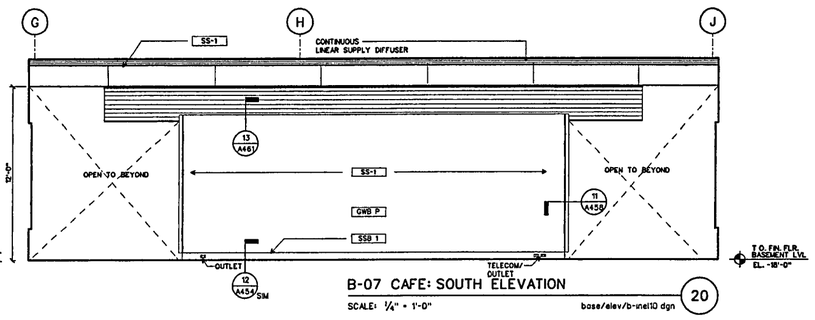

B-07 CAFE: SOUTH ELEVATION (20) — SCALE: 1/4" = 1'-0" — base/elev/b-inel10 dgn

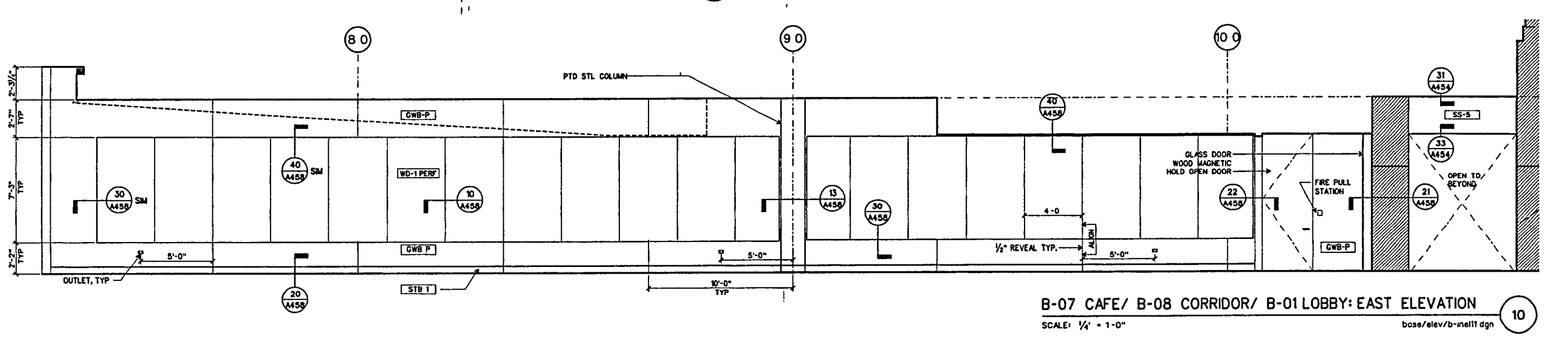

B-07 CAFE/ B-08 CORRIDOR/ B-01 LOBBY: EAST ELEVATION (10) — SCALE: 1/4" = 1-0" — base/elev/b-inel11 dgn

WILLIAM J. CLIN
PRESIDENTIA
CENTER

LITTLE ROCK, ARKANSAS

Architect
POLSHEK PARTNERSHIP LLP
320 West 13th Street
New York, New York 10014
212.807 7171

Coordinating Architects
POLK STANLEY YEARY ARCHITE
700 South Schiller Street
Little Rock, Arkansas 72201
501 376 0878

WITSELL EVANS RASCO
901 West Third Street
Little Rock, Arkansas 72201
501 374 5300

WOODS CARADINE ARCHITECT
2200 South Main Street
Little Rock, Arkansas 72206
501 374 4060

Landscape Architects
HARGREAVES ASSOCIATES
118 Magazine Street
Cambridge, Massachusetes 02138
617.661 0070

LANDSCAPE ARCHITECTURE, In
2300 Cottondale Lane Suite 202
Little Rock, Arkansas 72202
501 374 5810

Structural Engineer
LESLIE E. ROBERTSON ASSOC.
30 Broad Street, 47th Floor
New York, New York 10004
212 750 9000

MEP Engineers
FLACK + KURTZ Inc.
475 Fifth Avenue
New York, New York 10017
212 532.9600

CROMWELL ARCHITECTS ENGI
101 South Spring Street
Little Rock, Arkansas 72201
501 372.2900

Curtainwall Consultant
R. A. HEINTGES ARCHITECTS
126 Fifth Avenue, 9th Floor
New York, New York 10011
212 652-2966

Seal

Issue	
100% Construction Documents	0
90% Progress Printing	0
100% Struct./ CD Progress	0
100% Steel & Concrete CD & Architectural CD Progress	0
100% Design Development	0

Job No
Scale 1/4
Date September
Title
MUSEUM BUILD
INTERIOR ELEVATI
BASEM
Sheet No
A4

FOR OFFICIAL USE ON

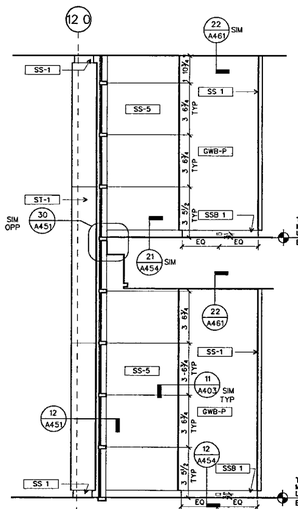

3-02 SKY LOBBY : EAST ELEVATION STAIR 5 (43)
SCALE 1/4" = 1'-0 base/elev/b-inel10 dgn

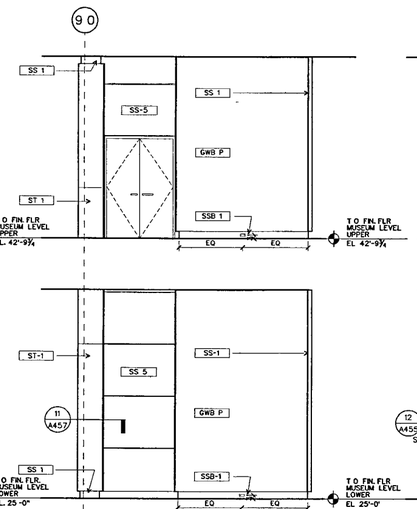

3-02 SKY LOBBY : EAST ELEVATION STAIR 4 (42)
SCALE 1/4" = 1-0 base/elev/b-inel10 dgn

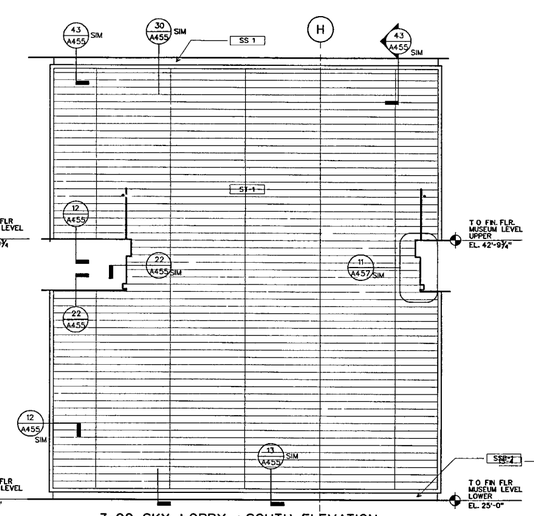

3-02 SKY LOBBY : SOUTH ELEVATION STAIR 4 (41)
SCALE 1/4 = 1-0 base/elev/b-inel10 dgn

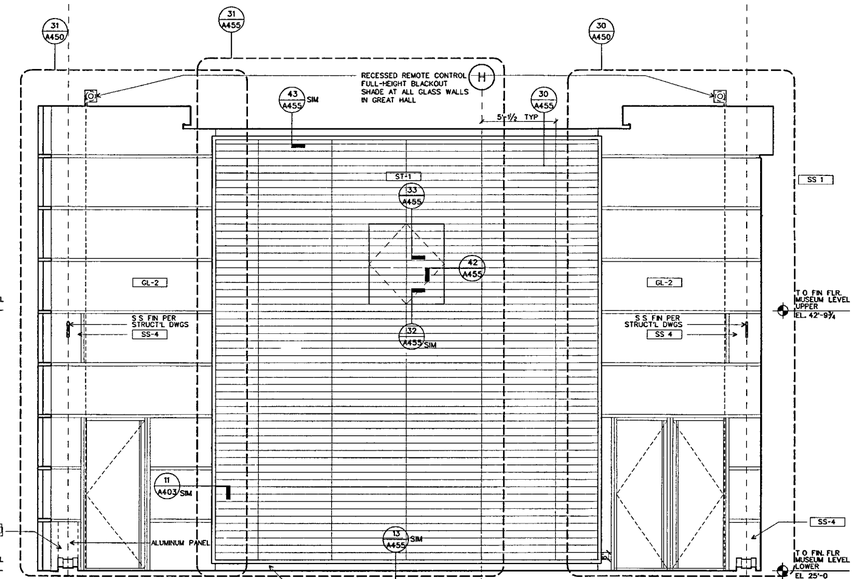

3-16 GREAT HALL : NORTH ELEVATION STAIR 5 (40)
SCALE 1/4" = 1-0' base/elev/b-inel13 dgn

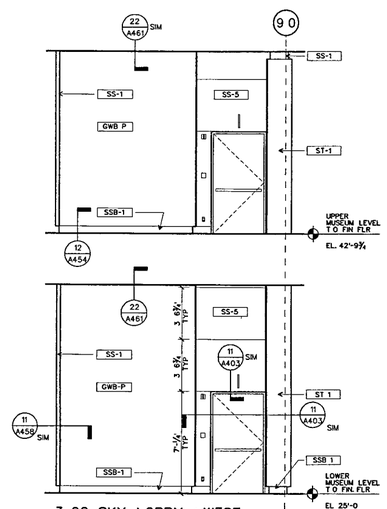

3-02 SKY LOBBY : WEST ELEVATION STAIR 4 (23)
SCALE 1/4" = 1'-0" base/elev/b-inel10 dgn

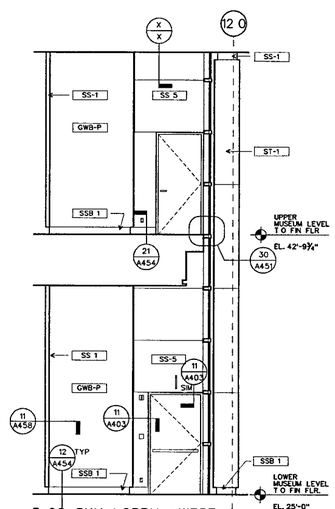

3-02 SKY LOBBY : WEST ELEVATION STAIR 4 (22)
SCALE 1/4 = 1-0 base/elev/b-inel10 dgn

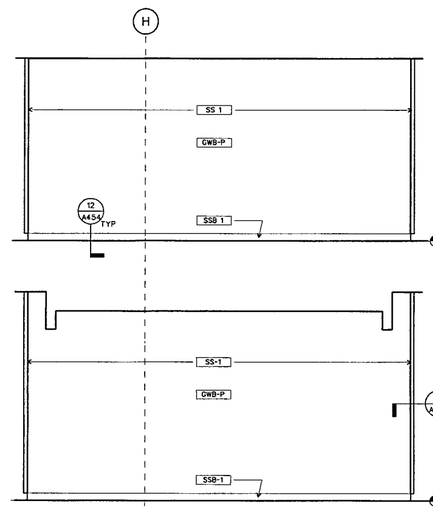

3-02 SKY LOBBY : NORTH ELEVATION STAIR 4 (21)
SCALE 1/4" = 1'-0" base/elev/b-inel10 dgn

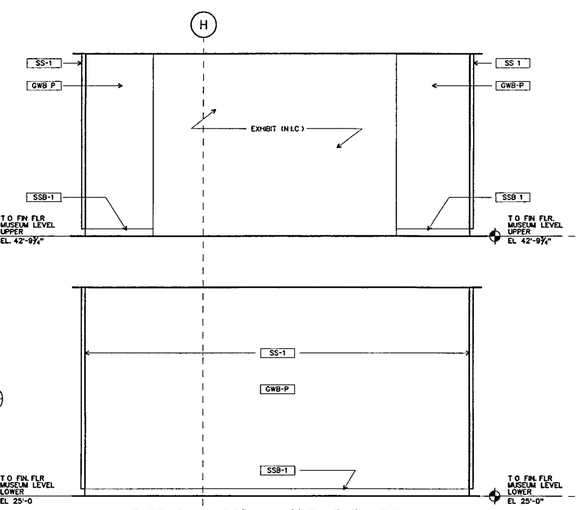

3-02 SKY LOBBY : NORTH ELEVATION STAIR 5 (20)
SCALE 1/4" = 1'-0" base/elev/b-inel13 dgn

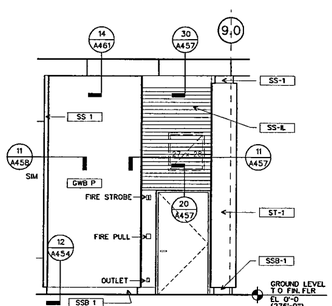

1-01 LOBBY : WEST ELEVATION STAIR 4 (14)
base/elev/b-inel10 dgn

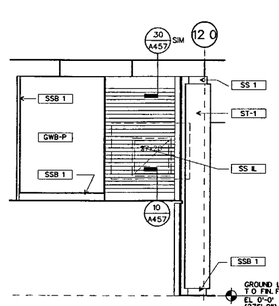

1-01 LOBBY : WEST ELEVATION STAIR 5 (13)
base/elev/b-inel10 dgn

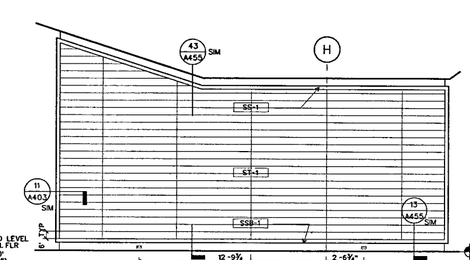

1-01 LOBBY : SOUTH ELEVATION STAIR 4 / STAIR 5 SIM (12)
SCALE 1/4 = 1-0 base/elev/b-inel10 dgn

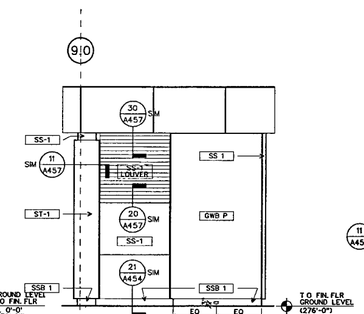

1-01 LOBBY : EAST ELEVATION STAIR 4 (11)
SCALE 1/4 = 1'-0" base/elev/b-inel10 dgn

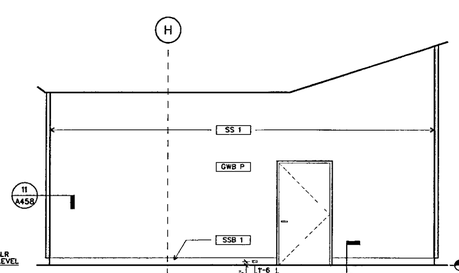

1-01 LOBBY : NORTH ELEVATION STAIR 5/ STAIR 4 SIM (10)
SCALE 1/4 = 1-0 base/elev/b-inel13 dgn

WILLIAM J CLINTON PRESIDENTIAL CENTER

LITTLE ROCK, ARKANSAS

Architect

POLSHEK PARTNERSHIP LLP
320 West 13th Street
New York, New York 10014
212.807 7171

Coordinating Architects

POLK STANLEY YEARY ARCHITECTS Ltd
700 South Schiller Street
Little Rock, Arkansas 72201
501 378 0878

WITSELL EVANS RASCO
901 West Third Street
Little Rock, Arkansas 72201
501 374 5300

WOODS CARADINE ARCHITECTS
2200 South Main Street
Little Rock, Arkansas 72206
501 374 4060

Landscape Architects

HARGREAVES ASSOCIATES
118 Magazine Street
Cambridge Massachusettes 02139
617 661 0070

LANDSCAPE ARCHITECTURE Inc.
2300 Cottondale Lane Suite 202
Little Rock, Arkansas 72202
501 374 5810

Structural Engineer

LESLIE E. ROBERTSON ASSOC RLLP
30 Broad Street, 47th Floor
New York, New York 10004
212.750 9000

MEP Engineers

FLACK + KURTZ Inc.
475 Fifth Avenue
New York, New York 10017
212.532 8600

CROMWELL ARCHITECTS ENGINEERS
101 South Spring Street
Little Rock, Arkansas 72201
501 372.2900

Curtainwall Consultant

R. A. HEINTGES ARCHITECTS
126 Fifth Avenue 9th Floor
New York, New York 10011
212 652-2066

Seal

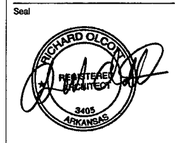

Issue	Date
100% Construction Documents	09/27/02
90% Progress Printing	08/30/02
100% Struct./CD Progress	07/01/02
100% Steel & Concrete CD & Architectural CD Progress	05/15/02
100% Design Development	03/01/02

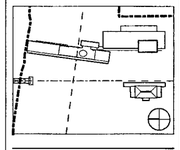

Job No 9908

Scale 1/4" = 1'-0"

Date September 27, 2002

Title

MUSEUM BUILDING INTERIOR ELEVATIONS GROUND FLOOR

Sheet No

A412

FOR OFFICIAL USE ONLY

115

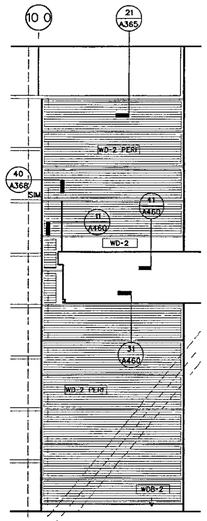

3-02 SKY LOBBY: PARTIAL EAST ELEVATION (43)
base/elev/b-inel09 dgn

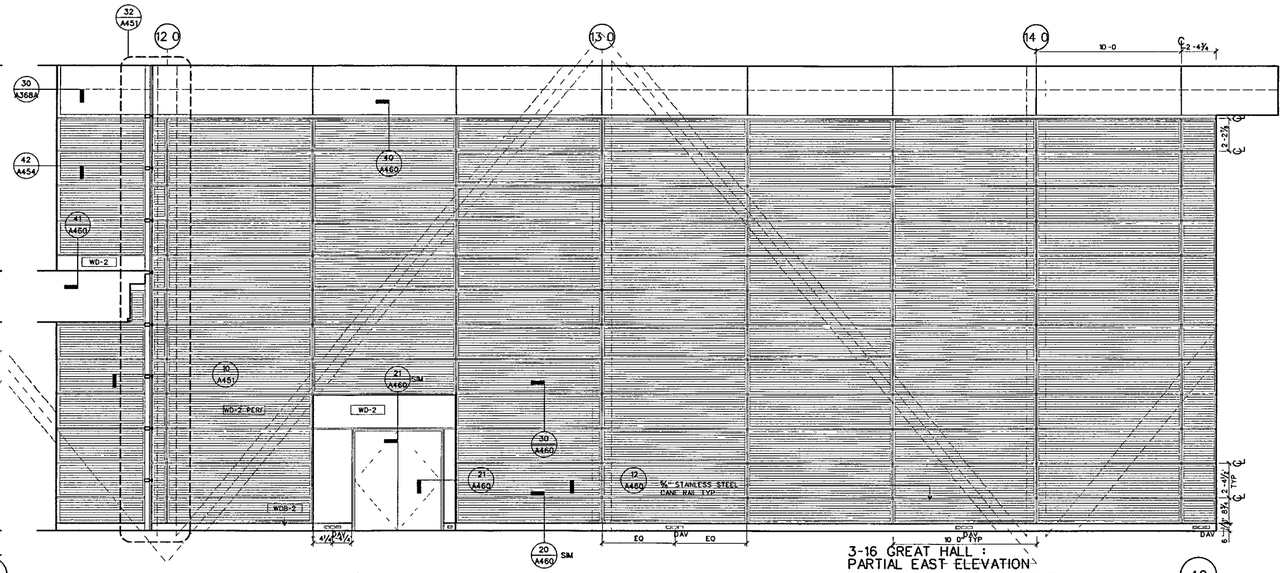

3-16 GREAT HALL : PARTIAL EAST ELEVATION (42)
SCALE ¼ = 1-0 base/elev/b-inel09 dgn

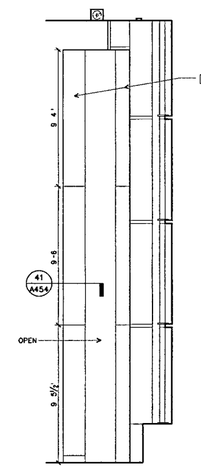

3-16 GREAT HALL : PARTIAL EAST ELEVATION (41)
SCALE ¼" = 1'-0" base/elev/b-inel06 dgn

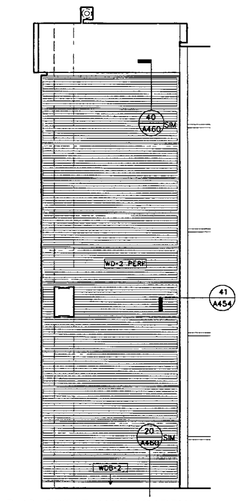

3-16 GREAT HALL: PARTIAL SOUTH ELEVATION (40)
SCALE ¼ = 1'-0" base/elev/b-inel09 dgn

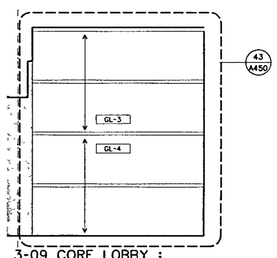

3-09 CORE LOBBY : SOUTH ELEVATION (14)
SCALE ¼ = 1'-0" base/elev/b-inel11 dgn

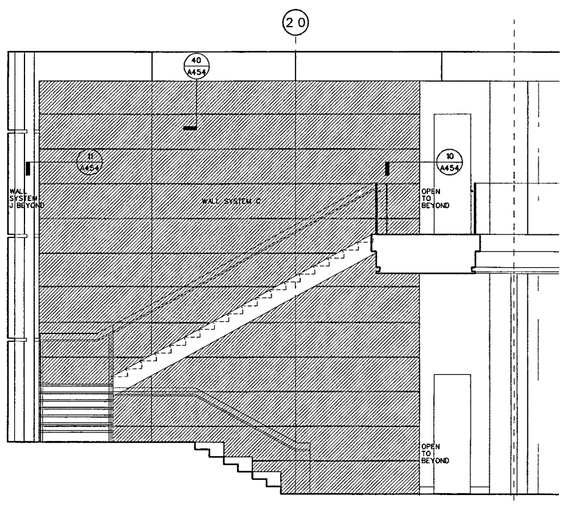

3-06 STAIR LANDING: EAST ELEVATION (13)
SCALE ¼ = 1-0 base/elev/b-inel03 dgn

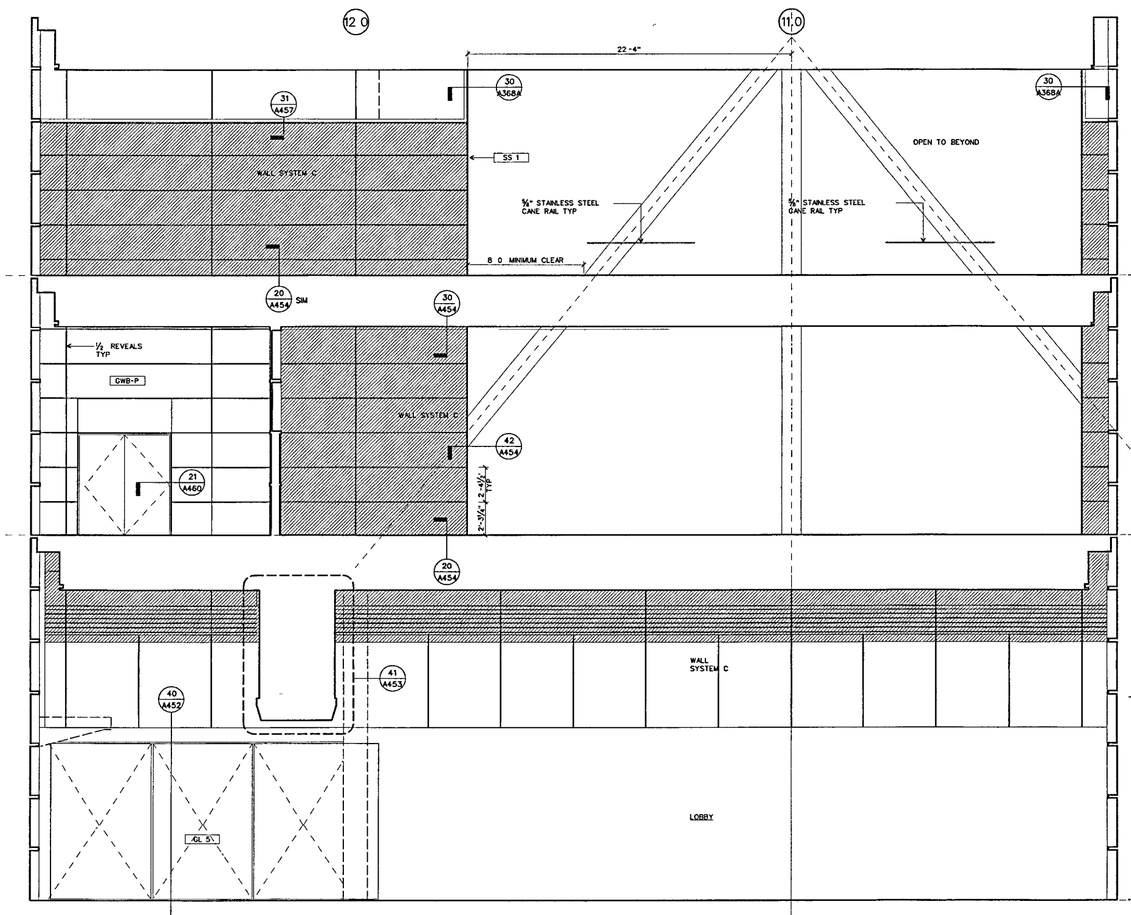

1-07,3-09,4-07 CORE LOBBIES: WEST ELEVATION (10)
SCALE ¼ = 1-0 base/elev/b-inel02 dgn

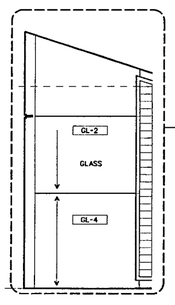

1-06 GIFT SHOP: NORTH ELEVATION (12)
base/elev/b-inel02 dgn

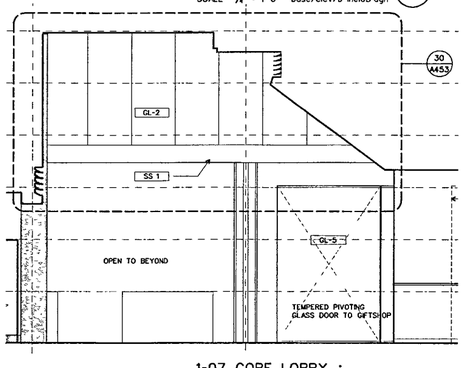

1-07 CORE LOBBY : SOUTH ELEVATION (11)
SCALE ¼ = 1-0 base/elev/b-inel11 dgn

WILLIAM J CLINTON PRESIDENTIAL CENTER

LITTLE ROCK, ARKANSAS

Architect

POLSHEK PARTNERSHIP LLP
320 West 13th Street
New York New York 10014
212 807 7171

Coordinating Architects

POLK STANLEY YEARY ARCHITECTS Ltd
700 South Schiller Street
Little Rock, Arkansas 72201
501 378 0878

WITSELL EVANS RASCO
901 West Third Street
Little Rock, Arkansas 72201
501 374 5300

WOODS CARADINE ARCHITECTS
2200 South Main Street
Little Rock, Arkansas 72206
501 374 4060

Landscape Architects

HARGREAVES ASSOCIATES
118 Magazine Street
Cambridge Massachusettes 02139
617 661 0070

LANDSCAPE ARCHITECTURE, Inc.
2300 Cottondale Lane Suite 202
Little Rock, Arkansas 72202
501 374 5810

Structural Engineer

LESLIE E. ROBERTSON ASSOC , RLLP
30 Broad Street, 47th Floor
New York New York 10004
212.750 9000

MEP Engineers

FLACK + KURTZ Inc.
475 Fifth Avenue
New York, New York 10017
212 532.9600

CROMWELL ARCHITECTS ENGINEERS
101 South Spring Street
Little Rock, Arkansas 72201
501 372 2900

Curtainwall Consultant

R A. HEINTGES ARCHITECTS
126 Fifth Avenue 9th Floor
New York, New York 10011
212 652-2966

Seal

RICHARD OLCOTT REGISTERED ARCHITECT 3405 ARKANSAS

Issue	Date
100% Construction Documents	09/27/02
90% Progress Printing	08/30/02
100% Struct./ CD Progress	07/01/02
100% Steel & Concrete CD & Architectural CD Progress	05/15/02
100% Design Development	03/01/02

Job No 9908

Scale 1/4" = 1'-0"

Date September 27 2002

Title

MUSEUM BUILDING INTERIOR ELEVATIONS

Sheet No

A413

FOR OFFICIAL USE ONLY

EXECUTIVE LEVEL INTERIOR FINISHES N I C , TYP

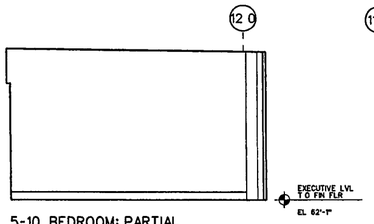

5-10 BEDROOM: PARTIAL EAST ELEVATION (63)
base/elev/b-inel28 dgn

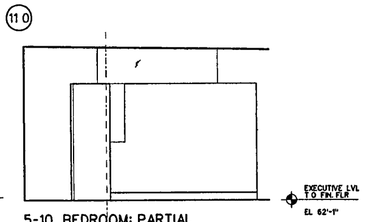

5-10 BEDROOM: PARTIAL EAST ELEVATION (62)
base/elev/b-inel26 dgn

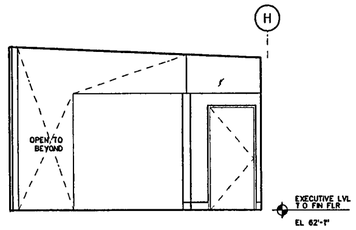

5-10 BEDROOM: NORTH ELEVATION (61)
base/elev/b-inel26 dgn

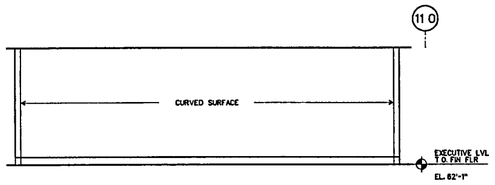

5-12 LIBRARY: PARTIAL EAST ELEVATION (60)
base/elev/b-inel23 dgn

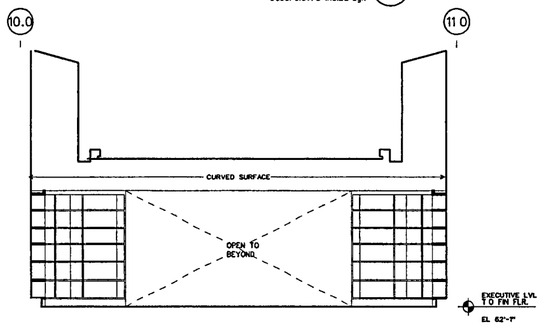

5-12 LIBRARY: PARTIAL EAST ELEVATION (52)
base/elev/b-inel22 dgn

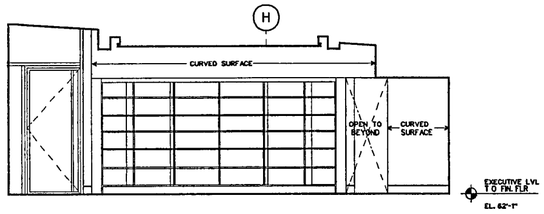

5-12 LIBRARY: NORTH ELEVATION (51)
base/elev/b-inel22 dgn

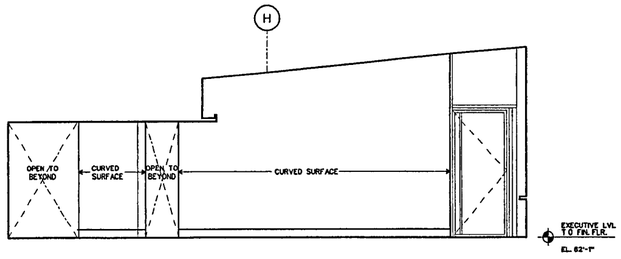

5-13 DINING ROOM: SOUTH ELEVATION (50)
base/elev/b-inel22 dgn

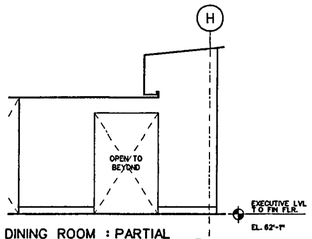

5-13 DINING ROOM : PARTIAL SOUTH ELEVATION (43)
base/elev/b-inel20 dgn

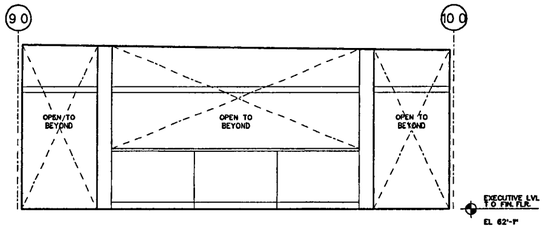

5-13 DINING ROOM : EAST ELEVATION (42)
base/elev/b-inel20 dgn

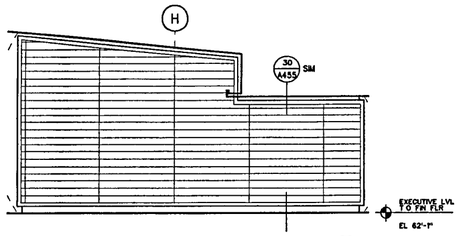

5-13 DINING ROOM : NORTH ELEVATION (41)
base/elev/b-inel20 dgn

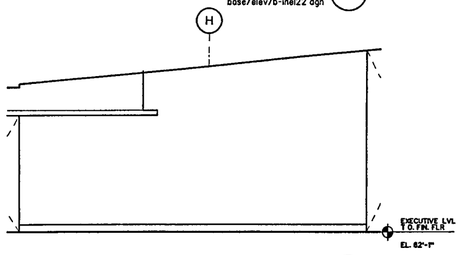

5-14 LIVING ROOM : SOUTH ELEVATION (40)
base/elev/b-inel19 dgn

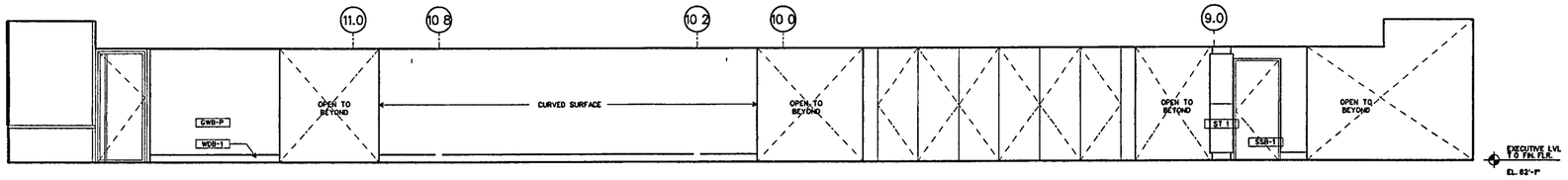

5-10 GALLERY : WEST ELEVATION (30)
base/elev/b-inel19 dgn

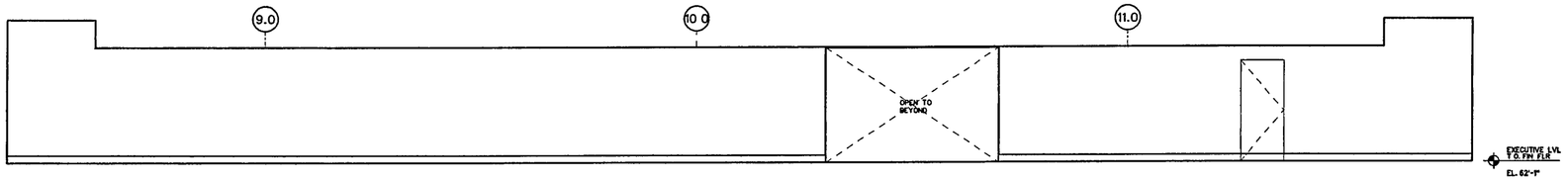

5-10 GALLERY : EAST ELEVATION (20)
base/elev/b-inel19 dgn

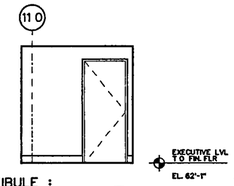

VESTIBULE : WEST ELEVATION (15)
base/elev/b-inel25 dgn

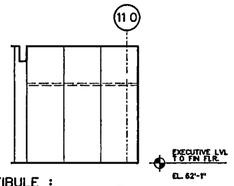

VESTIBULE : EAST ELEVATION (14)
base/elev/b-inel25 dgn

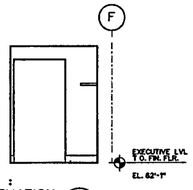

VESTIBULE : NORTH ELEVATION (13)
base/elev/b-inel25 dgn

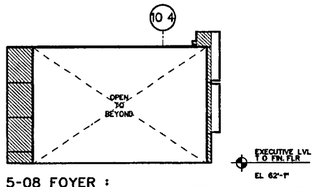

5-08 FOYER : WEST ELEVATION (12)
base/elev/b-inel18 dgn

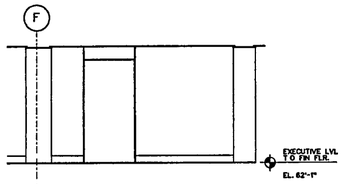

5-08 FOYER : SOUTH ELEVATION (11)
base/elev/b-inel18 dgn

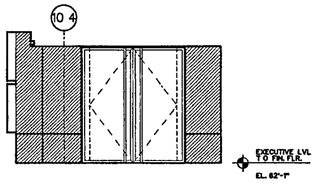

5-08 FOYER : EAST ELEVATION (10)
base/elev/b-inel18 dgn

FOR OFFICIAL USE ONLY

WILLIAM J CLINTON PRESIDENTIAL CENTER

LITTLE ROCK, ARKANSAS

Architect

POLSHEK PARTNERSHIP LLP
320 West 13th Street
New York, New York 10014
212 807 7171

Coordinating Architects

POLK STANLEY YEARY ARCHITECTS Ltd
700 South Schiller Street
Little Rock, Arkansas 72201
501 378 0878

WITSELL EVANS RASCO
901 West Third Street
Little Rock, Arkansas 72201
501 374 5300

WOODS CARADINE ARCHITECTS
2200 South Main Street
Little Rock, Arkansas 72206
501 374 4060

Landscape Architects

HARGREAVES ASSOCIATES
118 Magazine Street
Cambridge, Massachusettes 02139
617 661 0070

LANDSCAPE ARCHITECTURE, Inc.
2300 Cottondale Lane Suite 202
Little Rock, Arkansas 72202
501 374 5510

Structural Engineer

LESLIE E. ROBERTSON ASSOC , RLLP
30 Broad Street, 47th Floor
New York, New York 10004
212.750 9000

MEP Engineers

FLACK + KURTZ Inc.
475 Fifth Avenue
New York, New York 10017
212 532 9600

CROMWELL ARCHITECTS ENGINEERS
101 South Spring Street
Little Rock, Arkansas 72201
501 372.2900

Curtainwall Consultant

R. A. HEINTGES ARCHITECTS
128 Fifth Avenue, 9th Floor
New York, New York 10011
212 632-2956

Seal

RICHARD OLCOTT HEINTGES ARCHITECT 3405 ARKANSAS

Issue	Date
100% Construction Documents	09/27/02
90% Progress Printing	08/30/02
100% Struct./ CD Progress	07/01/02
100% Steel & Concrete CD & Architectural CD Progress	06/15/02
100% Design Development	03/01/02

Job No 9908

Scale 1/4" = 1'-0"

Date September 27, 2002

Title

MUSEUM BUILDING INTERIOR ELEVATIONS

Sheet No

A415

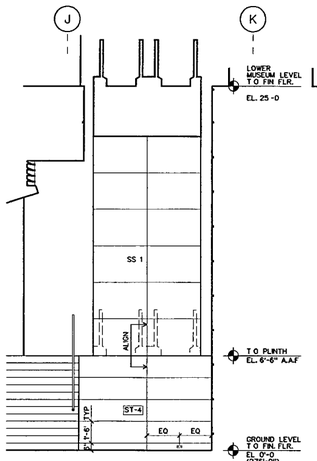

1-01 MAIN LOBBY: PARTIAL SOUTH ELEVATION 52

base/elev/b-inel16 dgn

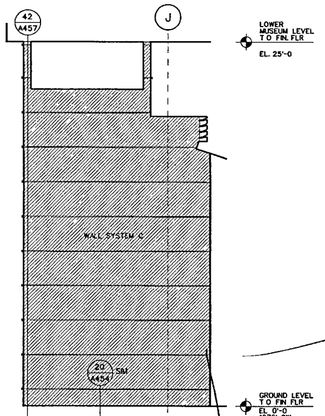

1-01 MAIN LOBBY: PARTIAL NORTH ELEVATION 51

base/elev/b-inel16 dgn

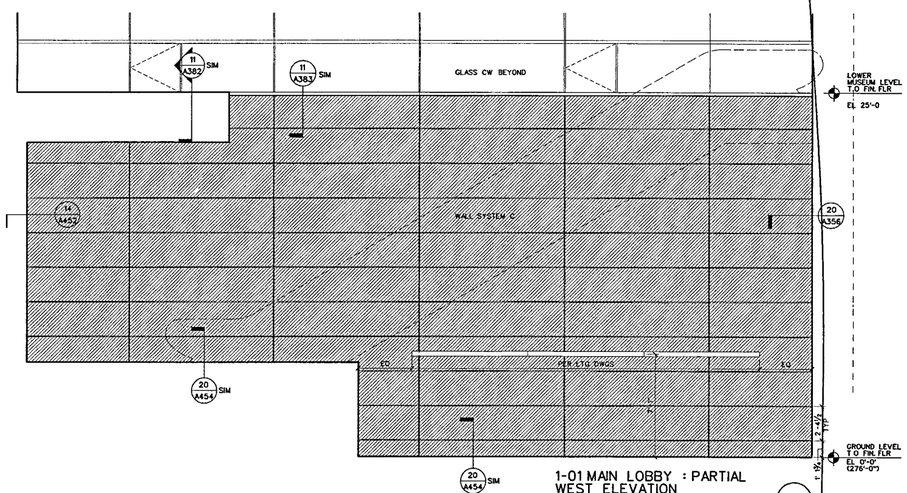

1-01 MAIN LOBBY : PARTIAL WEST ELEVATION 31

SCALE 1/4 = 1-0 base/elev/b-inel16 dgn

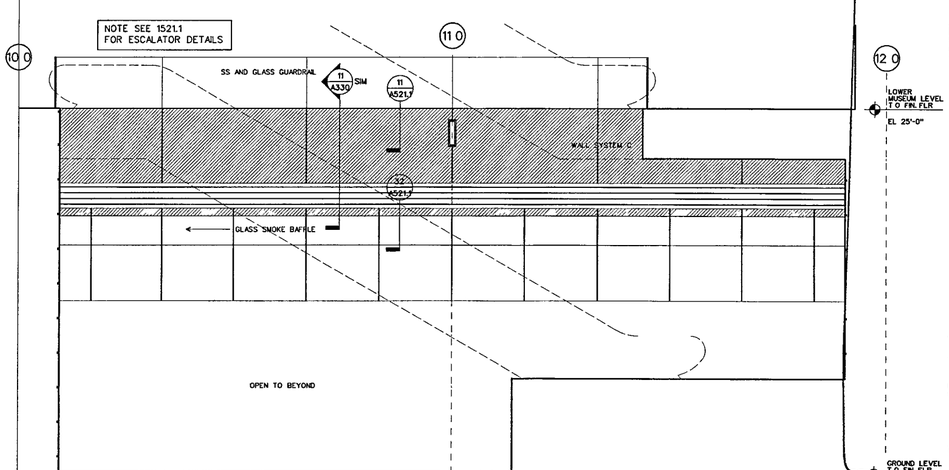

1-01 MAIN LOBBY PARTIAL EAST ELEVATION 11

SCALE 1/4 = 1-0 base/elev/b-inel16 dgn

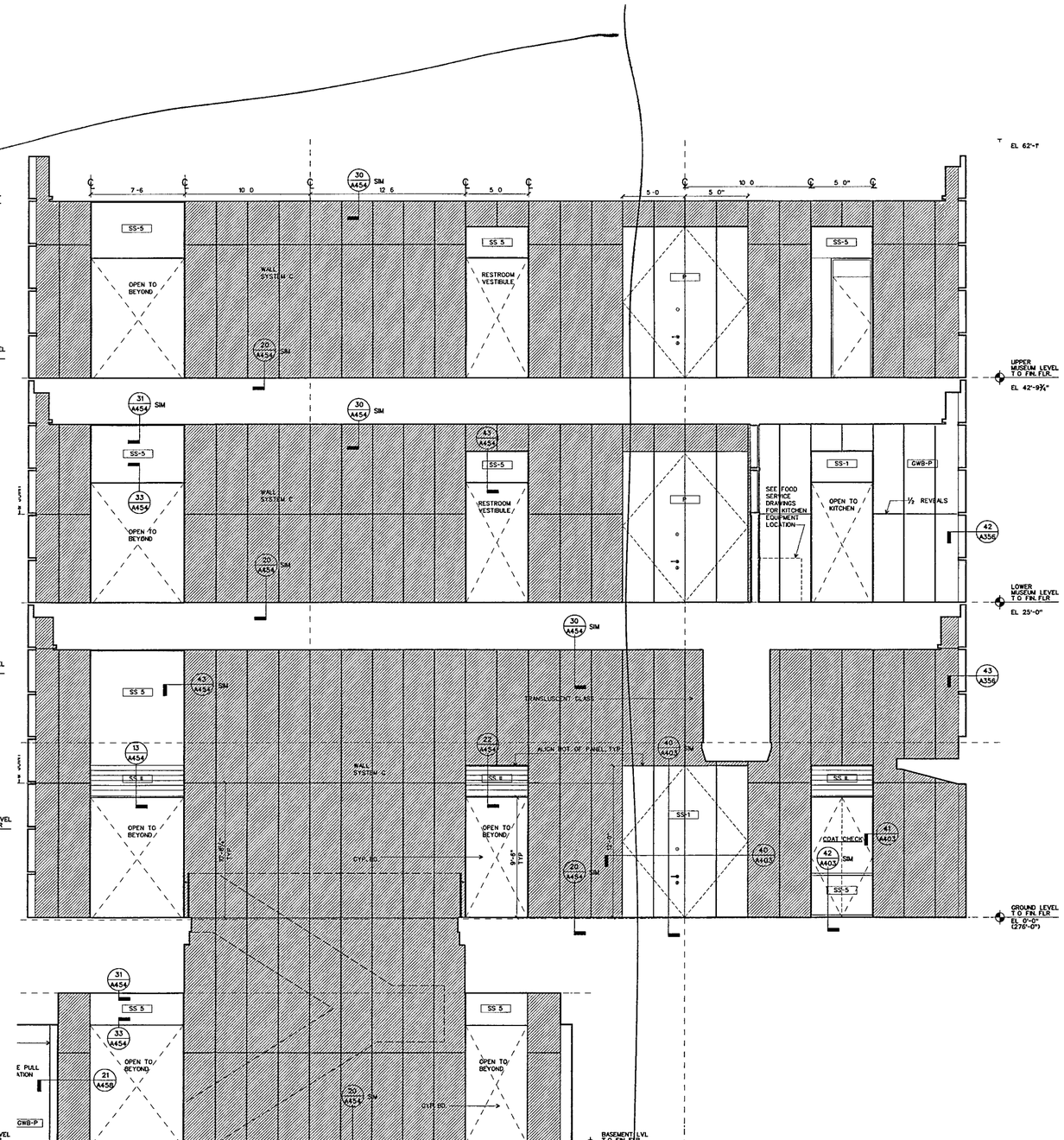

B-01, 1-07,3-09 & 4-07 CORE LOBBIES: EAST ELEVATION 10

SCALE 1/4 = 1-0 base/elev/b-inel11 dgn

WILLIAM J CLINTON PRESIDENTIAL CENTER

LITTLE ROCK, ARKANSAS

Architect

POLSHEK PARTNERSHIP LLP
320 West 13th Street
New York, New York 10014
212 807 7171

Coordinating Architects

POLK STANLEY YEARY ARCHITECTS Ltd
700 South Schiller Street
Little Rock, Arkansas 72201
501 378 0878

WITSELL EVANS RASCO
901 West Third Street
Little Rock, Arkansas 72201
501 374 5300

WOODS CARADINE ARCHITECTS
2200 South Main Street
Little Rock, Arkansas 72206
501.374 4060

Landscape Architects

HARGREAVES ASSOCIATES
118 Magazine Street
Cambridge Massachusettes 02139
617 661 0070

LANDSCAPE ARCHITECTURE Inc.
2300 Cottondale Lane Suite 202
Little Rock, Arkansas 72202
501 374 5810

Structural Engineer

LESLIE E ROBERTSON ASSOC , RLLP
30 Broad Street, 47th Floor
New York, New York 10004
212 750 9000

MEP Engineers

FLACK + KURTZ Inc.
475 Fifth Avenue
New York, New York 10017
212 532 9600

CROMWELL ARCHITECTS ENGINEERS
101 South Spring Street
Little Rock, Arkansas 72201
501 372 2900

Curtainwall Consultant

R. A. HEINTGES ARCHITECTS
126 Fifth Avenue, 9th Floor
New York, New York 10011
212 652-2966

Seal

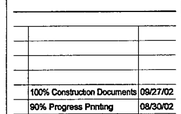

Issue	Date
100% Construction Documents	09/27/02
90% Progress Printing	08/30/02
100% Struct./ CD Progress	07/01/02
100% Steel & Concrete CD & Architectural CD Progress	05/15/02
100% Design Development	03/01/02

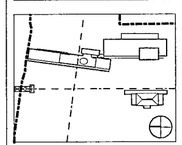

Job No 9908

Scale 1/4" = 1'-0"

Date September 27, 2002

Title

MUSEUM BUILDING INTERIOR ELEVATIONS

Sheet No

A414

FOR OFFICIAL USE ONLY

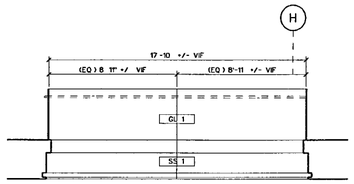

CATWALK ELEVATION - NORTH 1 (64)
SCALE 1/4" = 1'-0" b-inel-rail01.dgn

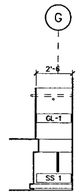

CATWALK ELEV. NORTH 2 (63)
SCALE 1/4" = 1'-0" b-inel-rail02

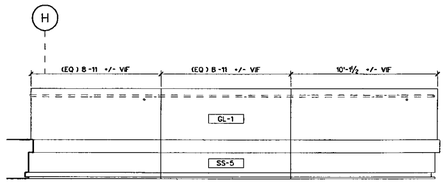

CATWALK ELEVATION - SOUTH 1 (62)
SCALE 1/4" = 1'-0" b-inel-rail02.dgn

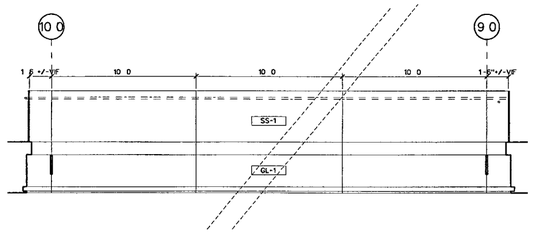

CATWALK ELEVATION - WEST 3 (61)
SCALE 1/4" = 1'-0" b-inel-rail03.dgn

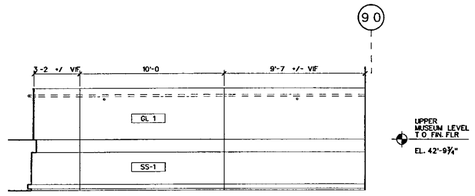

CATWALK ELEVATION - WEST 2 (60)
SCALE 1/4" = 1'-0" b-inel-rail02.dgn

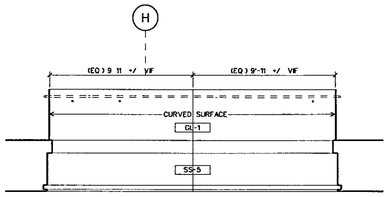

CATWALK ELEVATION - SOUTH 2 (52)
SCALE 1/4" = 1'-0" b-inel-rail01.dgn

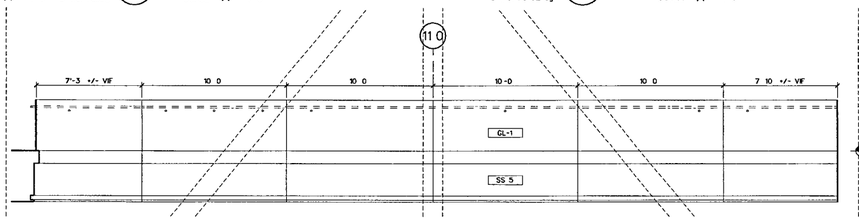

CATWALK ELEVATION - EAST 3 (51)
SCALE 1/4" = 1'-0" b-inel-rail03.dgn

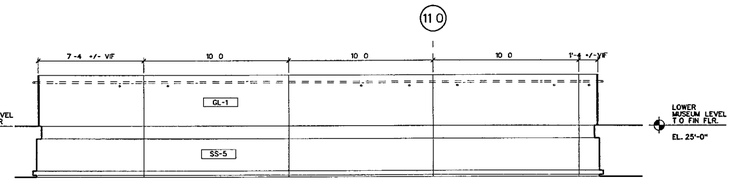

CATWALK ELEVATION - EAST 4 (50)
SCALE 1/4" = 1'-0" b-inel-rail03.dgn

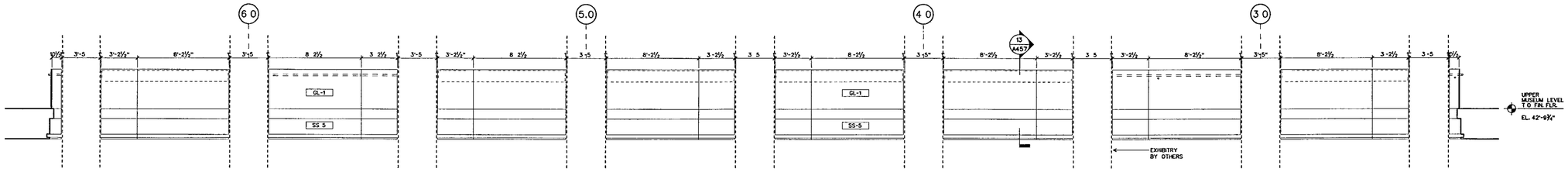

CATWALK ELEVATION - WEST 1 (40)
SCALE 1/4" = 1'-0" b-inel-rail01.dgn

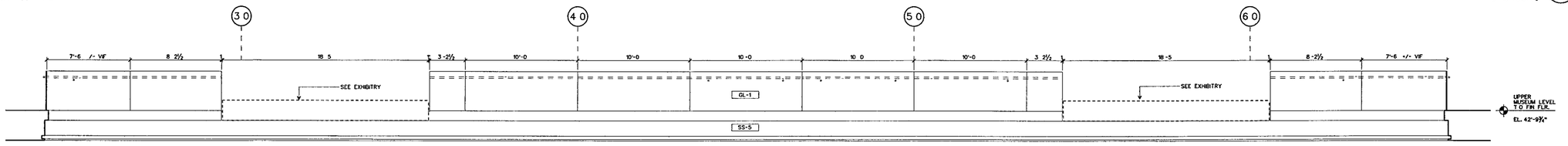

CATWALK ELEVATION - EAST 1 (30)
SCALE 1/4" = 1'-0" b-inel-rail01.dgn

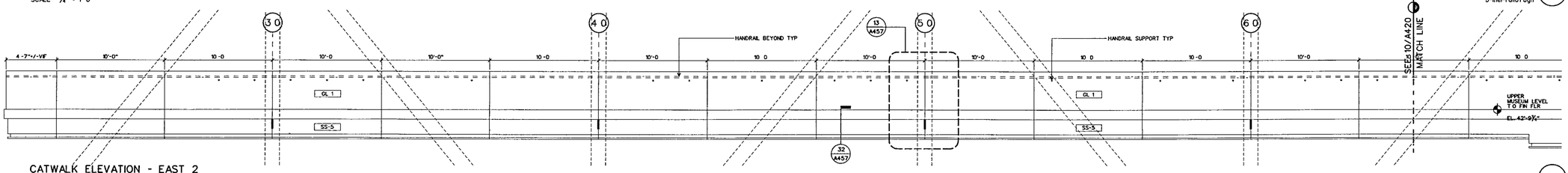

CATWALK ELEVATION - EAST 2 (20)
SCALE 1/4" = 1'-0" b-inel-rail02.dgn

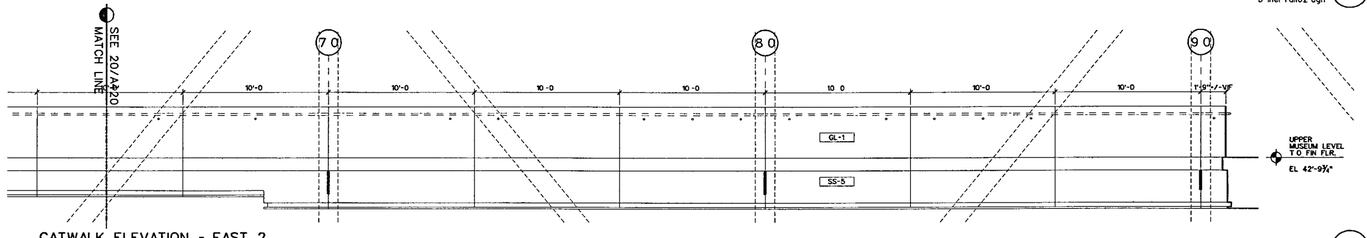

CATWALK ELEVATION - EAST 2 (10)
SCALE 1/4" = 1'-0" b-inel-rail02.dgn

WILLIAM J CLINTON PRESIDENTIAL CENTER

LITTLE ROCK, ARKANSAS

Architect

POLSHEK PARTNERSHIP LLP
320 West 13th Street
New York, New York 10014
212 807 7171

Coordinating Architects

POLK STANLEY YEARY ARCHITECTS Ltd
700 South Schiller Street
Little Rock, Arkansas 72201
501 378 0878

WITSELL EVANS RASCO
901 West Third Street
Little Rock, Arkansas 72201
501 374 5300

WOODS CARADINE ARCHITECTS
2200 South Main Street
Little Rock, Arkansas 72206
501 374 4060

Landscape Architects

HARGREAVES ASSOCIATES
118 Magazine Street
Cambridge Massachusettes 02139
617 661 0070

LANDSCAPE ARCHITECTURE Inc.
2300 Cottondale Lane Suite 202
Little Rock, Arkansas 72202
501 374 5810

Structural Engineer

LESLIE E. ROBERTSON ASSOC., RLLP
30 Broad Street, 47th Floor
New York, New York 10004
212.750 9000

MEP Engineers

FLACK + KURTZ Inc.
475 Fifth Avenue
New York, New York 10017
212 532 9600

CROMWELL ARCHITECTS ENGINEERS
101 South Spring Street
Little Rock, Arkansas 72201
501 372 2900

Curtainwall Consultant

R. A. HEINTGES ARCHITECTS
126 Fifth Avenue 9th Floor
New York, New York 10011
212 652-2966

Seal

Issue	Date
100% Construction Documents	09/27/02
90% Progress Printing	08/30/02
100% Struct./ CD Progress	07/01/02
100% Steel & Concrete CD & Architectural CD Progress	05/15/02
100% Design Development	03/01/02

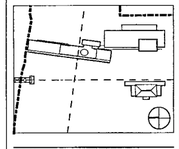

Job No: 9908

Scale: 1/4" = 1'-0"

Date: September 27, 2002

Title: MUSEUM BUILDING INTERIOR ELEVATIONS GLASS RAILINGS

Sheet No: A420

FOR OFFICIAL USE ONLY

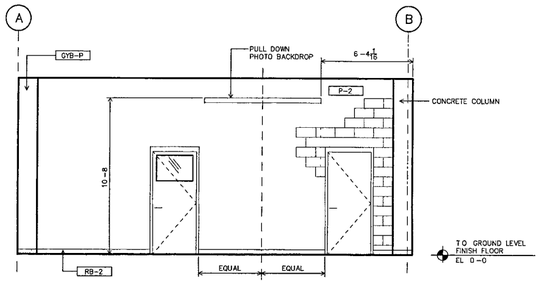

1-31 MUSEUM PROCESSING LOOKING SOUTH (43)

SCALE 1/4" = 1'-0"

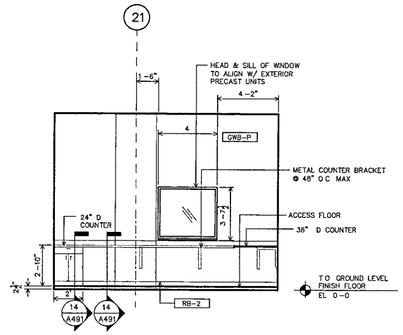

1-25 SECURITY CONTROL OFFICE LOOKING EAST (42)

SCALE 1/4" = 1'-0"

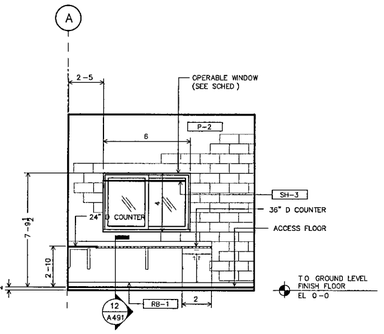

1-25 SECURITY CONTROL OFFICE LOOKING SOUTH (41)

SCALE 1/4" = 1'-0"

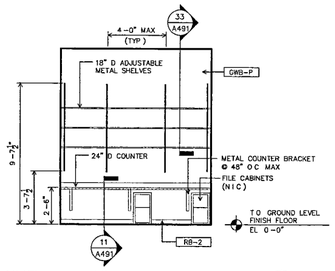

1-20 FACILITY MANAGER LOOKING WEST (40)

SCALE 1/4" = 1'-0"

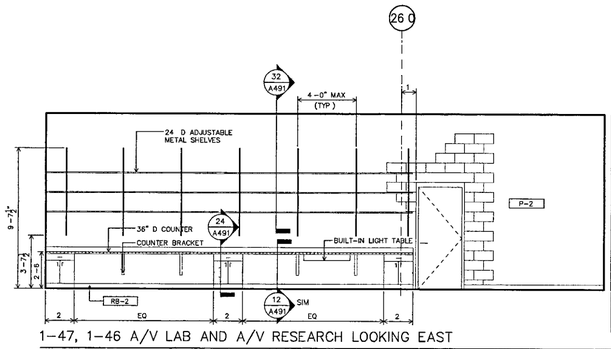

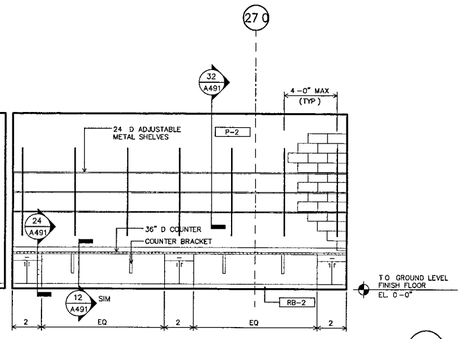

1-47, 1-46 A/V LAB AND A/V RESEARCH LOOKING EAST (32)

SCALE 1/4" = 1'-0"

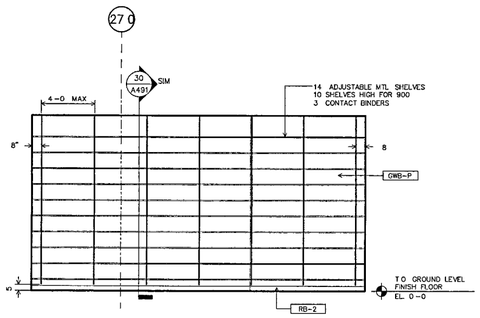

1-46 A/V RESEARCH LOOKING WEST (31)

SCALE 1/4" = 1-0"

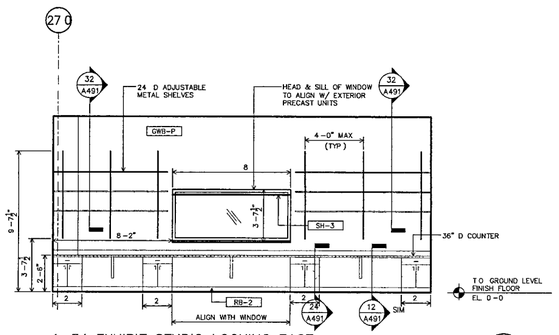

1-34 EXHIBIT STUDIO LOOKING EAST (30)

SCALE 1/4" = 1'-0"

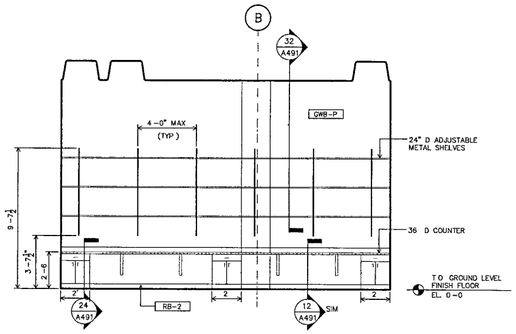

1-37 NARA RECEIVING LOOKING SOUTH (22)

SCALE 1/4" = 1'-0"

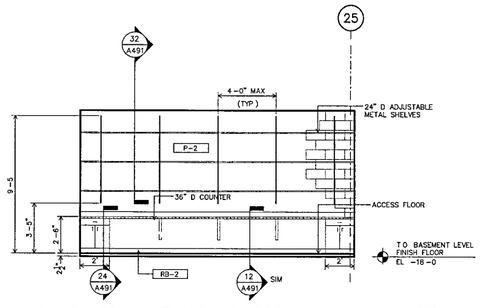

B-46 NARA COMPUTER LOOKING WEST (21)

SCALE 1/4" = 1'-0"

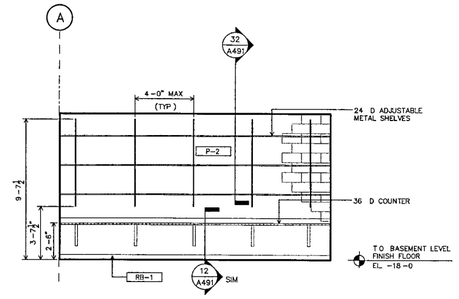

B-33 CLASSIFIED DOCUMENT WORKROOM LOOKING SOUTH (20)

SCALE 1/4" = 1'-0"

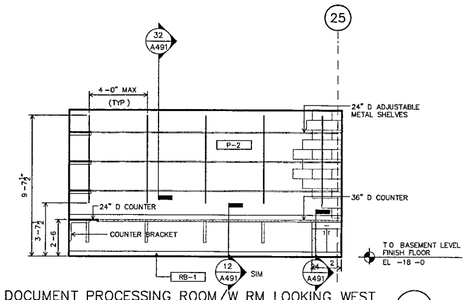

B-45 DOCUMENT PROCESSING ROOM/W RM LOOKING WEST (12)

SCALE 1/4" = 1'-0"

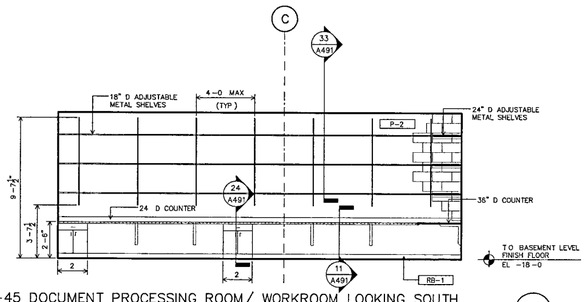

B-45 DOCUMENT PROCESSING ROOM/ WORKROOM LOOKING SOUTH (11)

SCALE 1/4" = 1'-0"

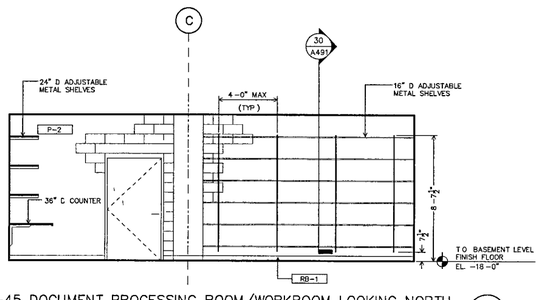

B-45 DOCUMENT PROCESSING ROOM/WORKROOM LOOKING NORTH (10)

SCALE 1/4" = 1'-0"

WILLIAM J CLINTON PRESIDENTIAL CENTER

LITTLE ROCK, ARKANSAS

Architect

POLSHEK PARTNERSHIP LLP
320 West 13th Street
New York New York 10014
212 807 7171

Coordinating Architects

POLK STANLEY YEARY ARCHITECTS Ltd
700 South Schiller Street
Little Rock, Arkansas 72201
501 378 0878

WITSELL EVANS RASCO
901 West Third Street
Little Rock, Arkansas 72201
501 374 5300

WOODS CARADINE ARCHITECTS
2200 South Main Street
Little Rock, Arkansas 72206
501 374 4060

Landscape Architects

HARGREAVES ASSOCIATES
118 Magazine Street
Cambridge, Massachusettes 02139
617 661 0070

LANDSCAPE ARCHITECTURE, Inc
2300 Cottondale Lane Suite 202
Little Rock, Arkansas 72202
501 374.5810

Structural Engineer

LESLIE E ROBERTSON ASSOC , RLLP
30 Broad Street, 47th Floor
New York, New York 10004
212 750 9000

MEP Engineers

FLACK + KURTZ Inc.
475 Fifth Avenue
New York, New York 10017
212 532 9600

CROMWELL ARCHITECTS ENGINEERS
101 South Spring Street
Little Rock, Arkansas 72201
501 372 2900

Curtainwall Consultant

R. A. HEINTGES ARCHITECTS
126 Fifth Avenue, 9th Floor
New York, New York 10011
212 652 2966

Seal

WITSELL EVANS & RASCO P.A. REGISTERED ARCHITECTS NO C-44 ARKANSAS

Issue	Date
100% Construction Documents	09/27/02
90% Progress Printing	08/30/02
100% Struct./CD Progress	07/01/02

Job No 9908

Scale 1/4" = 1'-0"

Date September 27, 2002

Title

INTERIOR ELEVATIONS ARCHIVE

Sheet No

A430

FOR OFFICIAL USE ONLY

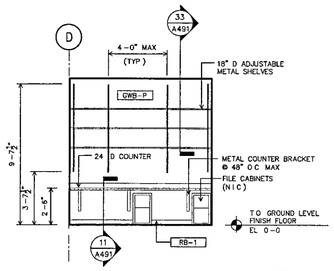

1-14 EDUCATION SPECIALIST LOOKING NORTH (33)

SCALE 1/4" = 1'-0"

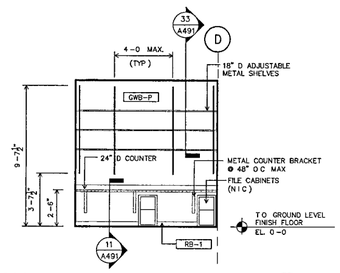

1-15 VOLUNTEER COORDINATOR LOOKING SOUTH (32)

SCALE 1/4" = 1'-0"

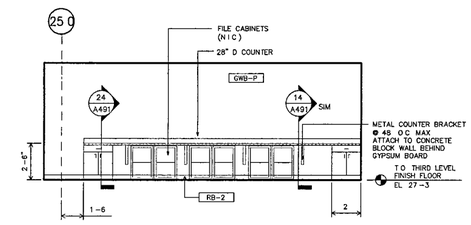

3-23 FILE/COPY/FAX & SUPPLY ROOM LOOKING EAST (31)

SCALE 1/4" = 1'-0"

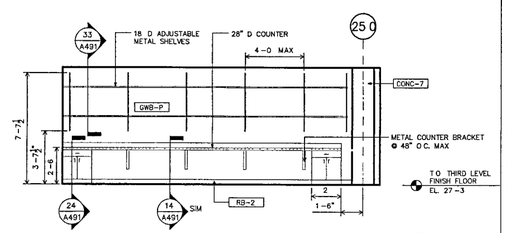

3-23 FILE/COPY/FAX & SUPPLY ROOM LOOKING WEST (30)

SCALE 1/4" = 1'-0"

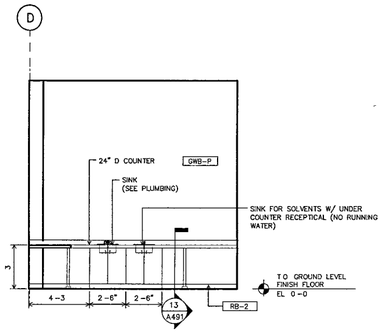

1-41 PAINT STUDIO LOOKING NORTH (23)

SCALE 1/4" = 1'-0"

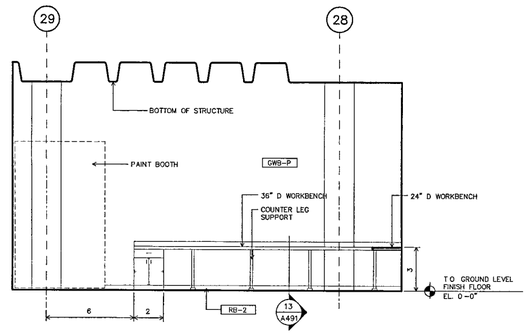

1-41 PAINT STUDIO LOOKING WEST (22)

SCALE 1/4" = 1'-0"

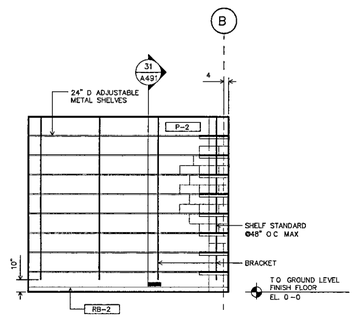

1-27 STORAGE LOOKING SOUTH (21)

SCALE 1/4" = 1'-0"

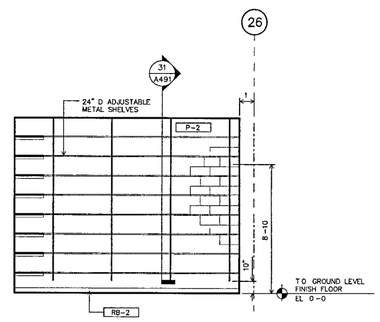

1-27 STORAGE LOOKING WEST (20)

SCALE 1/4" = 1'-0"

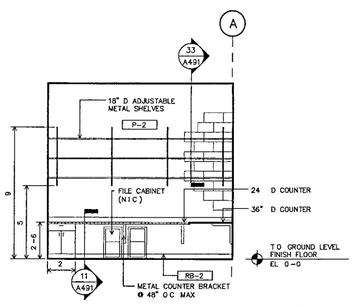

1-33 EXHIBIT SPECIALIST LOOKING NORTH (13)

SCALE 1/4" = 1'-0"

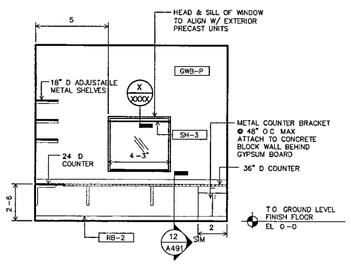

1-33 EXHIBIT SPECIALIST LOOKING EAST (12)

SCALE 1/4" = 1'-0"

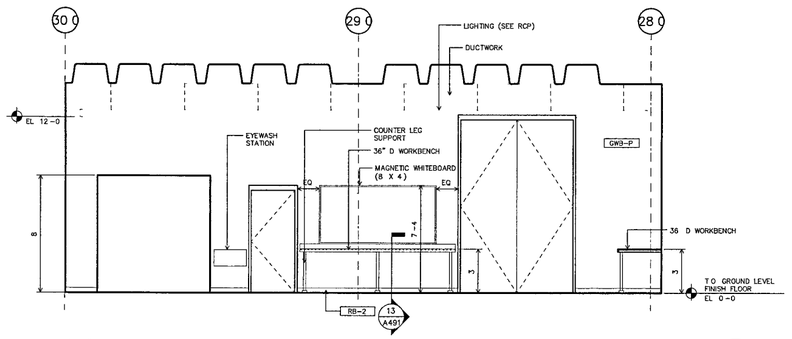

1-39 PRODUCTION STUDIO LOOKING WEST (11)

SCALE 1/4" = 1'-0"

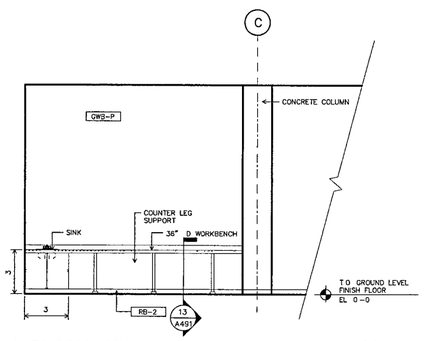

1-39 PRODUCTION STUDIO LOOKING NORTH (10)

SCALE 1/4" = 1'-0"

WILLIAM J. CLINTON PRESIDENTIAL CENTER

LITTLE ROCK, ARKANSAS

Architect

POLSHEK PARTNERSHIP LLP
320 West 13th Street
New York, New York 10014
212 807 7171

Coordinating Architects

POLK STANLEY YEARY ARCHITECTS Ltd
700 South Schiller Street
Little Rock, Arkansas 72201
501 376 0878

WITSELL EVANS RASCO
901 West Third Street
Little Rock, Arkansas 72201
501 374 5300

WOODS CARADINE ARCHITECTS
2200 South Main Street
Little Rock Arkansas 72206
501 374 4060

Landscape Architects

HARGREAVES ASSOCIATES
118 Magazine Street
Cambridge, Massachusettes 02139
617 661 0070

LANDSCAPE ARCHITECTURE, Inc.
2300 Cottondale Lane Suite 202
Little Rock Arkansas 72202
501 374 5610

Structural Engineer

LESLIE E ROBERTSON ASSOC , RLLP
30 Broad Street, 47th Floor
New York, New York 10004
212 750 9000

MEP Engineers

FLACK + KURTZ Inc
475 Fifth Avenue
New York, New York 10017
212 532 9600

CROMWELL ARCHITECTS ENGINEERS
101 South Spring Street
Little Rock, Arkansas 72201
501 372 2900

Curtainwall Consultant

R A. HEINTGES ARCHITECTS
126 Fifth Avenue 9th Floor
New York, New York 10011
212 652-2966

Seal

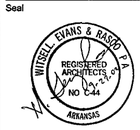

Issue	Date
100% Construction Documents	09/27/02
90% Progress Printing	08/30/02
100% Struct./CD Progress	07/01/02

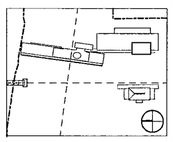

Job No 9908

Scale 1/4" = 1'-0"

Date September 27, 2002

Title

INTERIOR ELEVATIONS ARCHIVE

Sheet No

A431

FOR OFFICIAL USE ONLY

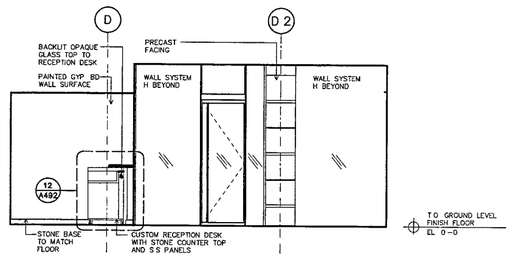

1–11 LOBBY / ARCHIVE OFFICE LOOKING SOUTH (31)

SCALE 1/4" = 1'-0"

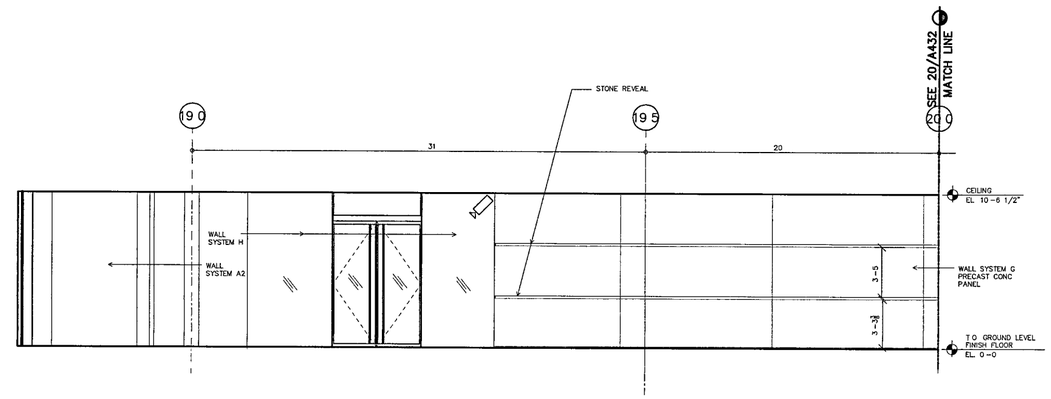

1–12 CORRIDOR LOOKING EAST (30)

SCALE 1/4" = 1'-0"

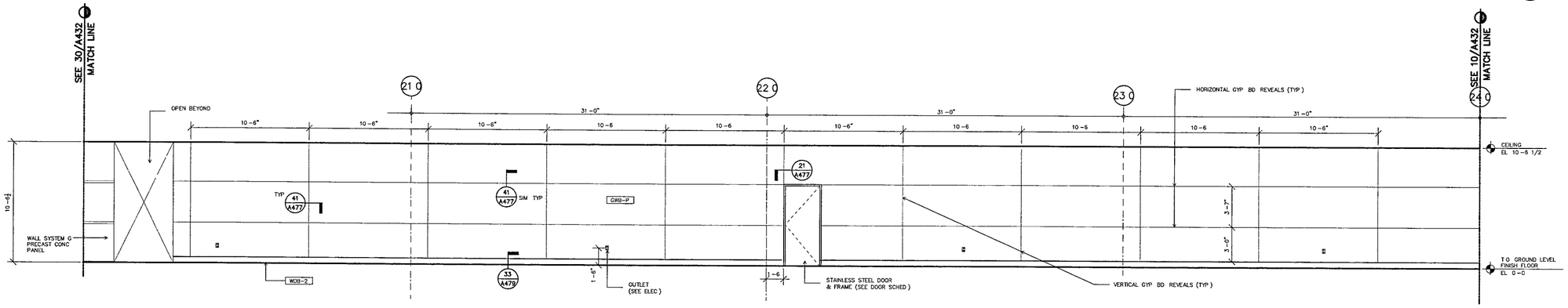

1–12 CORRIDOR LOOKING EAST (20)

SCALE 1/4" = 1'-0"

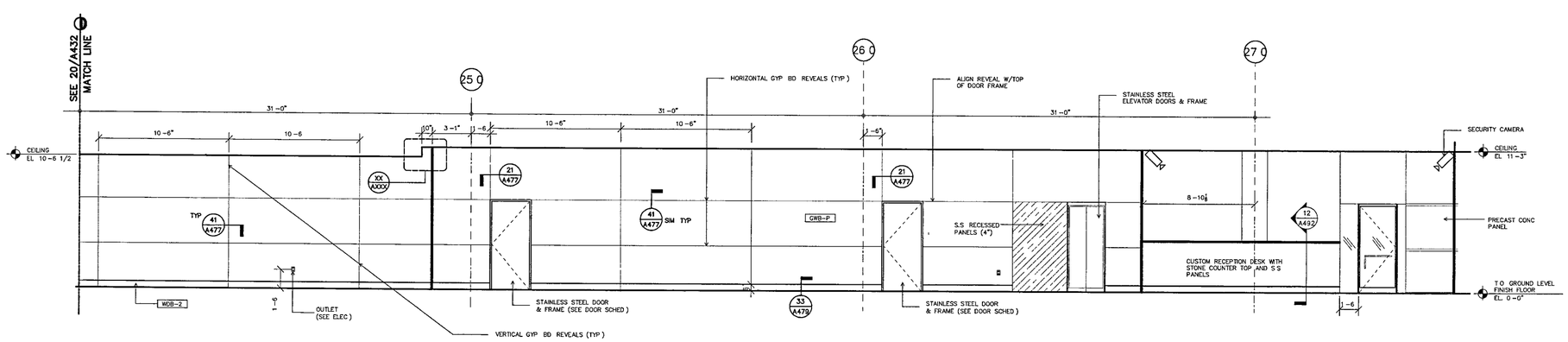

1–12 CORRIDOR / 1–11 LOBBY LOOKING EAST (10)

SCALE 1/4" = 1'-0"

WILLIAM J. CLINTON PRESIDENTIAL CENTER

LITTLE ROCK, ARKANSAS

Architect

POLSHEK PARTNERSHIP LLP
320 West 13th Street
New York, New York 10014
212 807 7171

Coordinating Architects

POLK STANLEY YEARY ARCHITECTS Ltd
700 South Schiller Street
Little Rock, Arkansas 72201
501 378 0878

WITSELL EVANS RASCO
501 West Third Street
Little Rock, Arkansas 72201
501 374 5300

WOODS CARADINE ARCHITECTS
2200 South Main Street
Little Rock, Arkansas 72206
501 374 4060

Landscape Architects

HARGREAVES ASSOCIATES
118 Magazine Street
Cambridge, Massachusettes 02139
617 661 0070

LANDSCAPE ARCHITECTURE, Inc.
2300 Cottondale Lane Suite 202
Little Rock, Arkansas 72202
501 374 5610

Structural Engineer

LESLIE E ROBERTSON ASSOC , RLLP
30 Broad Street, 47th Floor
New York, New York 10004
212 750 9000

MEP Engineers

FLACK + KURTZ Inc
475 Fifth Avenue
New York, New York 10017
212 532 9600

CROMWELL ARCHITECTS ENGINEERS
101 South Spring Street
Little Rock, Arkansas 72201
501 372 2900

Curtainwall Consultant

R. A. HEINTGES ARCHITECTS
126 Fifth Avenue, 9th Floor
New York, New York 10011
212 652-2966

Seal

WITSELL EVANS & RASCO, P.A. REGISTERED ARCHITECTS NO C-44 ARKANSAS

Issue	Date
100% Construction Documents	09/27/02
90% Progress Printing	08/30/02
100% Struct./CD Progress	07/01/02

Job No 9908

Scale 1/4" = 1'-0"

Date September 27, 2002

Title

INTERIOR ELEVATIONS ARCHIVE

Sheet No

A432

FOR OFFICIAL USE ONLY

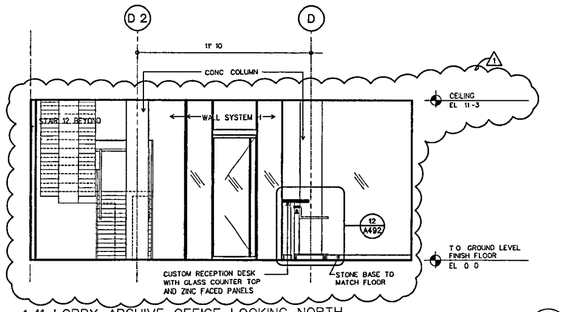

1-11 LOBBY ARCHIVE OFFICE LOOKING NORTH

SCALE 1/4" = 1'-0"

31

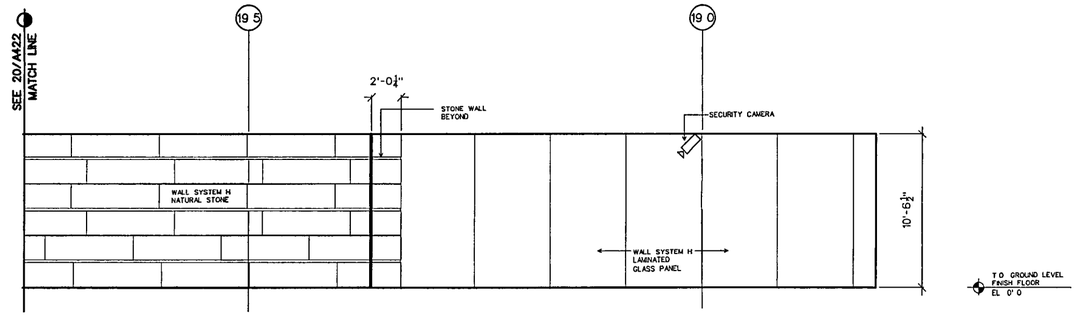

1-12 CORRIDOR LOOKING WEST

SCALE 1/4" = 1'-0"

30

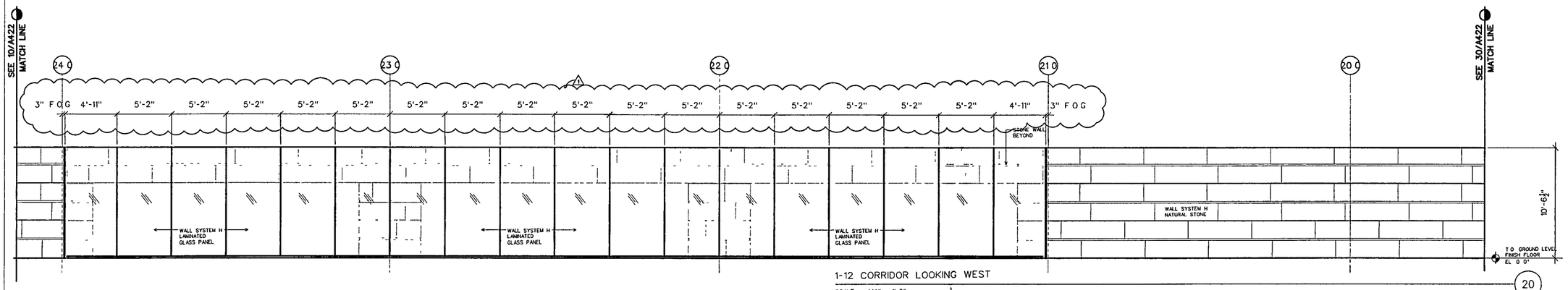

1-12 CORRIDOR LOOKING WEST

SCALE 1/4" = 1'-0"

20

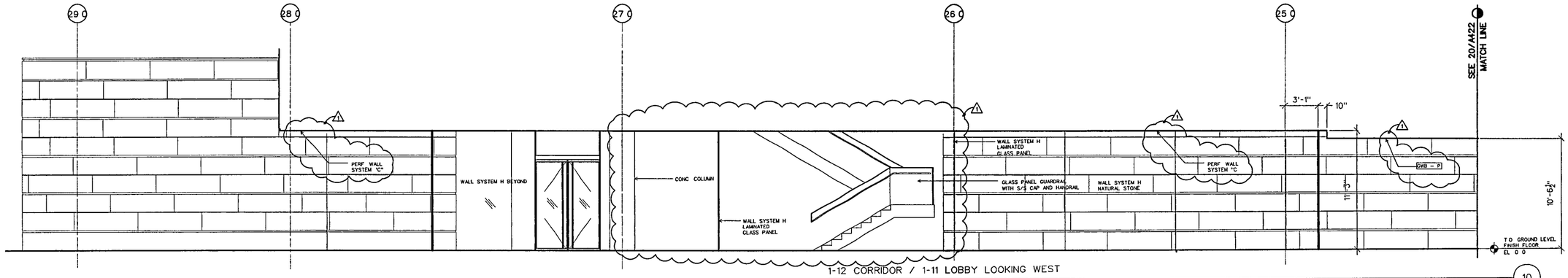

1-12 CORRIDOR / 1-11 LOBBY LOOKING WEST

SCALE 1/4" = 1'-0"

10

WILLIAM J. CLINTON PRESIDENTIAL CENTER

LITTLE ROCK, ARKANSAS

Architect

POLSHEK PARTNERSHIP LLP
320 West 13th Street
New York, New York 10014
212 807 7171

Coordinating Architects

POLK STANLEY YEARY ARCHITECTS Ltd
700 South Schiller Street
Little Rock, Arkansas 72201
501 378.0878

WITSELL EVANS RASCO
901 West Third Street
Little Rock, Arkansas 72201
501 374 5300

WOODS CARADINE ARCHITECTS
2200 South Main Street
Little Rock, Arkansas 72206
501 374.4060

Landscape Architects

HARGREAVES ASSOCIATES
118 Magazine Street
Cambridge Massachusettes 02139
617 661 0070

LANDSCAPE ARCHITECTURE, Inc
2300 Cottondale Lane Suite 202
Little Rock, Arkansas 72202
501 374 5610

Structural Engineer

LESLIE E ROBERTSON ASSOC , RLLP
30 Broad Street, 47th Floor
New York, New York 10004
212 750 9000

MEP Engineers

FLACK + KURTZ Inc.
475 Fifth Avenue
New York, New York 10017
212 532 9600

CROMWELL ARCHITECTS ENGINEERS
101 South Spring Street
Little Rock, Arkansas 72201
501 372.2900

Curtainwall Consultant

R. A. HEINTGES ARCHITECTS
126 Fifth Avenue, 9th Floor
New York, New York 10011
212 652 2966

Seal

WITSELL EVANS & RASCO P.A. REGISTERED ARCHITECTS 11-15-02 NO C44 ARKANSAS

Issue	Date
1 Addendum #2	11/15/02
100% Construction Documents	09/27/02
90% Progress Printing	08/30/02
100% Struct./CD Progress	07/01/02

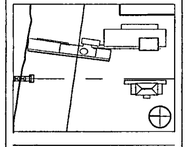

Job No 9908

Scale 1/4" = 1'-0"

Date September 27, 2002

Title

INTERIOR ELEVATIONS: ARCHIVE

Sheet No

A433

FOR OFFICIAL USE ONLY

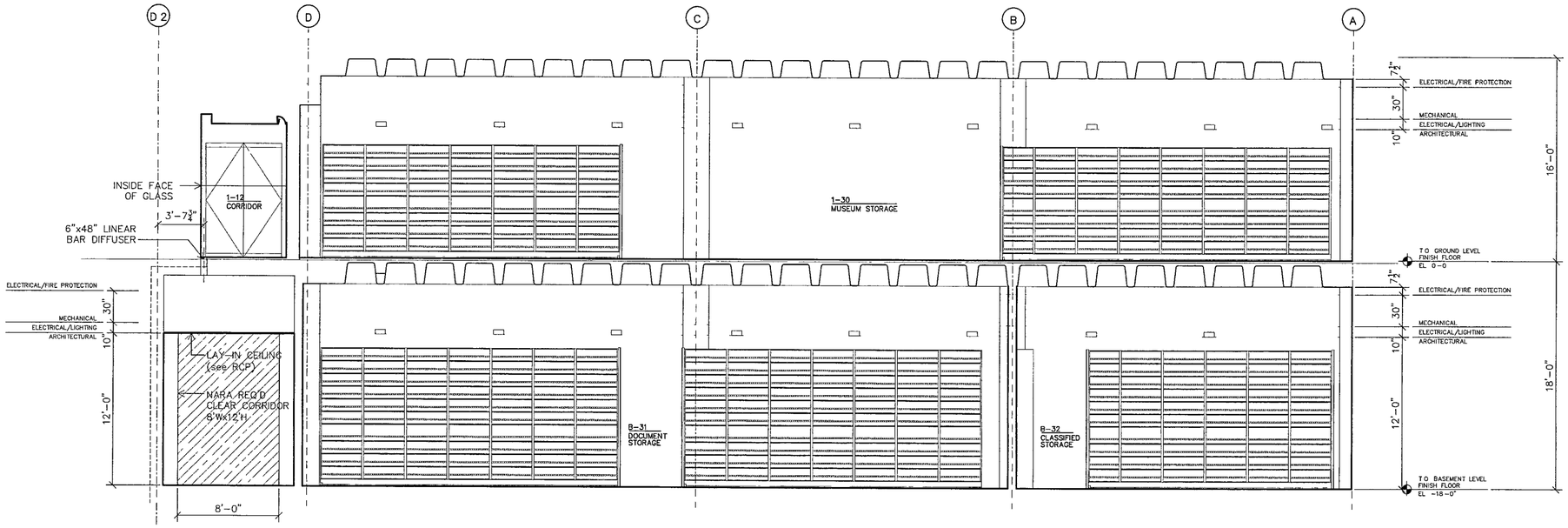

INTERIOR ELEVATION/ MEP COORDINATION AT ARCHIVE BUILDING MID-GRID 23/24 LOOKING NORTH

SCALE 1/4" = 1'-0"

10

WILLIAM J CLINTON PRESIDENTIAL CENTER

LITTLE ROCK, ARKANSAS

Architect

POLSHEK PARTNERSHIP LLP
320 West 13th Street
New York, New York 10014
212 807 7171

Coordinating Architects

POLK STANLEY YEARY ARCHITECTS Ltd
700 South Schiller Street
Little Rock, Arkansas 72201
501 378.0878

WITSELL EVANS RASCO
901 West Third Street
Little Rock, Arkansas 72201
501 374 5300

WOODS CARADINE ARCHITECTS
2200 South Main Street
Little Rock, Arkansas 72206
501 374 4060

Landscape Architects

HARGREAVES ASSOCIATES
118 Magazine Street
Cambridge Massachusettes 02139
617 661 0070

LANDSCAPE ARCHITECTURE, Inc
2300 Cottondale Lane Suite 202
Little Rock, Arkansas 72202
501 374 5610

Structural Engineer

LESLIE E ROBERTSON ASSOC., RLLP
30 Broad Street, 47th Floor
New York, New York 10004
212 750 9000

MEP Engineers

FLACK + KURTZ Inc
475 Fifth Avenue
New York, New York 10017
212 532 9600

CROMWELL ARCHITECTS ENGINEERS
101 South Spring Street
Little Rock, Arkansas 72201
501 372 2900

Curtainwall Consultant

R. A. HEINTGES ARCHITECTS
126 Fifth Avenue, 9th Floor
New York, New York 10011
212 652-2966

Seal

WITSELL EVANS & RASCO P.A. REGISTERED ARCHITECTS NO E-44 ARKANSAS

Issue	Date
100% Construction Documents	09/27/02
90% Progress Printing	08/30/02
100% Struct./CD Progress	07/01/02

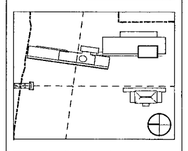

Job No 9908

Scale 1/4" = 1'-0"

Date September 27, 2002

Title

INTERIOR ELEVATIONS ARCHIVE

Sheet No

A434

FOR OFFICIAL USE ONLY

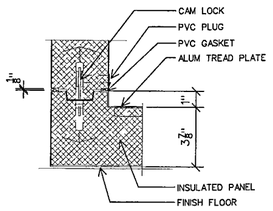

PANEL ASSEMBLY DETAIL (32)

SCALE 3" = 1'-0"

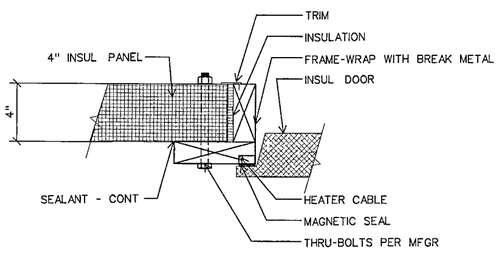

DOOR JAMB DETAIL (22)

SCALE 3" = 1'-0"

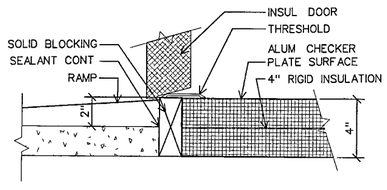

DOOR SILL DETAIL (12)

SCALE 3" = 1'-0"

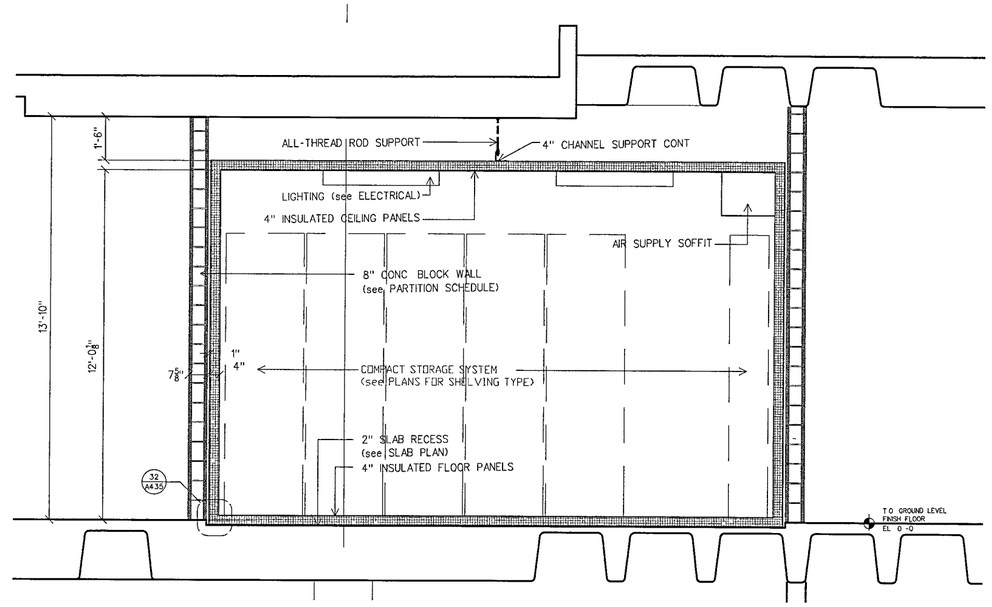

SECTION THROUGH A/V COLD ROOM LOOKING NORTH (20)

SCALE 1/2" = 1'-0"

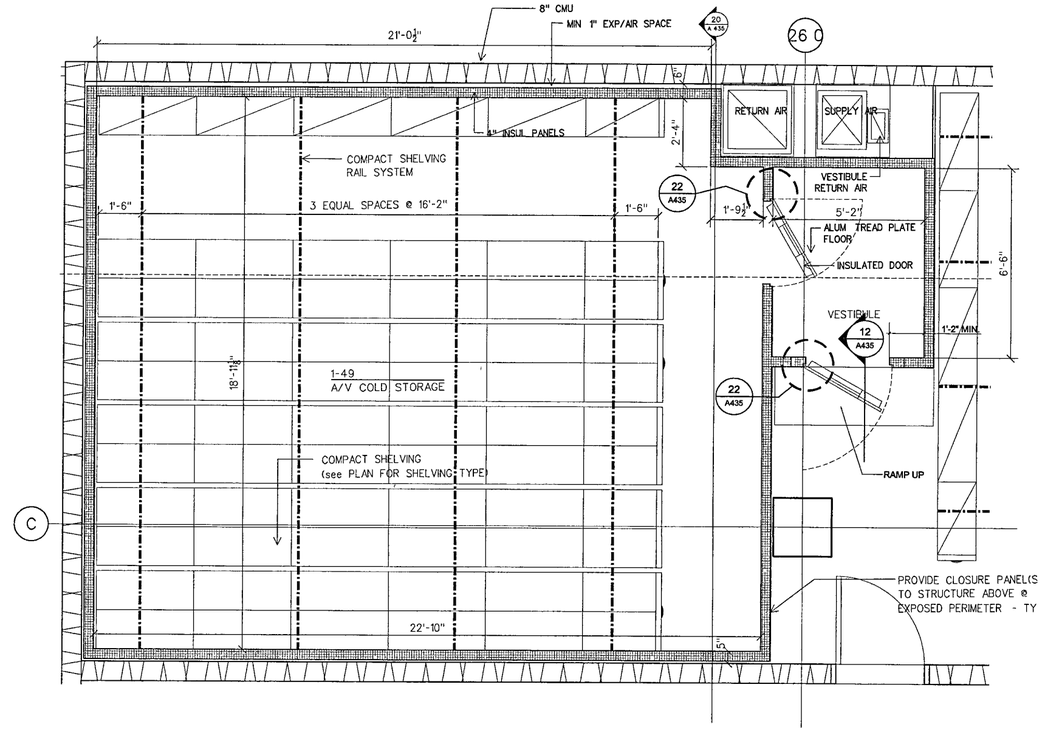

PLAN DETAIL (10)

SCALE 1/2" = 1'-0"

WILLIAM J CLINTON PRESIDENTIAL CENTER

LITTLE ROCK, ARKANSAS

Architect

POLSHEK PARTNERSHIP LLP
320 West 13th Street
New York, New York 10014
212 807 7171

Coordinating Architects

POLK STANLEY YEARY ARCHITECTS Ltd
700 South Schiller Street
Little Rock, Arkansas 72201
501 378 0878

WITSELL EVANS RASCO
901 West Third Street
Little Rock, Arkansas 72201
501 374 5300

WOODS CARADINE ARCHITECTS
2200 South Main Street
Little Rock, Arkansas 72206
501 374 4060

Landscape Architects

HARGREAVES ASSOCIATES
118 Magazine Street
Cambridge Massachusettes 02139
617 661 0070

LANDSCAPE ARCHITECTURE, Inc
2300 Cottondale Lane Suite 202
Little Rock, Arkansas 72202
501 374 5810

Structural Engineer

LESLIE E ROBERTSON ASSOC., RLLP
30 Broad Street, 47th Floor
New York, New York 10004
212 750 9000

MEP Engineers

FLACK + KURTZ Inc
475 Fifth Avenue
New York, New York 10017
212 532 9600

CROMWELL ARCHITECTS ENGINEERS
101 South Spring Street
Little Rock, Arkansas 72201
501 372 2900

Curtainwall Consultant

R. A. HEINTGES ARCHITECTS
126 Fifth Avenue, 9th Floor
New York, New York 10011
212 652-2966

Seal

WITSELL EVANS & RASCO P.A. REGISTERED ARCHITECTS NO C-44 ARKANSAS

Issue	Date
100% Construction Documents	09/27/02
90% Progress Printing	08/30/02

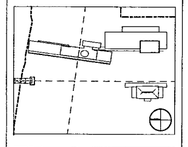

Job No 9908

Scale AS NOTED

Date September 27, 2002

Title COLD STORAGE PLANS, SECTIONS DETAILS

Sheet No A435

FOR OFFICIAL USE ONLY

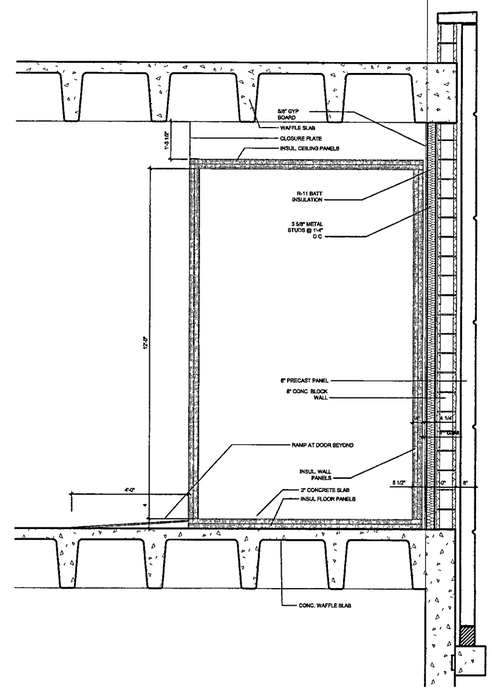

SECTION THROUGH NARA HOLDING LOOKING EAST

SCALE 1/2" = 1'-0"

20

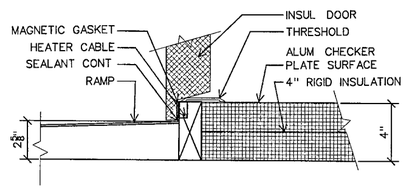

DOOR SILL DETAIL

SCALE 3" = 1'-0"

11

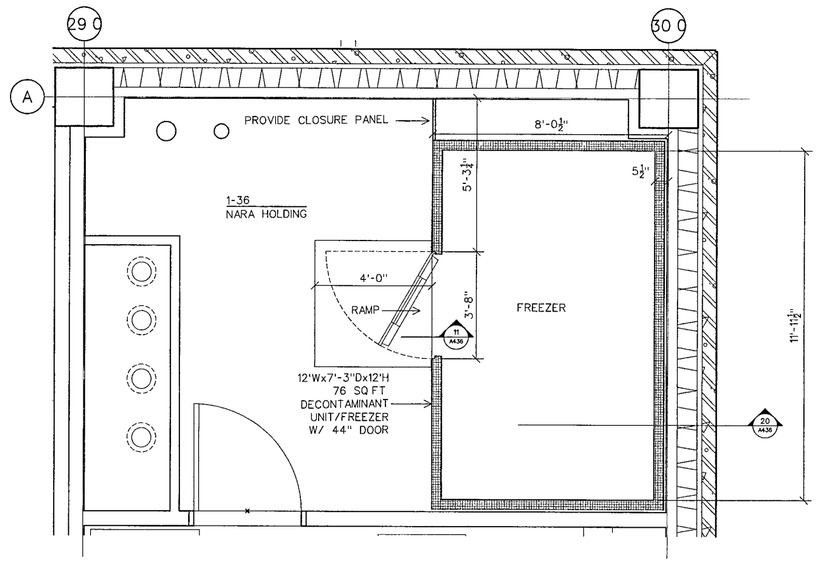

PARTIAL PLAN AT NARA STORAGE

SCALE 1/2" = 1'-0"

10

WILLIAM J. CLINTON PRESIDENTIAL CENTER

LITTLE ROCK, ARKANSAS

Architect

POLSHEK PARTNERSHIP LLP
320 West 13th Street
New York, New York 10014
212 807 7171

Coordinating Architects

POLK STANLEY YEARY ARCHITECTS Ltd
700 South Schiller Street
Little Rock, Arkansas 72201
501 378 0878

WITSELL EVANS RASCO
901 West Third Street
Little Rock, Arkansas 72201
501 374 5300

WOODS CARADINE ARCHITECTS
2200 South Main Street
Little Rock, Arkansas 72206
501 374 4060

Landscape Architects

HARGREAVES ASSOCIATES
118 Magazine Street
Cambridge Massachusettes 02139
617 661 0070

LANDSCAPE ARCHITECTURE Inc
2300 Cottondale Lane Suite 202
Little Rock, Arkansas 72202
501 374 5610

Structural Engineer

LESLIE E ROBERTSON ASSOC., RLLP
30 Broad Street, 47th Floor
New York, New York 10004
212 750 9000

MEP Engineers

FLACK + KURTZ Inc
475 Fifth Avenue
New York, New York 10017
212 532.9600

CROMWELL ARCHITECTS ENGINEERS
101 South Spring Street
Little Rock, Arkansas 72201
501 372.2900

Curtainwall Consultant

R. A. HEINTGES ARCHITECTS
126 Fifth Avenue, 9th Floor
New York, New York 10011
212 652 2966

Seal

WITSELL EVANS & RASCO, P.A. REGISTERED ARCHITECTS NO C-44 ARKANSAS

Issue	Date
100% Construction Documents	09/27/02
90% Progress Printing	08/30/02

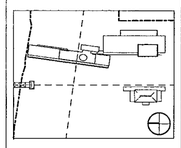

Job No 9908

Scale AS NOTED

Date September 27 2002

Title NARA HOLDING PLANS SECTIONS, DETAILS

Sheet No A436

FOR OFFICIAL USE ONLY

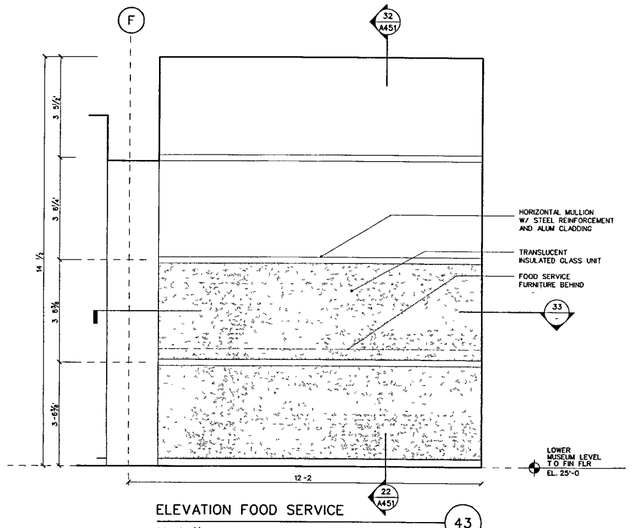

ELEVATION FOOD SERVICE

SCALE ½" = 1-0 detail-interior glazing 43

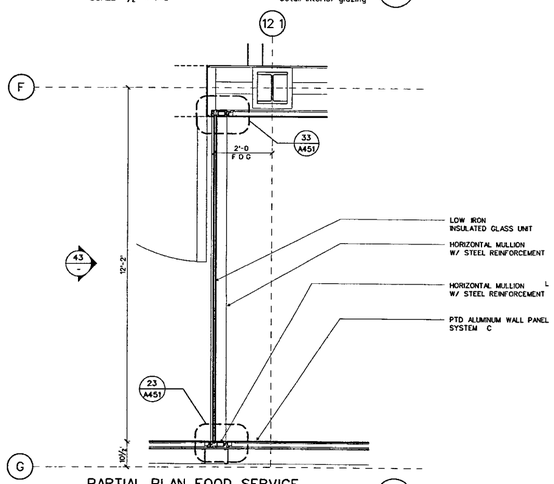

PARTIAL PLAN FOOD SERVICE

SCALE ½ = 1-0 detail-interior glazing 33

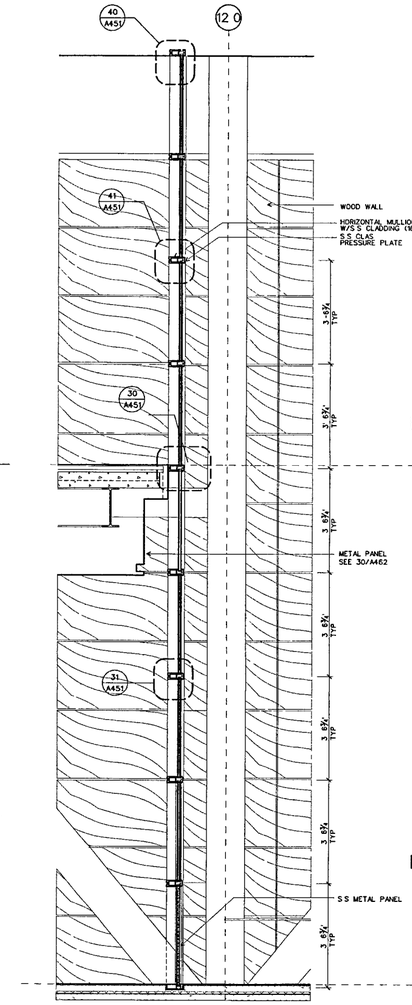

SECTION INTERIOR GLAZING GREAT HALL

SCALE ½' = 1'-0 detail-interior glazing 32

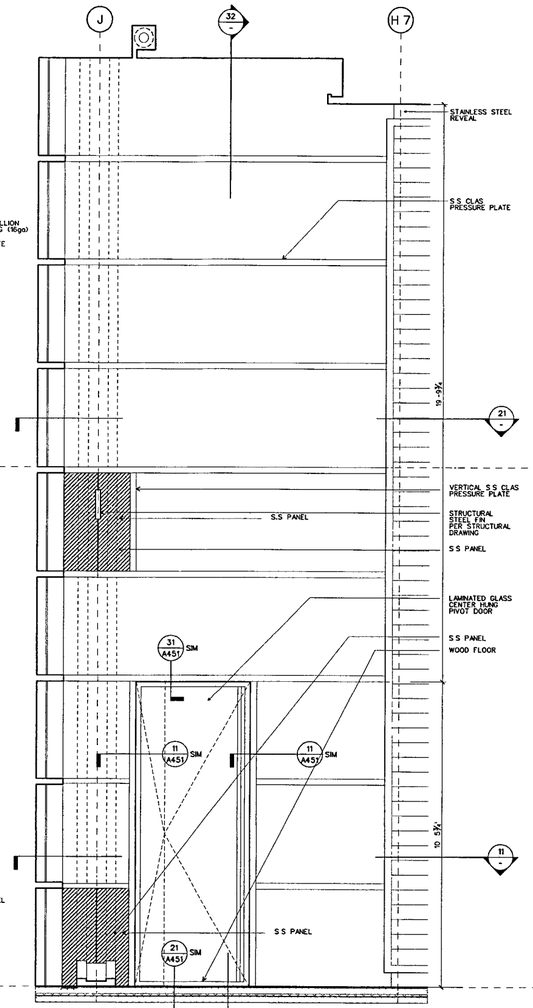

ELEVATION

SCALE ½" = 1-0 detail-interior glazing 31

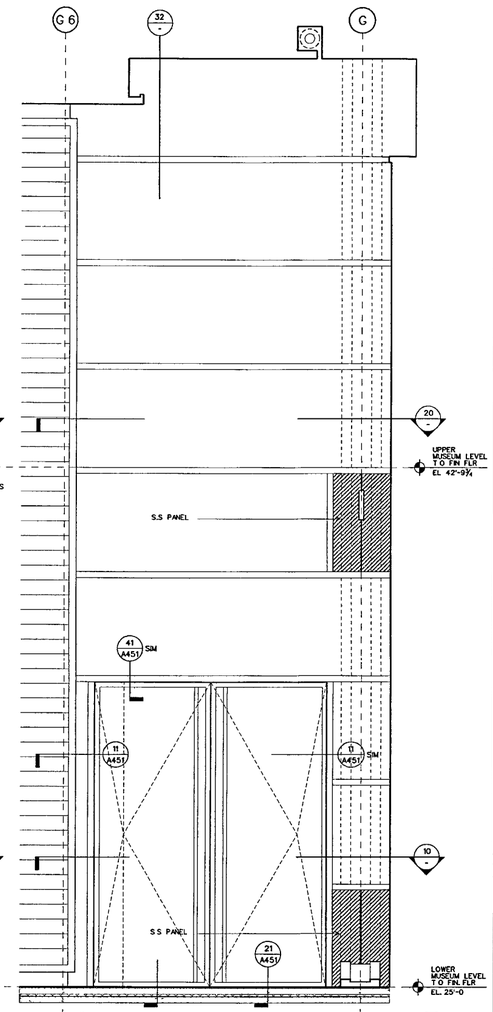

ELEVATION

SCALE ½" = 1'-0" detail-interior glazing 30

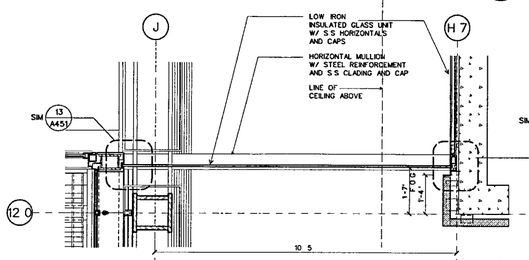

PLAN-UPPER MUSEUM LEVEL

SCALE ½ = 1'-0 detail-interior glazing 21

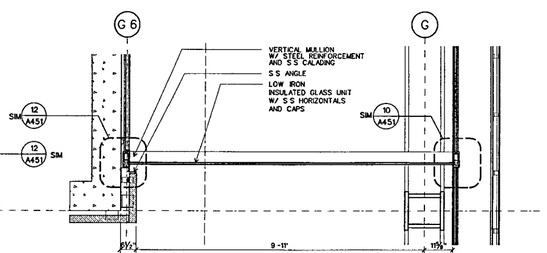

PLAN-UPPER MUSEUM LEVEL

SCALE ½" = 1-0 detail-interior glazing 20

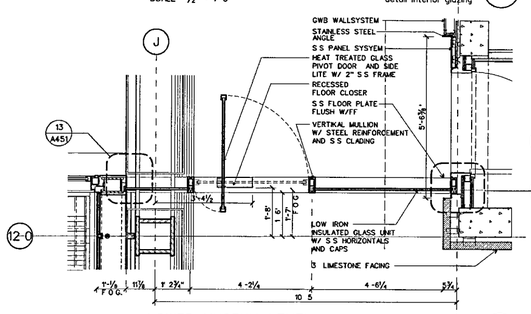

LOWER MUSEUM LEVEL

SCALE ½" = 1-0" detail-interior glazing 11

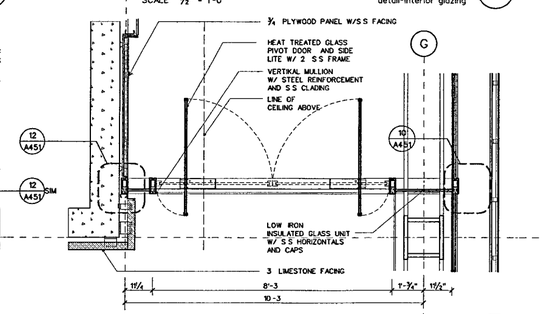

LOWER MUSEUM LEVEL

SCALE ½" = 1'-0" detail-interior glazing 10

WILLIAM J CLINTON PRESIDENTIAL CENTER

LITTLE ROCK, ARKANSAS

Architect

POLSHEK PARTNERSHIP LLP
320 West 13th Street
New York, New York 10014
212.807 7171

Coordinating Architects

POLK STANLEY YEARY ARCHITECTS Ltd
700 South Schiler Street
Little Rock, Arkansas 72201
501 378 0878

WITSELL EVANS RASCO
901 West Third Street
Little Rock, Arkansas 72201
501 374 5300

WOODS CARADINE ARCHITECTS
2200 South Main Street
Little Rock Arkansas 72206
501 374 4060

Landscape Architects

HARGREAVES ASSOCIATES
118 Magazine Street
Cambridge Massachusettes 02139
617 661 0070

LANDSCAPE ARCHITECTURE Inc.
2300 Cottondale Lane Suite 202
Little Rock Arkansas 72202
501 374 5610

Structural Engineer

LESLIE E. ROBERTSON ASSOC RLLP
30 Broad Street, 47th Floor
New York, New York 10004
212 750 9000

MEP Engineers

FLACK + KURTZ Inc.
475 Fifth Avenue
New York New York 10017
212 532 9600

CROMWELL ARCHITECTS ENGINEERS
101 South Spring Street
Little Rock, Arkansas 72201
501 372 2900

Curtainwall Consultant

R A. HEINTGES ARCHITECTS
126 Fifth Avenue, 9th Floor
New York, New York 10011
212 652-2966

Seal

Issue	Date
100% Construction Documents	09/27/02
90% Progress Printing	08/30/02
100% Struct./ CD Progress*	07/01/02

*New Former A450 details on A520 dwgs

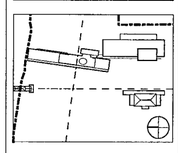

Job No 9908

Scale 1/2" = 1-0"

Date September 27, 2002

Title

MUSEUM INTERIOR DETAILS INTERIOR STOREFRONT SYSTEM

Sheet No

A450

FOR OFFICIAL USE ONLY

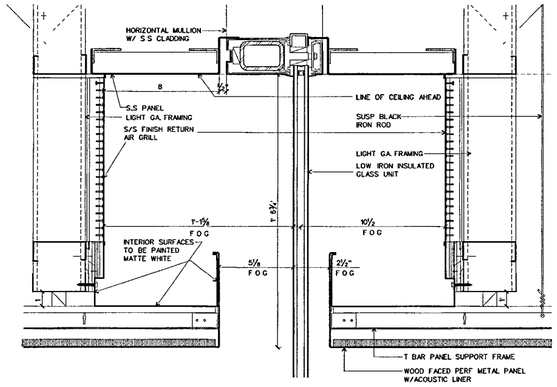

TYP. HORIZONTAL MULLION WITH LOWER CEILING 42
SCALE 3 = 1'-0" detail/interior glazing-01

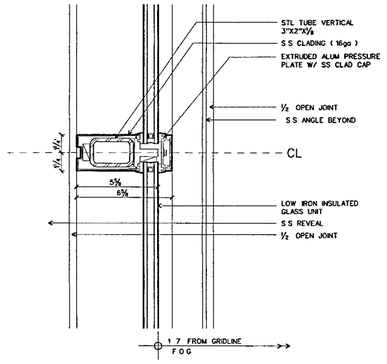

TYP. HORIZONTAL MULLION 41
SCALE 3 = 1-0 detail/interior glazing-01

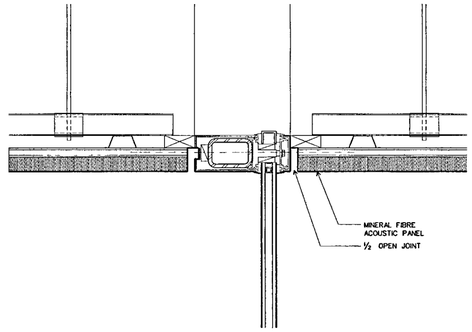

TYP. HORIZONTAL MULLION AT CEILING 40
SCALE 3 ' = 1-0 detail/interior glazing-01

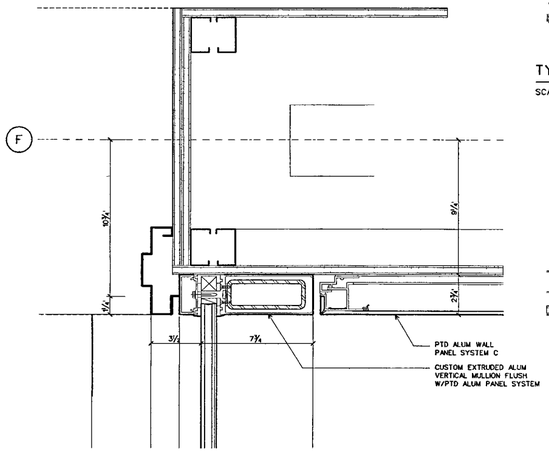

PLAN DETAIL AT FOOD SERVICE CORE BUILDING 33
SCALE 3 = 1-0" detail/interior glazing-01

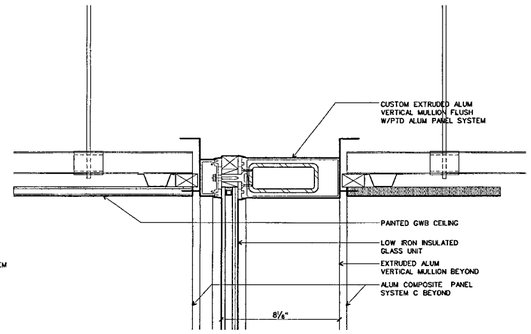

DETAIL AT CEILING OF FOOD SERVICE 32
SCALE 3 = 1-0 detail/interior glazing-01

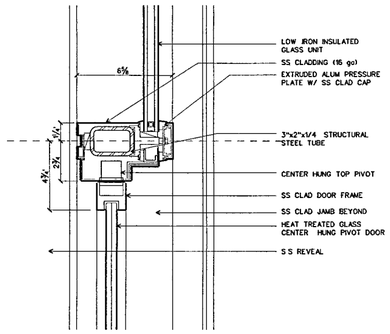

TYPICAL HORIZONTAL AT DOOR HEAD 31
SCALE 3 " = 1-0 detail/interior glazing-01

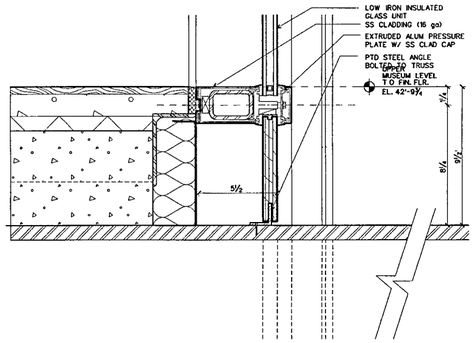

SECTION AT SLAB UPPER LEVEL 30
SCALE 3 ' = 1-0' detail/interior glazing-01

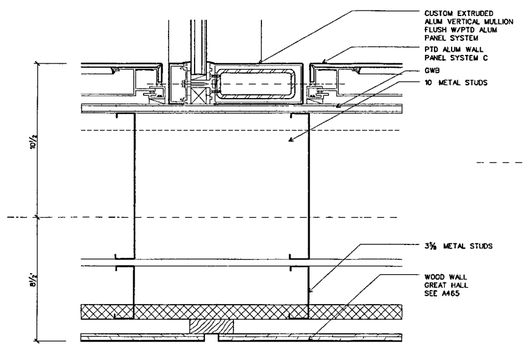

PLAN DETAIL AT FOOD SERVICE / GREAT HALL 23
SCALE 3 " = 1-0 detail/interior glazing-01

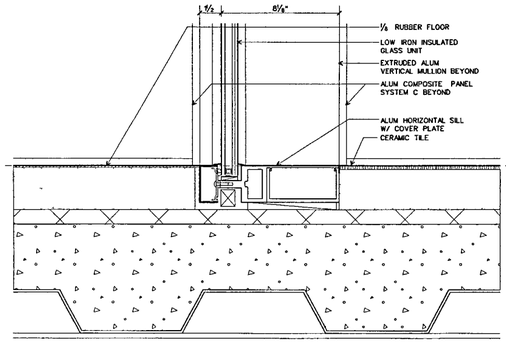

DETAIL AT FLOOR OF FOOD SERVICE 22
SCALE 3 " = 1'-0 detail/interior glazing-01

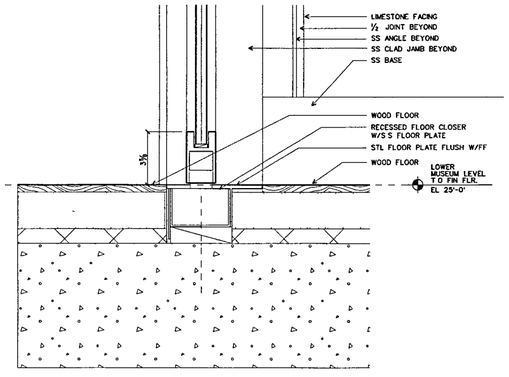

DETAIL AT DOOR CLOSER 21
SCALE 3 " = 1'-0" detail/interior glazing-01

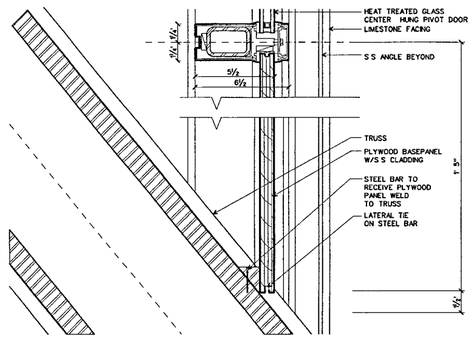

DETAIL AT DIAGONAL 20
SCALE 3 " = 1'-0' detail/interior glazing-01

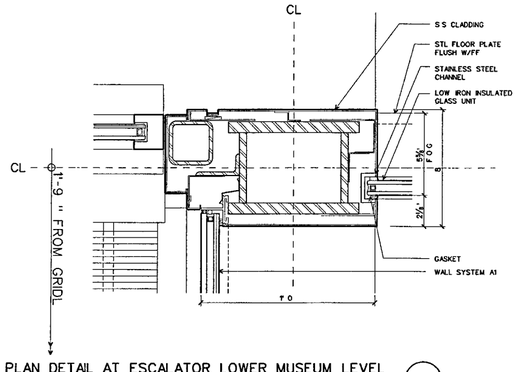

PLAN DETAIL AT ESCALATOR LOWER MUSEUM LEVEL 13
SCALE 3 = 1-0 detail/interior glazing-01

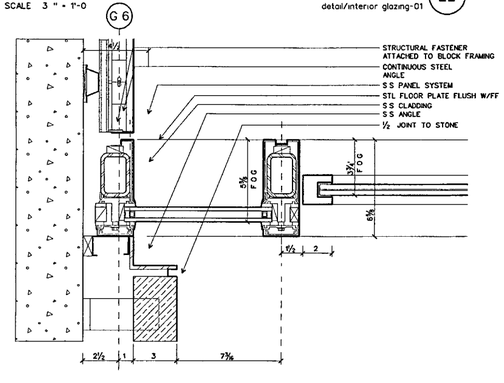

DETAIL AT STAIR 4 12
SCALE 3 ' = 1-0' detail/interior glazing-01

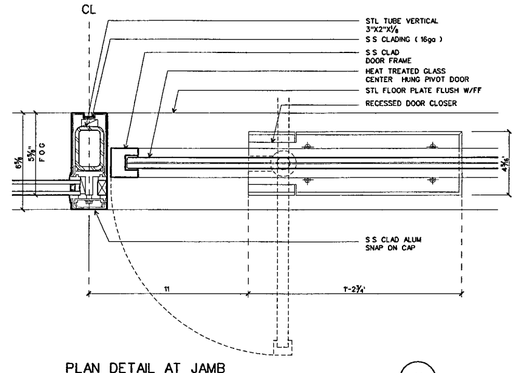

PLAN DETAIL AT JAMB 11
SCALE 3 " = 1'-0" detail/interior glazing-01

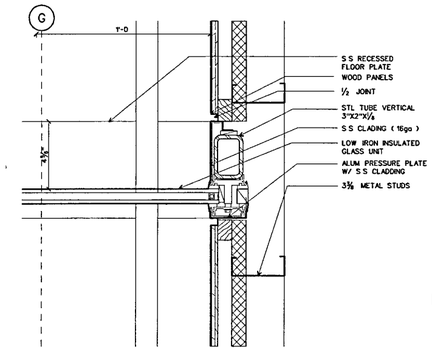

PLAN DETAIL AT WOOD WALL 10
SCALE 3" = 1'-0' detail/interior glazing-01

WILLIAM J CLINTON PRESIDENTIAL CENTER

LITTLE ROCK, ARKANSAS

Architect

POLSHEK PARTNERSHIP LLP
320 West 13th Street
New York New York 10014
212 807 7171

Coordinating Architects

POLK STANLEY YEARY ARCHITECTS Ltd
700 South Schiller Street
Little Rock, Arkansas 72201
501 378 0878

WITSELL EVANS RASCO
901 West Third Street
Little Rock, Arkansas 72201
501.374 6300

WOODS CARADINE ARCHITECTS
2200 South Main Street
Little Rock, Arkansas 72206
501 374 4060

Landscape Architects

HARGREAVES ASSOCIATES
118 Magazine Street
Cambridge, Massachusettes 02139
617 661 0070

LANDSCAPE ARCHITECTURE Inc.
2300 Cottondale Lane Suite 202
Little Rock, Arkansas 72202
501 374 5610

Structural Engineer

LESLIE E. ROBERTSON ASSOC RLLP
30 Broad Street, 47th Floor
New York, New York 10004
212 750 9000

MEP Engineers

FLACK + KURTZ Inc.
475 Fifth Avenue
New York, New York 10017
212 532 9600

CROMWELL ARCHITECTS ENGINEERS
101 South Spring Street
Little Rock, Arkansas 72201
501 372 2900

Curtainwall Consultant

R. A. HEINTGES ARCHITECTS
126 Fifth Avenue 9th Floor
New York New York 10011
212.652-2966

Seal

Issue	Date
100% Construction Documents	09/27/02
90% Progress Printing	08/30/02
100% Struct./ CD Progress	07/01/02

*New Former A451 details on A523 1

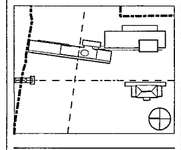

Job No 9908

Scale 3" = 1'-0"

Date September 27, 2002

Title MUSEUM BUILDING INTERIOR DETAILS INTERIOR STOREFRONT SYSTEM

Sheet No. A451

FOR OFFICIAL USE ONLY

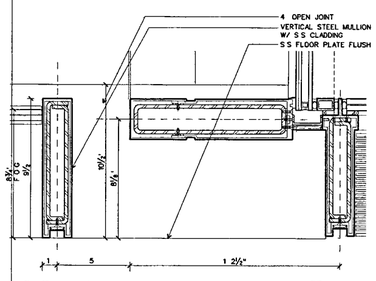

DETAIL AT SOUTH-EAST CORNER (34)
SCALE 3 " = 1'-0" D-INTERIOR-GLAZING-02

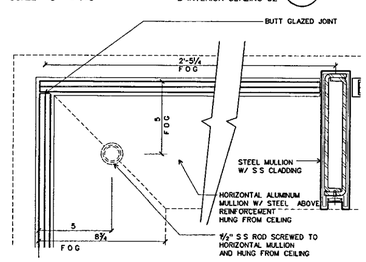

CORNER DETAIL GIFT SHOP GLAZING (24)
SCALE 3 = 1'-0" D-INTERIOR-GLAZING-02

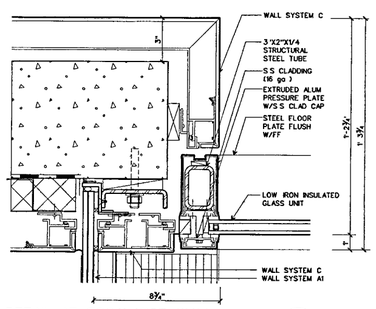

DETAIL AT ESCALATOR WALL (14)
SCALE 3 " = 1'-0" D-INTERIOR-GLAZING-02

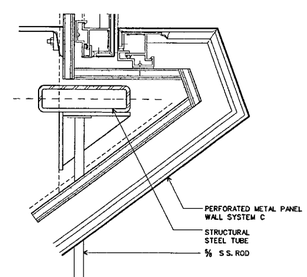

DETAIL AT BELLY (33)
SCALE 3 " = 1-0 D-INTERIOR-GLAZING-02

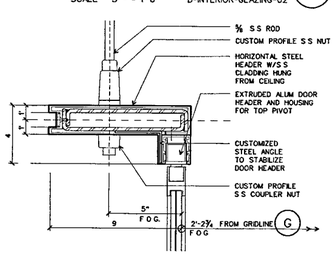

DOOR HEAD GIFT SHOP (23)
SCALE 3 " = 1-0 D-INTERIOR-GLAZING-02

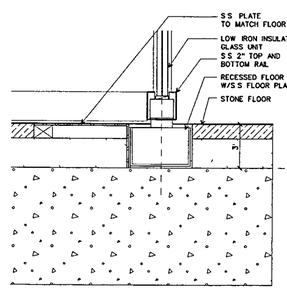

DETAIL FLOOR CLOSER SHOP (13)
SCALE 3 " = 1-0 D-INTERIOR-GLAZING-02

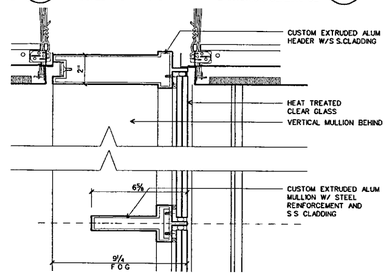

DETAIL AT CEILING (32)
SCALE 3 " = 1'-0 D-INTERIOR-GLAZING-02

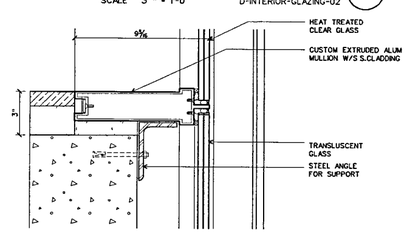

DETAIL AT ESCALATOR LANDING (22)
SCALE 3 " = 1'-0" D-INTERIOR-GLAZING-02

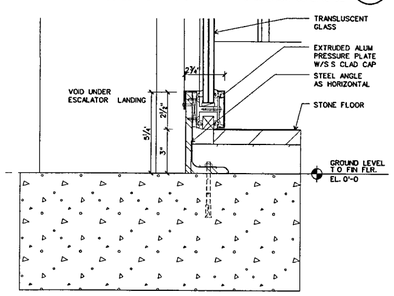

DETAIL AT FLOOR (12)
SCALE 3 = 1-0 D-INTERIOR-GLAZING-02

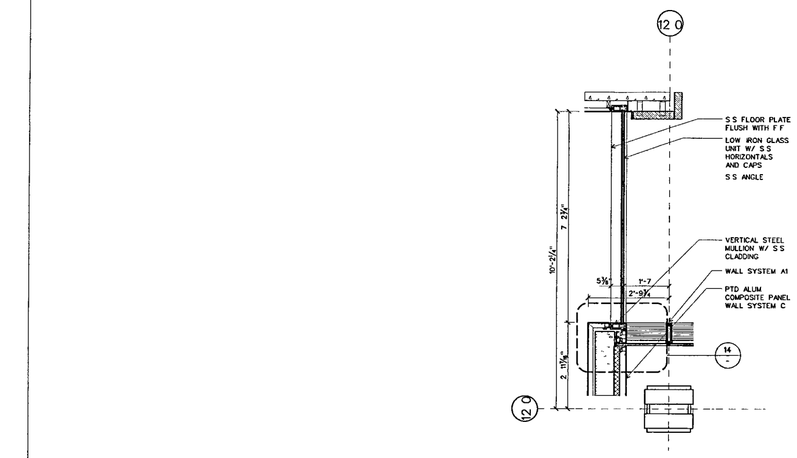

PLAN AT ESCALATOR LANDING (43)
SCALE 3 " = 1-0 D-INTERIOR-GLAZING-02

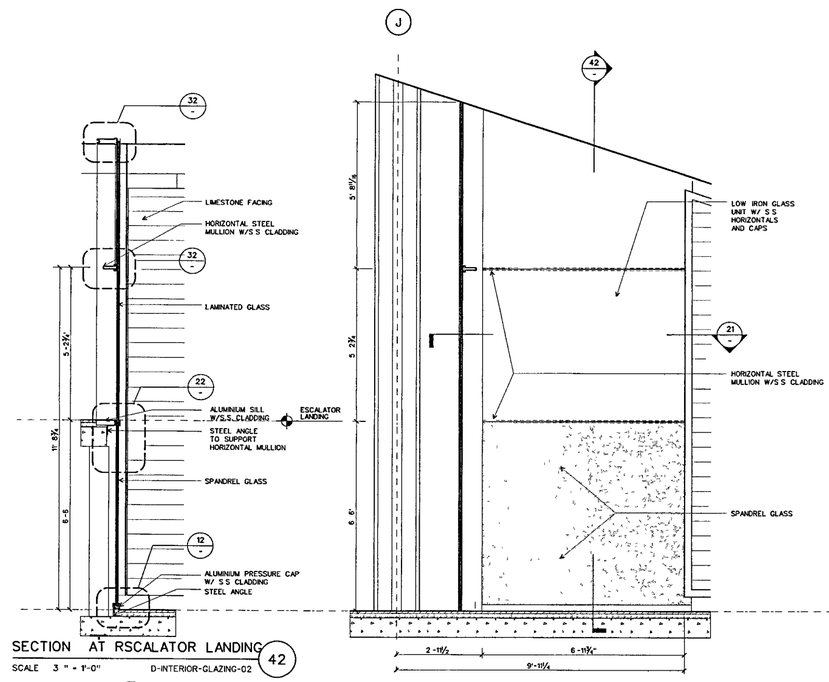

SECTION AT RSCALATOR LANDING (42)
SCALE 3 " = 1'-0" D-INTERIOR-GLAZING-02

ELEVATION AT ESCALATOR LANDING (41)
SCALE ½ = 1-0

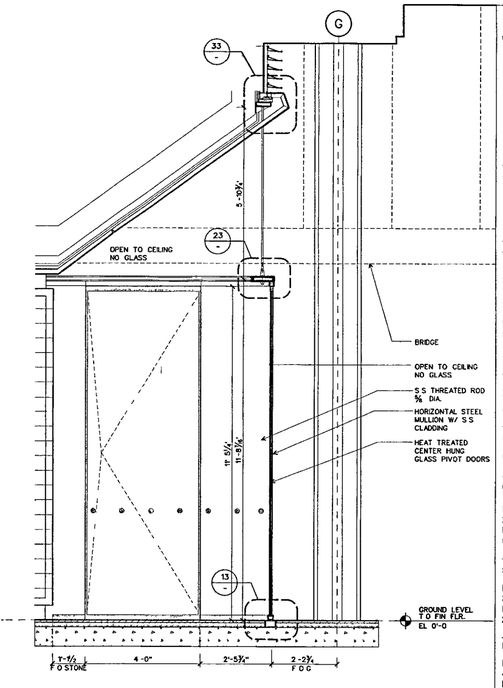

ELEVATION GLASS DOOR AT STAIR (40)
SCALE ½" = 1-0

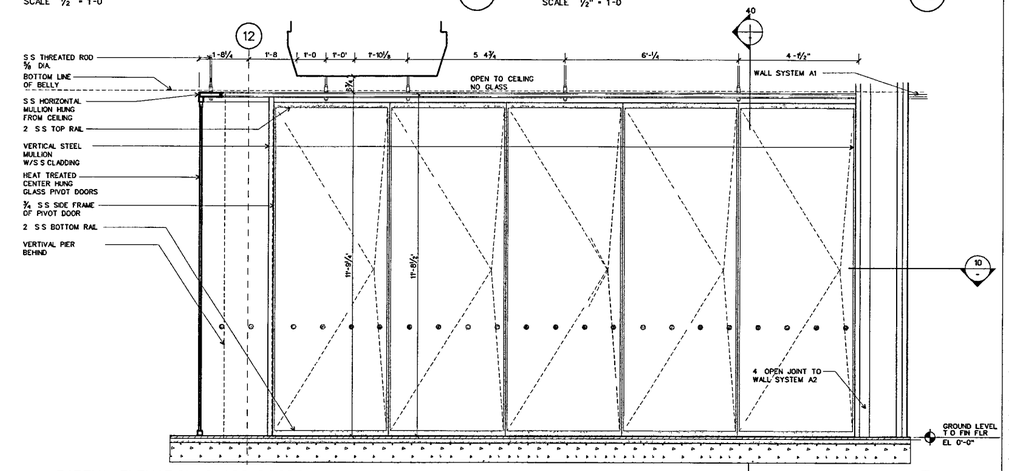

PARTIAL ELEVATION GLASS DOORS (20)
SCALE ½" = 1-0" D-INTERIOR-GLAZING-02

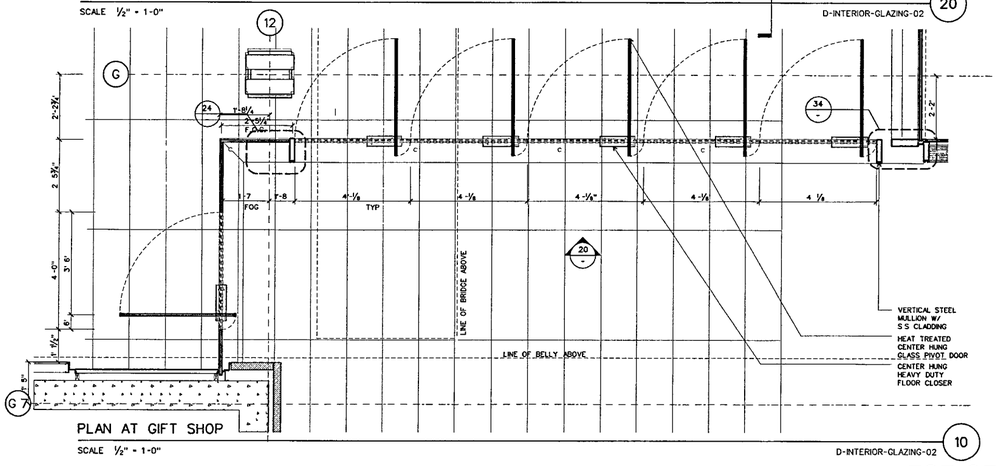

PLAN AT GIFT SHOP (10)
SCALE ½" = 1-0" D-INTERIOR-GLAZING-02

WILLIAM J CLINTON PRESIDENTIAL CENTER

LITTLE ROCK, ARKANSAS

Architect

POLSHEK PARTNERSHIP LLP
320 West 13th Street
New York, New York 10014
212 807 7171

Coordinating Architects

POLK STANLEY YEARY ARCHITECTS Ltd
700 South Schiller Street
Little Rock, Arkansas 72201
501 378 0878

WITSELL EVANS RASCO
901 West Third Street
Little Rock, Arkansas 72201
501 374 5300

WOODS CARADINE ARCHITECTS
2200 South Main Street
Little Rock, Arkansas 72206
501 374.4060

Landscape Architects

HARGREAVES ASSOCIATES
118 Magazine Street
Cambridge Massachusettes 02139
617 661 0070

LANDSCAPE ARCHITECTURE, Inc.
2300 Cottondale Lane Suite 202
Little Rock, Arkansas 72202
501 374 5810

Structural Engineer

LESLIE E ROBERTSON ASSOC , RLLP
30 Broad Street, 47th Floor
New York, New York 10004
212.750 9000

MEP Engineers

FLACK + KURTZ Inc
475 Fifth Avenue
New York, New York 10017
212.532.9600

CROMWELL ARCHITECTS ENGINEERS
101 South Spring Street
Little Rock, Arkansas 72201
501 372.2900

Curtainwall Consultant

R. A. HEINTGES ARCHITECTS
125 Fifth Avenue, 9th Floor
New York, New York 10011
212.652-2966

Seal

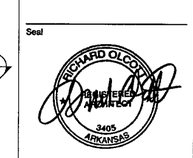

Issue	Date
100% Construction Documents	09/27/02
90% Progress Printing	08/30/02
100% Struct./ CD Progress	07/01/02

*New Former A452 details on A520 dwgs

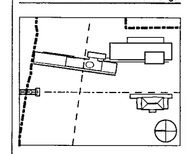

Job No 9908

Scale 1'-1/2" / 3" = 1'-0"

Date September 27, 2002

Title MUSEUM BUILDING INTERIOR DETAILS INTERIOR STOREFRONT SYSTEMS

Sheet No A452

FOR OFFICIAL USE ONLY

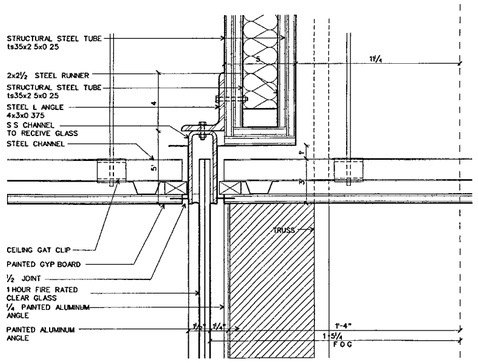

DETAIL AT CEILING

SCALE 3 = 1-0 detail/interior glazing03 42

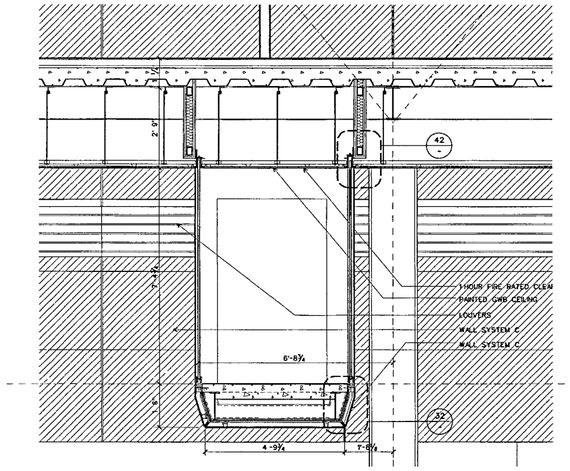

CROSS SECTION

SCALE ½ = 1-0 detail/interior glazing 03 41

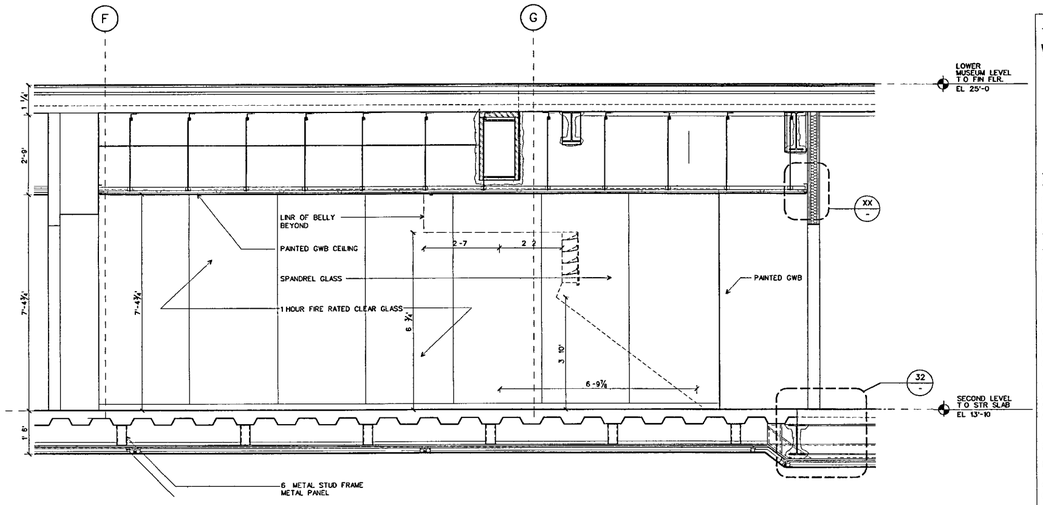

BRIDGE INTERIOR ELEVATION

SCALE ½ = 1-0 detail/interior glazing 03 40

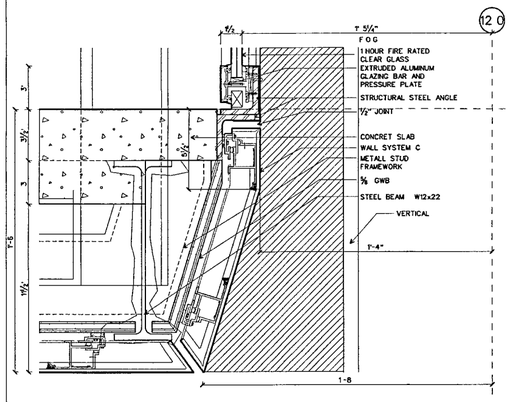

DETAIL AT FLOOR

SCALE 3 " = 1'-0" detail/interior glazing03 32

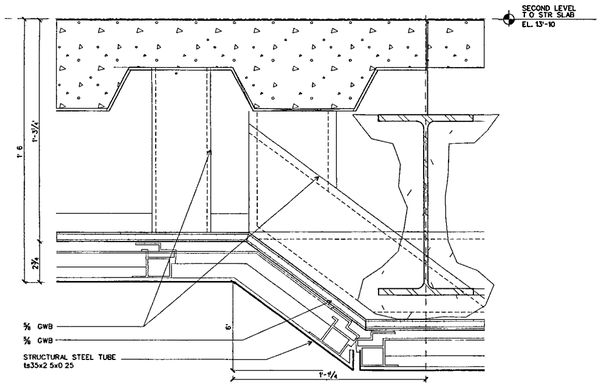

DETAIL AT BRIDGE BUILDING WALL SYSTEM C

SCALE 3 " = 1'-0" detail/interior glazing03 31

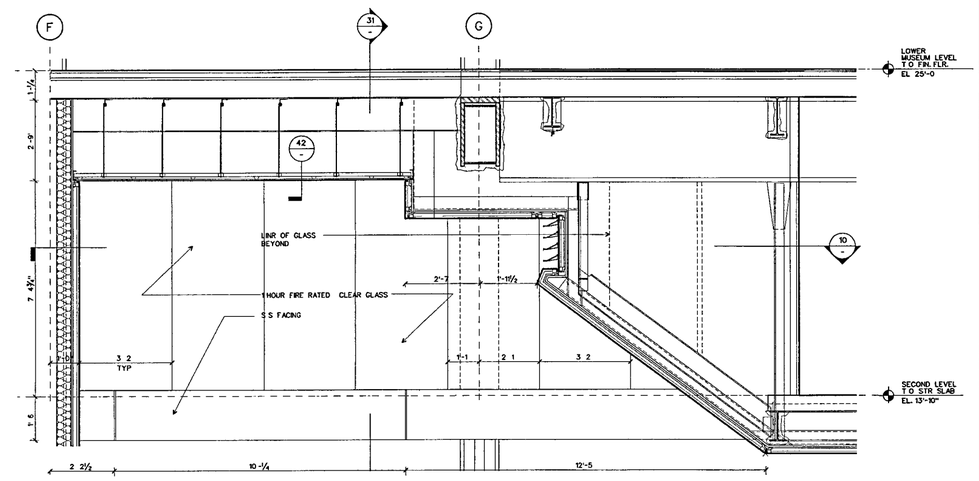

ELEVATION

SCALE ½' = 1-0 detail/interior glazing 03 30

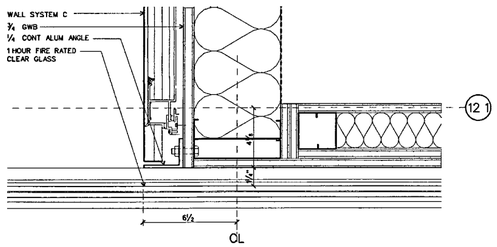

PLAN DETAIL AT METAL PANEL TERMINATION

SCALE 3 " = 1-0 detail/interior glazing03 22

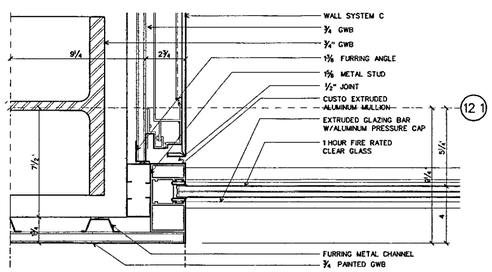

PLAN DETAIL AT ELEVATOR CORE

SCALE 3 " = 1'-0" detail/interior glazing03 21

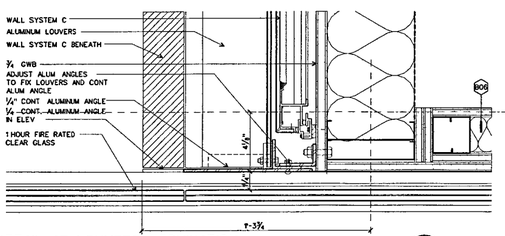

PLAN DETAIL AT LOUVERS TERMINATION

SCALE 3 " = 1'-0" detail/interior glazing03 12

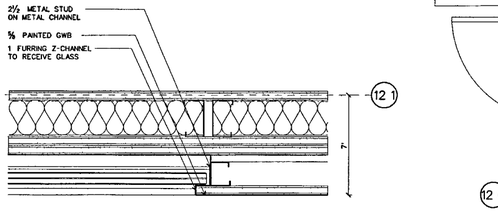

PLAN DETAIL AT INTERIOR GWB

SCALE 3 " = 1'-0' detail/interior glazing03 11

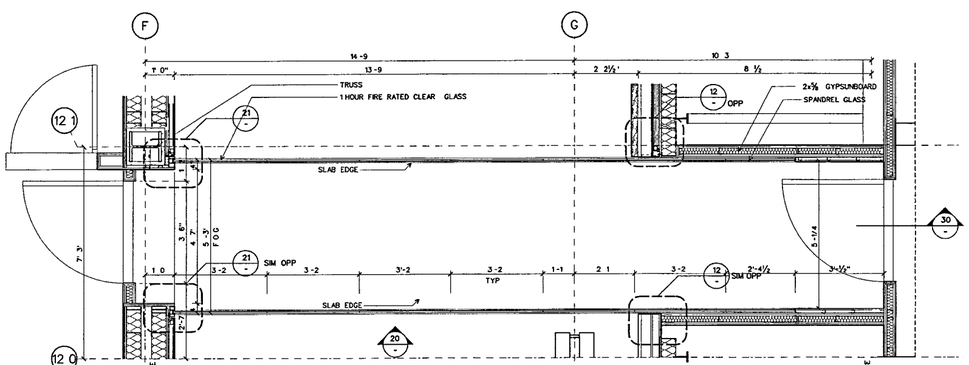

PLAN - SECOND LEVEL

SCALE ½ = 1'-0 detail/interior glazing 03 10

WILLIAM J CLINTON PRESIDENTIAL CENTER

LITTLE ROCK, ARKANSAS

Architect

POLSHEK PARTNERSHIP LLP
320 West 13th Street
New York, New York 10014
212.807 7171

Coordinating Architects

POLK STANLEY YEARY ARCHITECTS Ltd
700 South Schiller Street
Little Rock, Arkansas 72201
501 378 0878

WITSELL EVANS RASCO
901 West Third Street
Little Rock, Arkansas 72201
501 374 5300

WOODS CARADINE ARCHITECTS
2200 South Main Street
Little Rock, Arkansas 72206
501 374 4060

Landscape Architects

HARGREAVES ASSOCIATES
118 Magazine Street
Cambridge, Massachusettes 02139
617 661 0070

LANDSCAPE ARCHITECTURE, Inc.
2300 Colbondale Lane Suite 202
Little Rock, Arkansas 72202
501 374 5610

Structural Engineer

LESLIE E ROBERTSON ASSOC RLLP
30 Broad Street, 47th Floor
New York, New York 10004
212 750 9000

MEP Engineers

FLACK + KURTZ Inc.
475 Fifth Avenue
New York, New York 10017
212 532.9600

CROMWELL ARCHITECTS ENGINEERS
101 South Spring Street
Little Rock, Arkansas 72201
501 372.2900

Curtainwall Consultant

R. A. HEINTGES ARCHITECTS
126 Fifth Avenue, 9th Floor
New York, New York 10011
212.652-2966

Seal

RICHARD OLCOTT
REGISTERED ARCHITECT
3405
ARKANSAS

Issue	Date
100% Construction Documents	09/27/02
90% Progress Printing	08/30/02
100% Struct./ CD Progress	07/01/02

Job No 9908

Scale 1/2"/1 1/2"/3" = 1' 0"

Date September 27, 2002

Title MUSEUM BUILDING INTERIOR DETAILS INTERIOR STOREFRONT SYSTEMS

Sheet No A453

FOR OFFICIAL USE ONLY

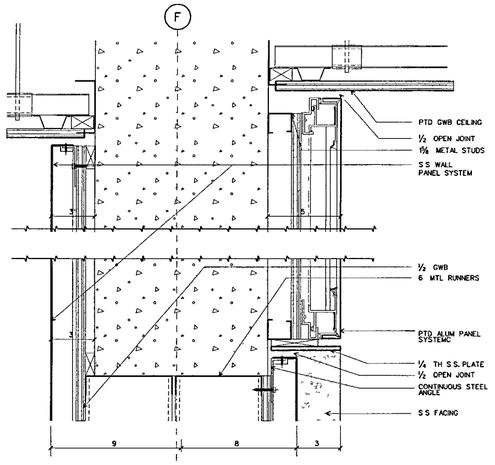

DETAIL S.S. AT ALUM. METAL PANEL (43)
SCALE 3 " = 1'-0" detail/interior glazing-01

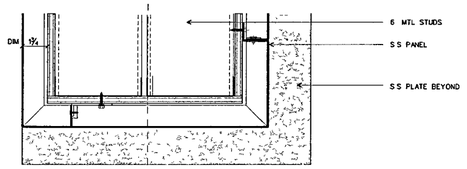

DETAIL OPENING AT CORE BUILDING (33)
SCALE 3 " = 1'-0" detail/interior glazing-01

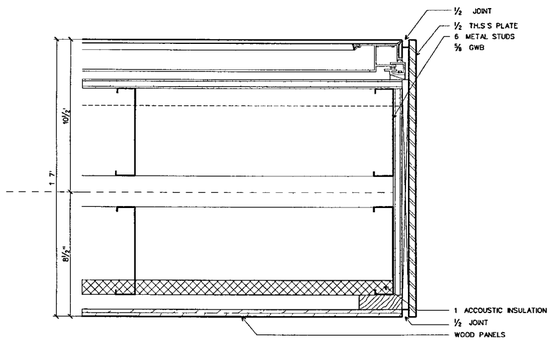

DETAIL AT END OF WOOD WALL (42)
SCALE 3 " = 1-0 detail/interior glazing-01

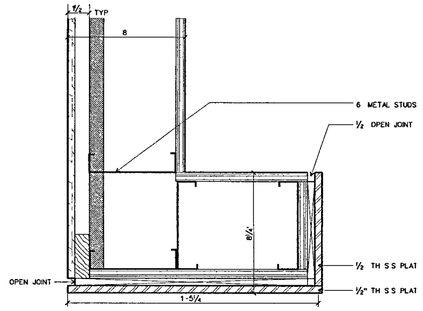

DETAIL AT CURTAIN NICHE (41)
SCALE 3 " = 1-0" interior detail/d-metal panel dgn

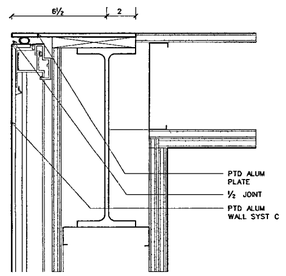

DETAIL TOP OF WALL AT STAIR 2 (40)
SCALE 3 " = 1-0 interior detail/d-metal panel dgn

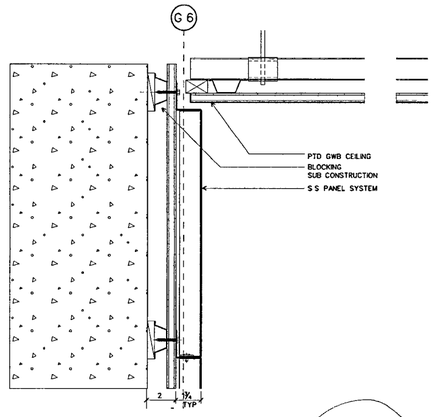

DETAIL S S. PANEL AT CEILING (31)
SCALE 3 " = 1'-0" interior detail/d-metal panel dgn

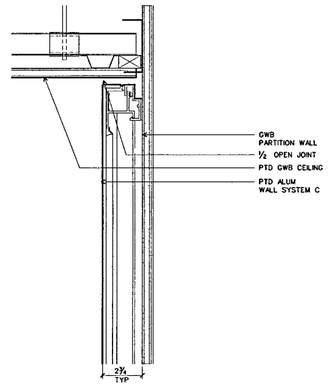

DETAIL AT HEAD OF PTD. ALUM. PANEL (30)
SCALE 3 " = 1-0" interior detail/d-metal panel dgn

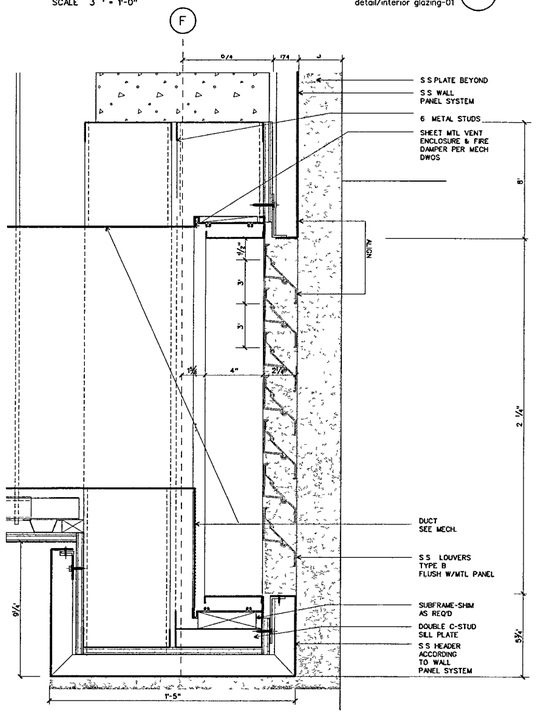

DETAIL AT LOUVERS / S S. PANEL SYSTEM (13)
SCALE 3 " = 1-0 interior detail/d-metal panel dgn

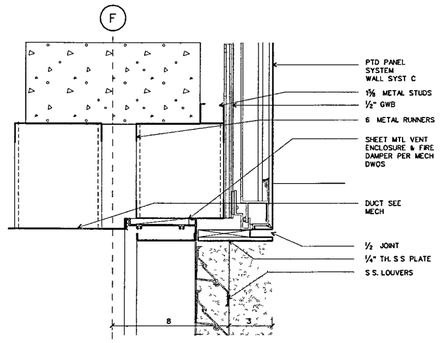

DETAIL AT LOUVERS / ALUM PANEL SYSTEM (22)
SCALE 3 " = 1'-0 detail/interior glazing-01

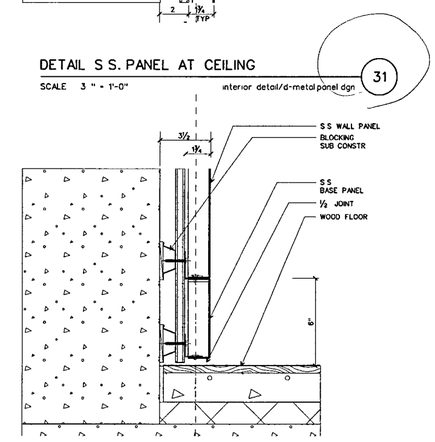

TYP DETAIL S.S. PANEL AT FLOOR (21)
SCALE 3 " = 1'-0" interior detail/d-metal panel dgn

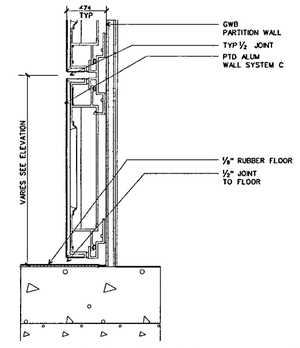

TYP. DETAIL ALUM. PANEL AT FLOOR (20)
SCALE 3 " = 1'-0" interior detail/d-metal panel dgn

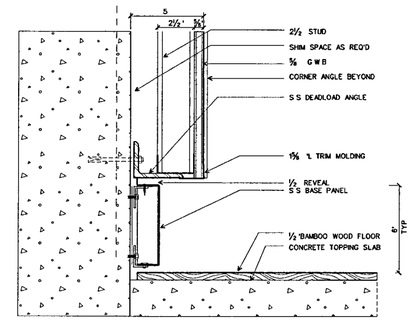

BASE DETAIL @ STR. 4 & 5, STR 6 SIM. (12)
SCALE 3 " = 1-0

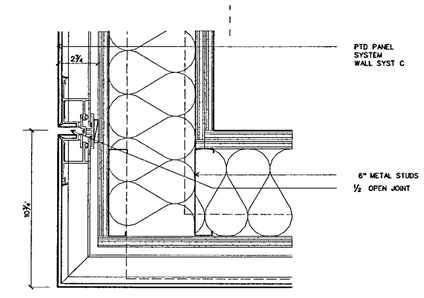

PLAN DETAIL AT METAL PANEL CORNER (11)
SCALE 3 " = 1-0

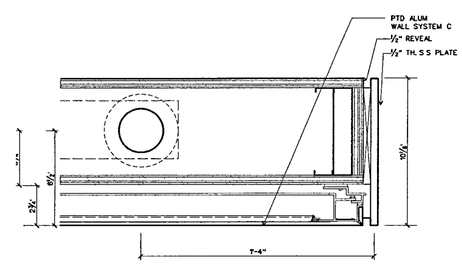

PLAN DETAIL AT END OF WALL (10)
SCALE 3 " = 1-0 interior detail/d-metal panel dgn

WILLIAM J CLINTON PRESIDENTIAL CENTER

LITTLE ROCK, ARKANSAS

Architect

POLSHEK PARTNERSHIP LLP
320 West 13th Street
New York, New York 10014
212 807 7171

Coordinating Architects

POLK STANLEY YEARY ARCHITECTS Ltd
700 South Schiller Street
Little Rock, Arkansas 72201
501 378 0878

WITSELL EVANS RASCO
901 West Third Street
Little Rock, Arkansas 72201
501 374 5300

WOODS CARADINE ARCHITECTS
2200 South Main Street
Little Rock, Arkansas 72206
501 374.4060

Landscape Architects

HARGREAVES ASSOCIATES
118 Magazine Street
Cambridge Massachusettes 02139
617 661 0070

LANDSCAPE ARCHITECTURE Inc
2300 Cottondale Lane Suite 202
Little Rock, Arkansas 72202
501 374 5610

Structural Engineer

LESLIE E. ROBERTSON ASSOC., RLLP
30 Broad Street, 47th Floor
New York, New York 10004
212 750 9000

MEP Engineers

FLACK + KURTZ Inc.
475 Fifth Avenue
New York, New York 10017
212 532 9600

CROMWELL ARCHITECTS ENGINEERS
101 South Spring Street
Little Rock, Arkansas 72201
501 372 2900

Curtainwall Consultant

R. A. HEINTGES ARCHITECTS
126 Fifth Avenue, 9th Floor
New York, New York 10011
212 652-2966

Seal

RICHARD OLCOTT REGISTERED ARCHITECT 3405 ARKANSAS

Issue	Date
100% Construction Documents	09/27/02
90% Progress Printing	08/30/02
ASI #05	08/20/02
100% Struct./ CD Progress	07/01/02
Bridge Bldg Substructure	06/14/02
100% Steel & Concrete CD & Architectural CD Progress	05/15/02
100% Design Development	03/01/02

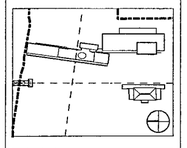

Job No 9908

Scale 3" = 1'-0"

Date September 27 2002

Title **MUSEUM BUILDING INTERIOR DETAILS METAL PANEL SYSTEMS**

Sheet No **A454**

FOR OFFICIAL USE ONLY

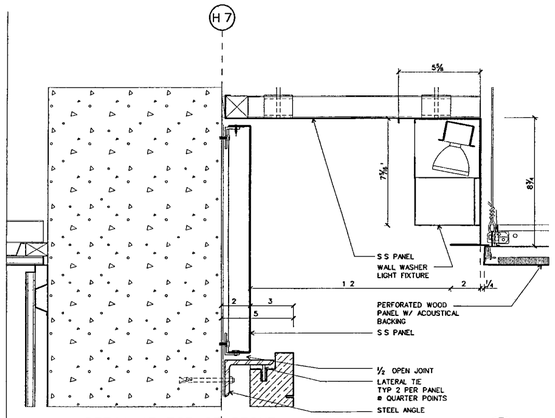

DETAIL AT TOP OF STONE (43)
SCALE 3 = 1-0 detail/interior-glazing04

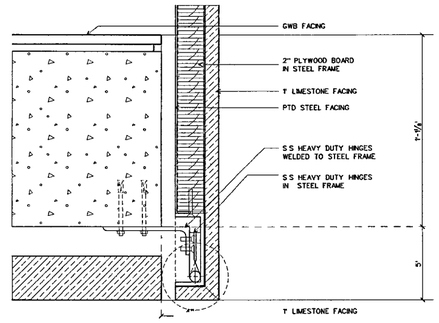

PLAN DETAIL AT DOOR HINGE PROJECTION ROOM (42)
SCALE 3 = 1-0 detail/interior-glazing04

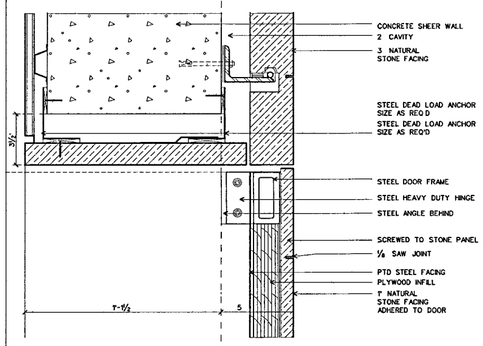

DETAIL AT DOOR HEAD PROJECTION ROOM (33)
SCALE 3 = 1'-0" detail/interior-glazing04

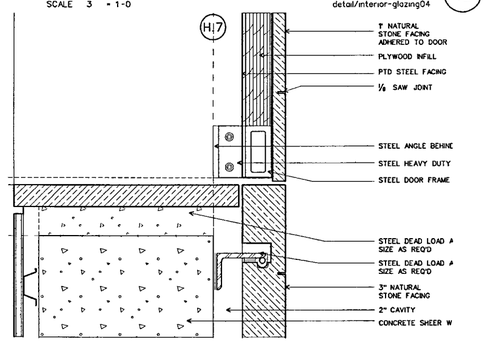

DETAIL AT CATWALK FRONT (32)
SCALE 3 = 1-0 detail/interior-glazing04

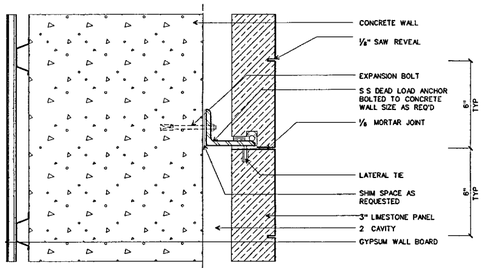

DETAIL TYP. STONE BRACKET (23)
SCALE 3 " = 1'-0" detail/interior-glazing04

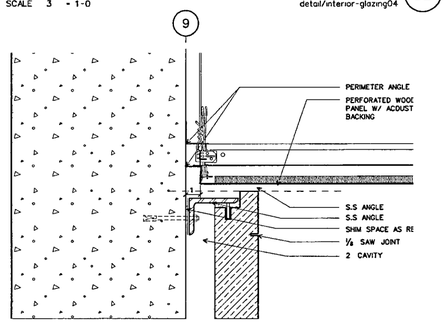

DETAIL AT CATWALK CEILING (22)
SCALE 3 ' = 1-0' detail/interior-glazing04

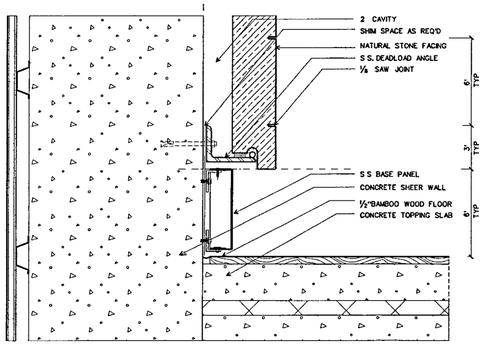

SECTION AT FLOOR (13)
SCALE 3 = 1-0 detail/interior-glazing04

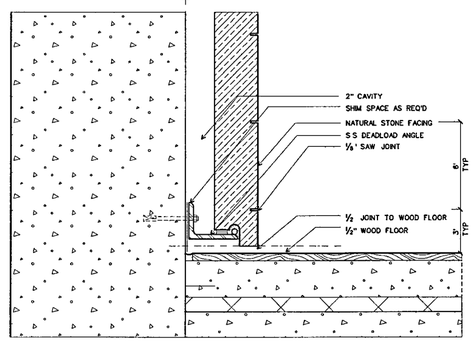

BASE AT CATWALK (12)
SCALE 3 " = 1'-0" detail/interior-glazing04

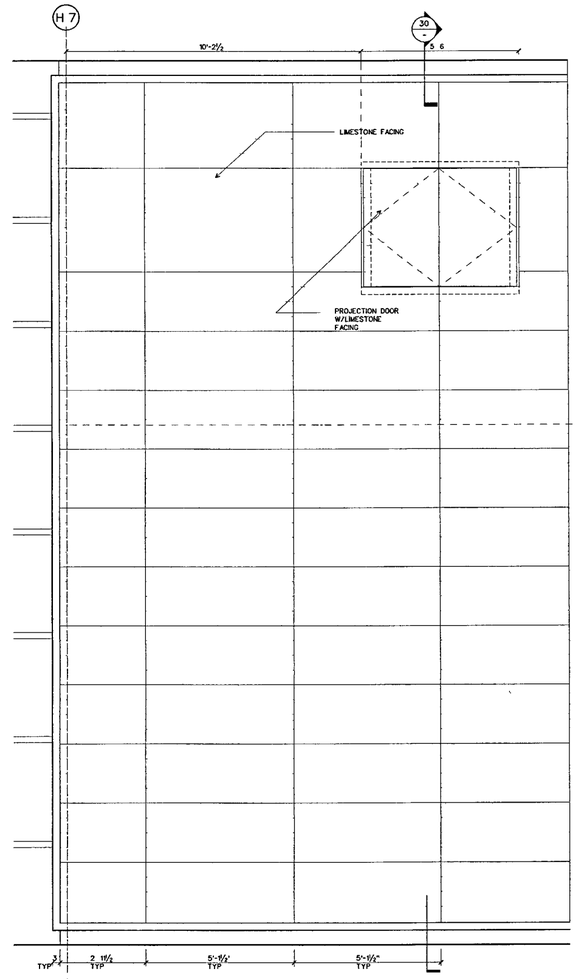

PARTIAL ELEVATION (31)
SCALE ½" = 1-0 detail/interior-glazing04

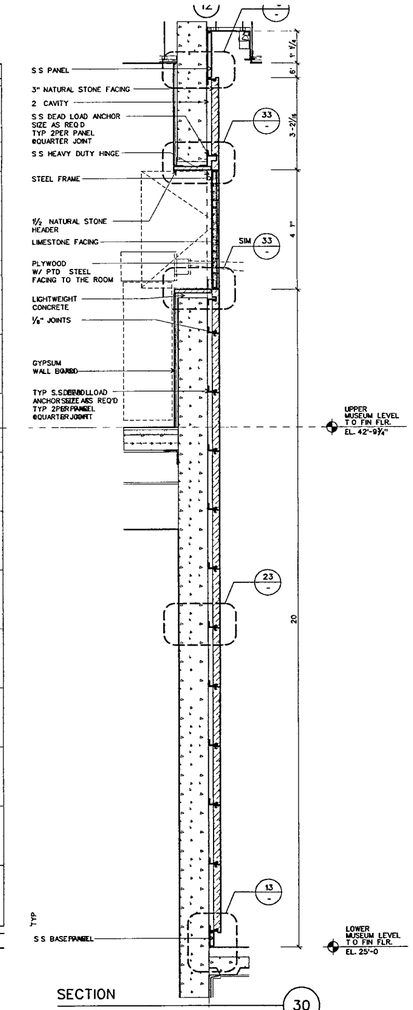

SECTION (30)
SCALE ½ = 1'-0' detail/interior-glazing04

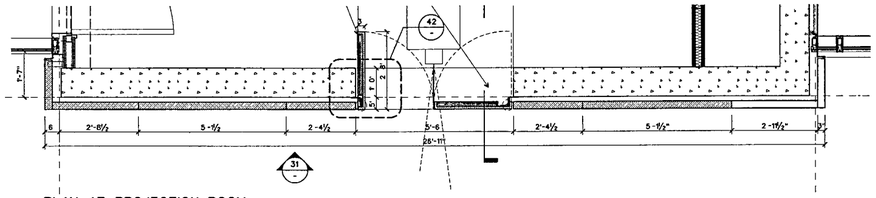

PLAN AT PROJECTION ROOM (20)
SCALE ½ = 1-0 detail/interior-glazing04

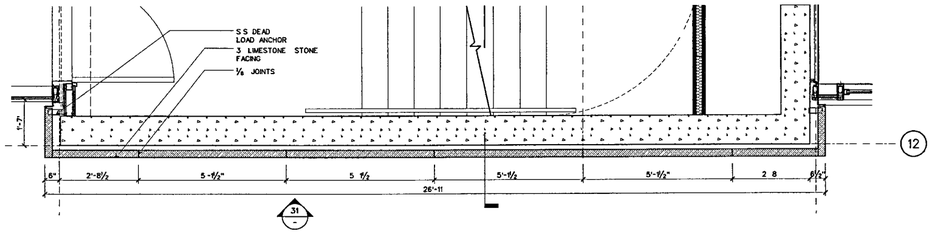

PLAN AT STAIR (10)
SCALE ½ = 1-0' detail/interior-glazing04

WILLIAM J CLINTON PRESIDENTIAL CENTER

LITTLE ROCK, ARKANSAS

Architect

POLSHEK PARTNERSHIP LLP
320 West 13th Street
New York New York 10014
212 807 7171

Coordinating Architects

POLK STANLEY YEARY ARCHITECTS Ltd
700 South Schiller Street
Little Rock Arkansas 72201
501 378.0878

WITSELL EVANS RASCO
901 West Third Street
Little Rock, Arkansas 72201
501 374 5300

WOODS CARADINE ARCHITECTS
2200 South Main Street
Little Rock, Arkansas 72206
501 374 4060

Landscape Architects

HARGREAVES ASSOCIATES
116 Magazine Street
Cambridge Massachusettes 02139
617 661 0070

LANDSCAPE ARCHITECTURE, Inc.
2300 Cottondale Lane Suite 202
Little Rock, Arkansas 72202
501 374 5610

Structural Engineer

LESLIE E ROBERTSON ASSOC , RLLP
30 Broad Street, 47th Floor
New York New York 10004
212 750 9000

MEP Engineers

FLACK + KURTZ Inc.
475 Fifth Avenue
New York, New York 10017
212.532.9600

CROMWELL ARCHITECTS ENGINEERS
101 South Spring Street
Little Rock, Arkansas 72201
501 372 2900

Curtainwall Consultant

R. A. HEINTGES ARCHITECTS
126 Fifth Avenue, 9th Floor
New York, New York 10011
212.652-2966

Seal

Issue	Date
100% Construction Documents	09/27/02
90% Progress Printing	08/30/02
100% Struct./ CD Progress	07/01/02

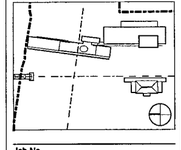

Job No 9908

Scale 1'-1/2" / 3" = 1'-0"

Date September 27, 2002

Title MUSEUM BUILDING INTERIOR DETAILS STONE

Sheet No A455

FOR OFFICIAL USE ONLY

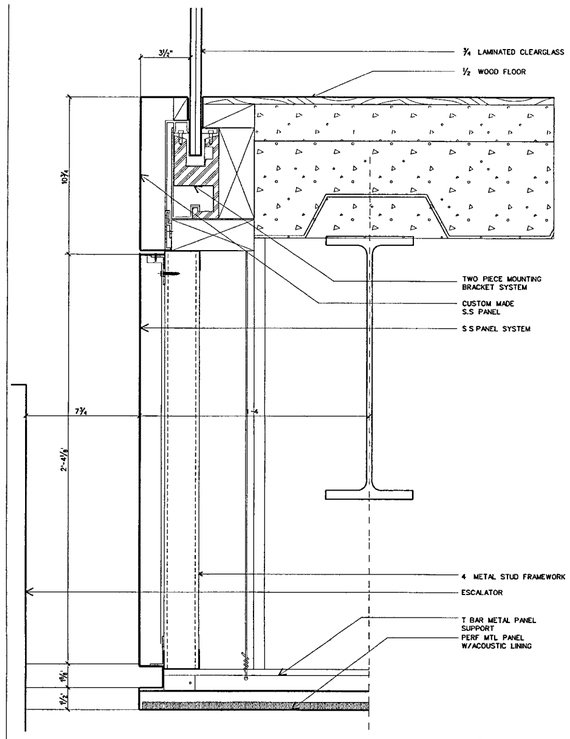

DETAIL AT ESCALATOR UPPER LEVEL (33)
SCALE 3" = 1-0" interior detail/d-metal panel 01 dgn

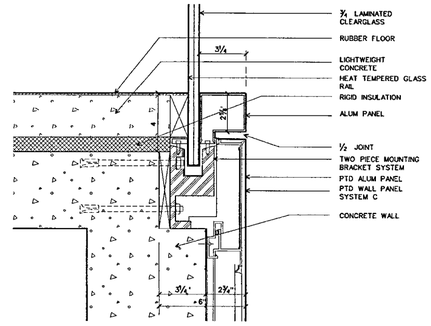

DETAIL AT ESCALATOR LOWER LEVEL (42)
SCALE 3 = 1-0 interior detail/d-metal panel 01 dgn

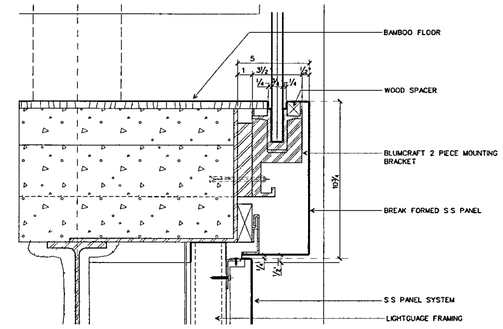

DETAIL AT CATWALK (41)
SCALE 3 = 1-0" interior detail/d-metal panel 01 dgn

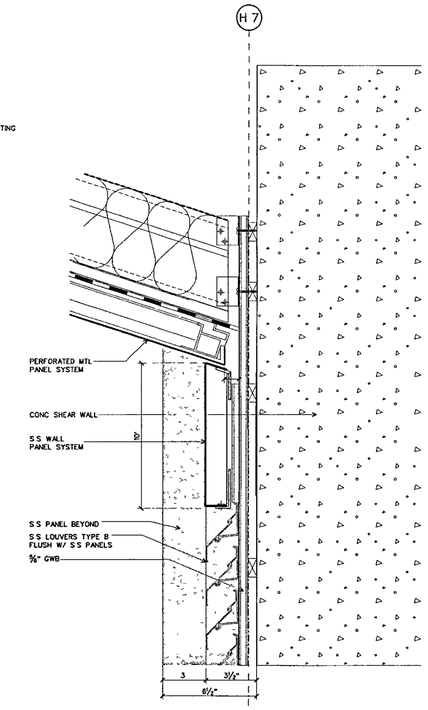

DETAIL S.S. METAL PANEL AT CEILING (30)
SCALE 3" = 1-0" interior detail/d-metal panel 01 dgn

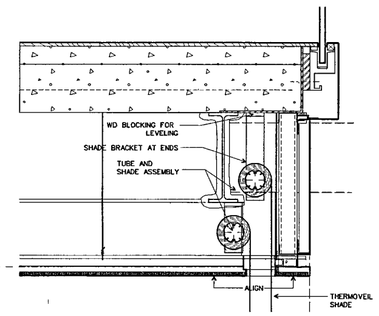

DETAIL AT CATWALK SHADES (31)
SCALE 3 = 1-0" interior detail/d-metal panel 01 dgn

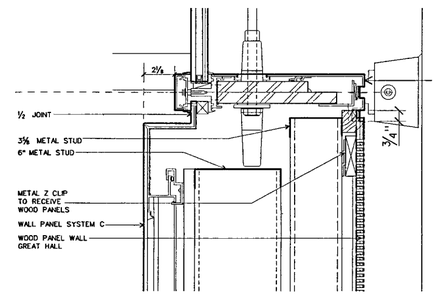

DETAIL AT WOOD WALL GREAT HALL (31)
SCALE 3 = 1-0 interior detail/d-metal panel 01 dgn

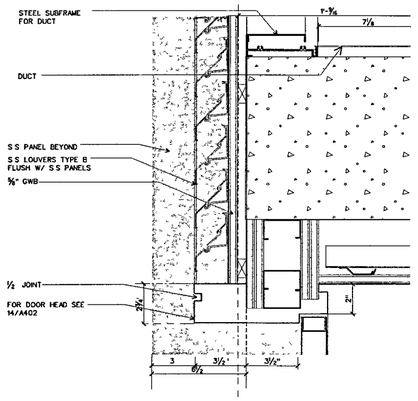

DETAIL LOUVERS AT DOOR HEAD (20)
SCALE 3" = 1'-0" interior detail/d-metal panel 01 dgn

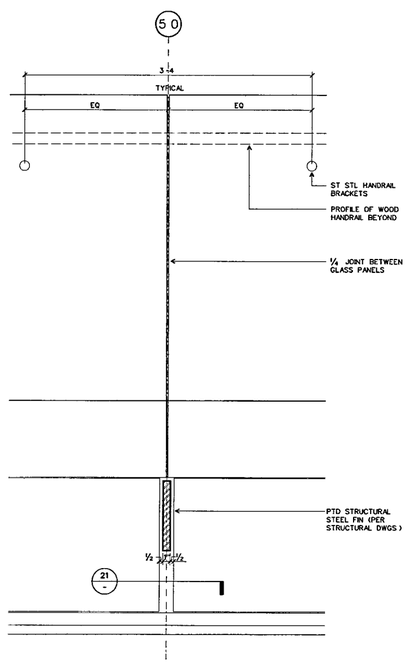

DETAIL CATWALK AT STRUCTURAL FIN (13)
SCALE 3" = 1'-0 interior detail/d-metal panel 01 dgn

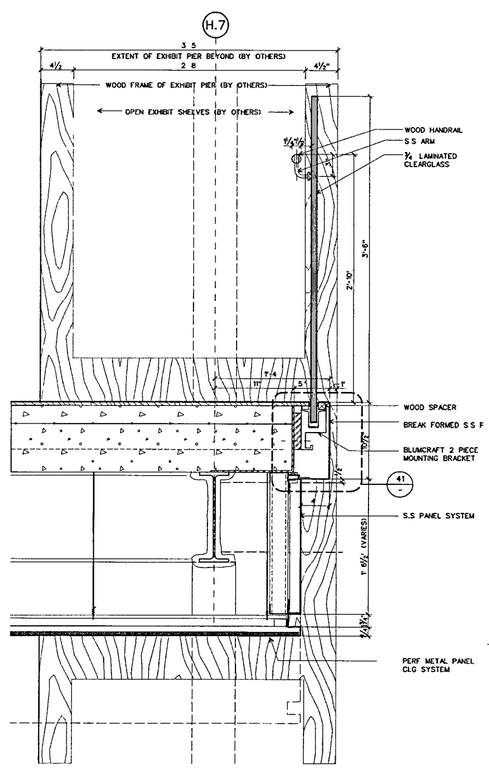

DETAIL AT CATWALK (12)
SCALE 3" = 1'-0" interior detail/d-metal panel 01 dgn

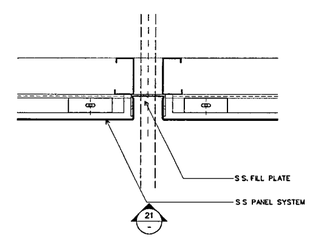

DETAIL CATWALK AT STRUCTURAL FIN (21)
SCALE 3" = 1'-0" interior detail/d-metal panel 01 dgn

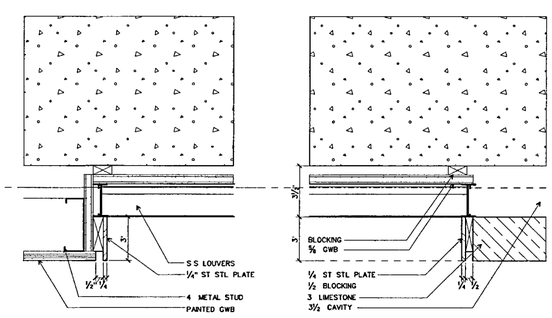

PLAN DETAIL AT STAIR 4 (11)
SCALE 3" = 1-0 interior detail/d-metal panel 01 dgn

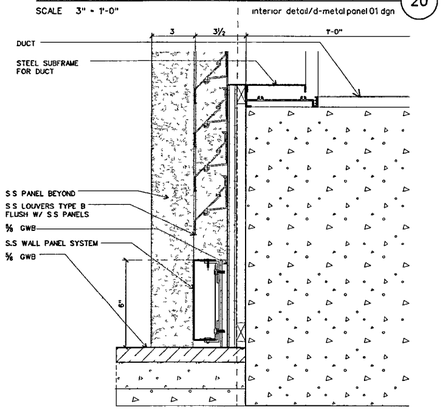

DETAIL AT STAIR 4, BASE AT LOUVERS (10)
SCALE 3 = 1'-0 interior detail/d-metal panel 01 dgn

WILLIAM J CLINTON PRESIDENTIAL CENTER

LITTLE ROCK, ARKANSAS

Architect
POLSHEK PARTNERSHIP LLP
320 West 13th Street
New York, New York 10014
212 807 7171

Coordinating Architects
POLK STANLEY YEARY ARCHITECTS Ltd
700 South Schiller Street
Little Rock, Arkansas 72201
501 376 0878

WITSELL EVANS RASCO
901 West Third Street
Little Rock, Arkansas 72201
501 374 5300

WOODS CARADINE ARCHITECTS
2200 South Main Street
Little Rock, Arkansas 72206
501 374 4060

Landscape Architects
HARGREAVES ASSOCIATES
118 Magazine Street
Cambridge Massachusettes 02139
617 661 0070

LANDSCAPE ARCHITECTURE Inc.
2300 Cottondale Lane Suite 202
Little Rock Arkansas 72202
501 374 5810

Structural Engineer
LESLIE E ROBERTSON ASSOC RLLP
30 Broad Street, 47th Floor
New York, New York 10004
212 750 9000

MEP Engineers
FLACK + KURTZ Inc
475 Fifth Avenue
New York, New York 10017
212.532 9600

CROMWELL ARCHITECTS ENGINEERS
101 South Spring Street
Little Rock Arkansas 72201
501 372 2900

Curtainwall Consultant
R. A. HEINTGES ARCHITECTS
126 Fifth Avenue, 9th Floor
New York, New York 10011
212.652-2966

Seal

Issue	Date
100% Construction Documents	09/27/02
100% Struct./ CD Progress	07/01/02

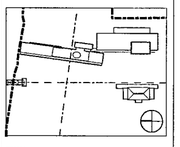

Job No 9908

Scale 3" = 1'-0"

Date September 27, 2002

Title **MUSEUM BUILDING INTERIOR DETAILS METAL PANEL SYSTEMS**

Sheet No **A457**

FOR OFFICIAL USE ONLY

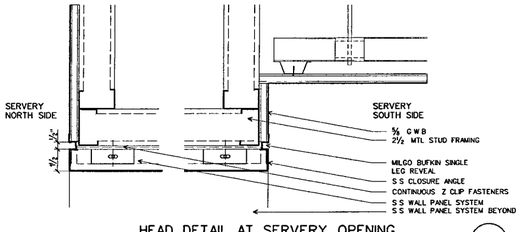

HEAD DETAIL AT SERVERY OPENING (43)
SCALE 3" = 1'-0" details/dtl-wd-02 dgn

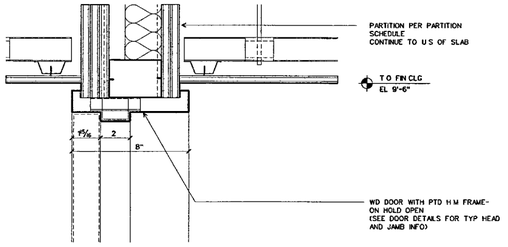

HEAD DETAIL AT HOLD OPEN DOOR (42)
SCALE 3" = 1'-0 details/dtl-wd-02 dgn

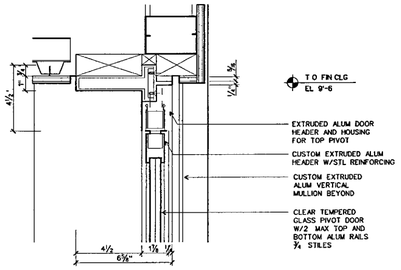

HEAD DETAIL AT GLASS DOOR (41)
SCALE 3" = 1'-0 details/dtl-wd-02 dgn

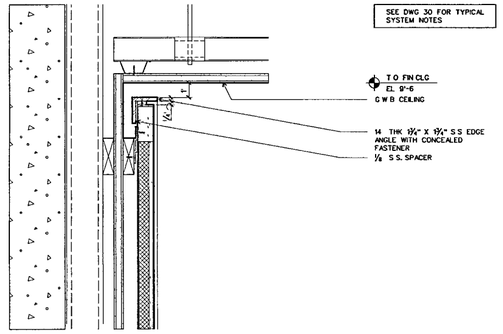

CEILING DETAIL AT WOOD PANEL (40)
SCALE 3" = 1'-0 details/dtl-wd-02 dgn

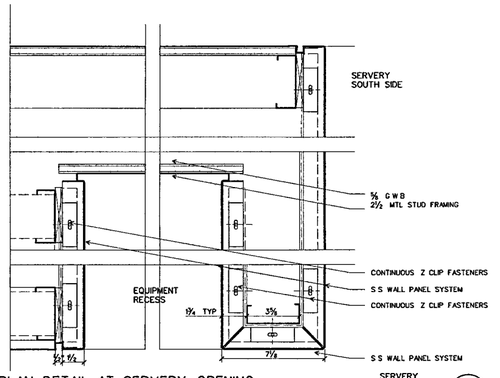

PLAN DETAIL AT SERVERY OPENING (33)
SCALE 3" = 1'-0 details/dtl-wd-02 dgn

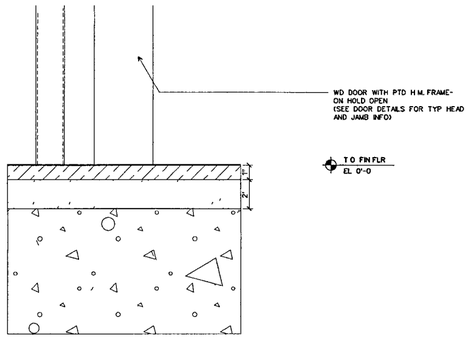

SILL DETAIL AT HOLD OPEN DOOR (32)
SCALE 3" = 1'-0 details/dtl-wd-02 dgn

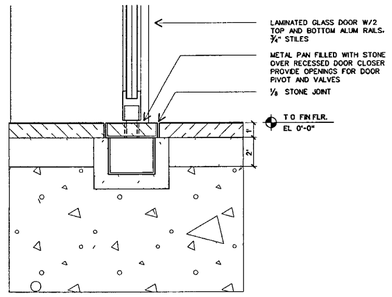

SILL DETAIL AT GLASS DOOR (31)
SCALE 3" = 1'-0 details/dtl-wd-02 dgn

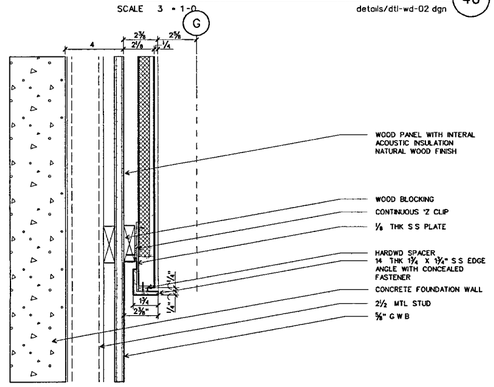

TYP BOTTOM EDGE DETAIL AT WOOD PANEL (30)
SCALE 3" = 1'-0" details/dtl-wd-02 dgn

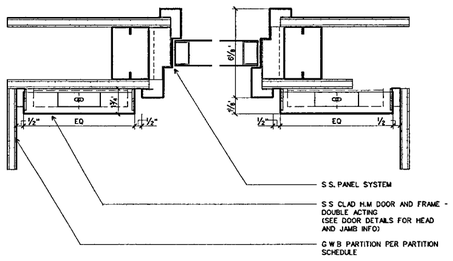

JAMB DETAIL AT KITCHEN DOOR (23)
SCALE 3" = 1'-0" details/dtl-wd-02 dgn

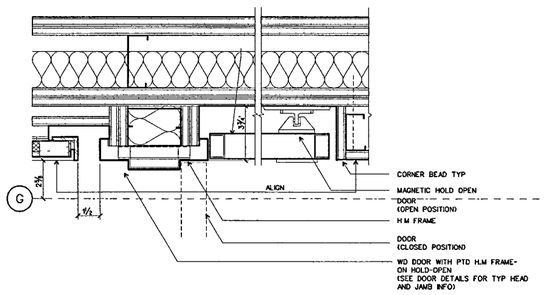

JAMB DETAIL AT HOLD OPEN DOOR (22)
SCALE 3" = 1'-0" details/dtl-wd-02 dgn

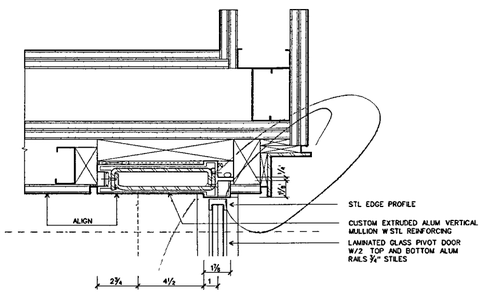

JAMB DETAIL AT GLASS DOOR (21)
SCALE 3" = 1'-0 details/dtl-wd-02 dgn

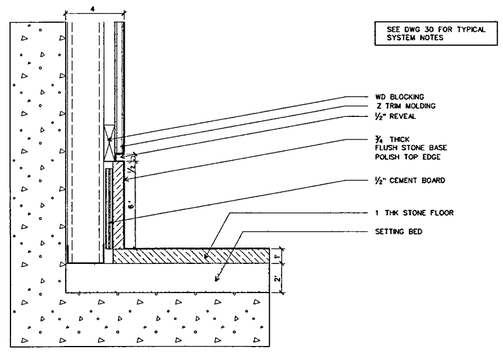

BASE DETAIL AT WOOD PANEL (20)
SCALE 3" = 1'-0 details/dtl-wd-02 dgn

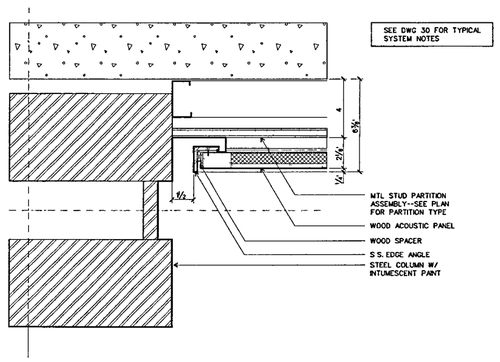

END CONDITION AT COLUMN (13)
SCALE 3" = 1'-0 details/dtl-wd-02 dgn

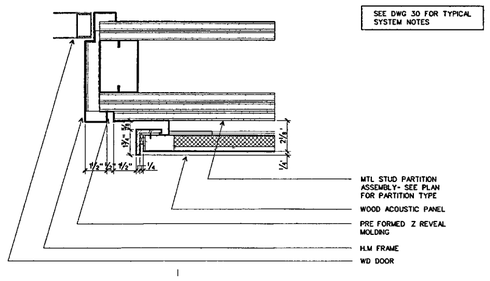

TYP. END CONDITION AT DOOR JAMB (HEAD SIM) (12)
SCALE 3" = 1'-0" details/dtl-wd-02 dgn

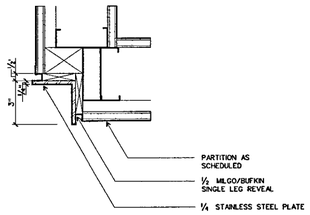

TYP. CORNER CONDITION (11)
details/dtl-wd-02 dgn

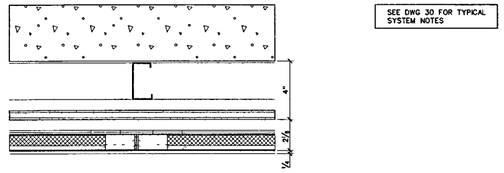

TYP. VERTICAL JOINT AT WOOD PANEL (10)
SCALE 3" = 1'-0 details/dtl-wd-02 dgn

WILLIAM J CLINTON PRESIDENTIAL CENTER

LITTLE ROCK, ARKANSAS

Architect
POLSHEK PARTNERSHIP LLP
320 West 13th Street
New York New York 10014
212 807 7171

Coordinating Architects
POLK STANLEY YEARY ARCHITECTS Ltd
700 South Schiller Street
Little Rock, Arkansas 72201
501 378 0878

WITSELL EVANS RASCO
901 West Third Street
Little Rock, Arkansas 72201
501 374 5300

WOODS CARADINE ARCHITECTS
2200 South Main Street
Little Rock Arkansas 72206
501 374 4060

Landscape Architects
HARGREAVES ASSOCIATES
118 Magazine Street
Cambridge, Massachusettes 02139
617 661 0070

LANDSCAPE ARCHITECTURE, Inc
2300 Cottondale Lane Suite 202
Little Rock, Arkansas 72202
501 374 5610

Structural Engineer
LESLIE E ROBERTSON ASSOC RLLP
30 Broad Street, 47th Floor
New York New York 10004
212.750 9000

MEP Engineers
FLACK + KURTZ Inc.
475 Fifth Avenue
New York, New York 10017
212 532.9600

CROMWELL ARCHITECTS ENGINEERS
101 South Spring Street
Little Rock, Arkansas 72201
501 372 2900

Curtainwall Consultant
R. A. HEINTGES ARCHITECTS
126 Fifth Avenue 9th Floor
New York, New York 10011
212.652-2966

Seal

RICHARD OLCOTT REGISTERED ARCHITECT 2405 ARKANSAS

Issue	Date
100% Construction Documents	09/27/02
100% Struct./ CD Progress	07/01/02

Job No 9908

Scale

Date September 27, 2002

Title
MUSEUM BUILDING WOOD PANEL SYSTEM DETAILS

Sheet No
A458

FOR OFFICIAL USE ONLY

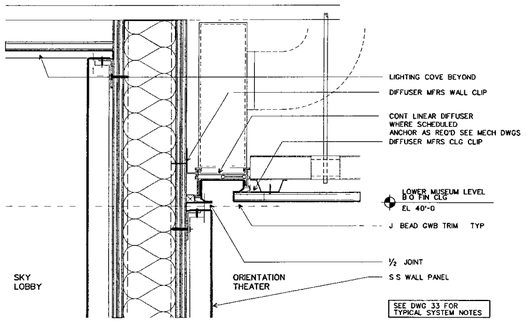

CEILING DETAIL AT S S PANEL AT ORIENTATION THEATER ENTRY

SCALE 3 = 1-0 details/dtl-wd-03 (43)

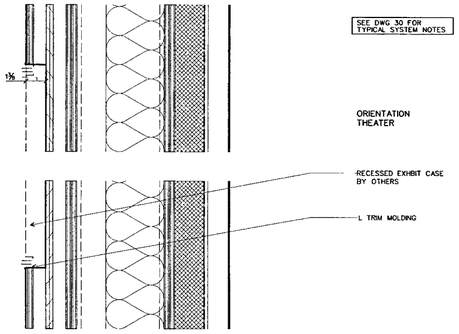

EXHIBIT DETAIL

SCALE 3 = 1-0 details/dtl-wd-03 (42)

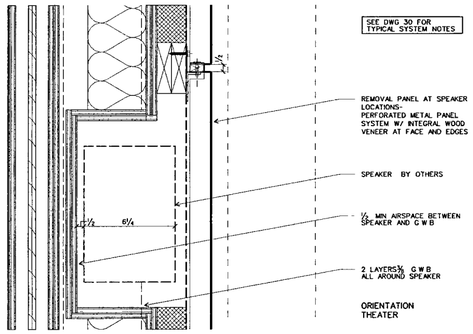

WOOD PANEL DETAIL AT WALL SPEAKER

SCALE 3 = 1-0 details/dtl-wd-03 (41)

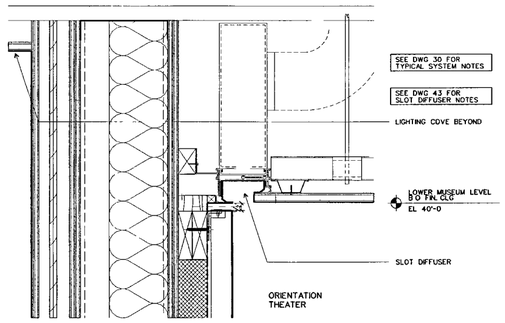

WOOD PANEL CEILING DETAIL AT ORIENTATION THEATER

SCALE 3 = 1-0 details/dtl-wd-03 (40)

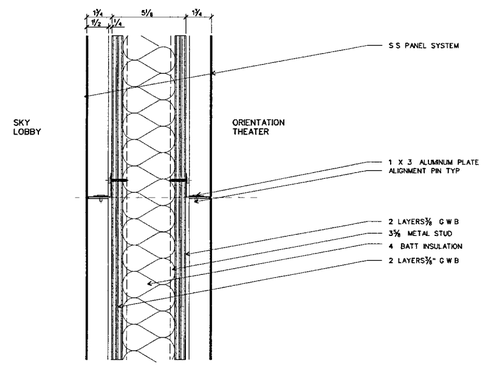

HORIZ. JOINT AT S S. PANEL AT ORIENTATION THEATER ENTRY

SCALE 3 = 1-0' details/dtl-wd-03 (33)

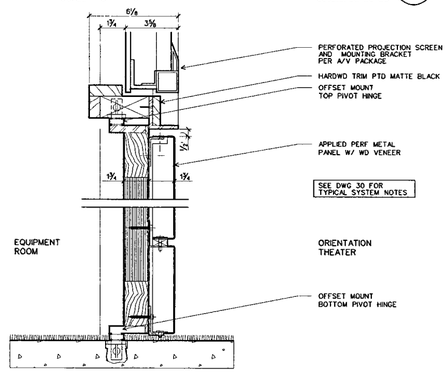

ACCESS PANEL DOOR HEAD & SILL AT ORIENTATION THEATER

SCALE 3 = 1-0 details/dtl-wd-03 (22B)

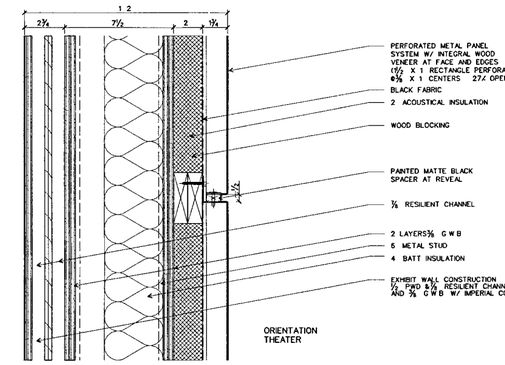

PANEL HORIZ JOINT AT ORIENTATION THEATER

SCALE 3 = 1-0 details/dtl-wd-03 (30)

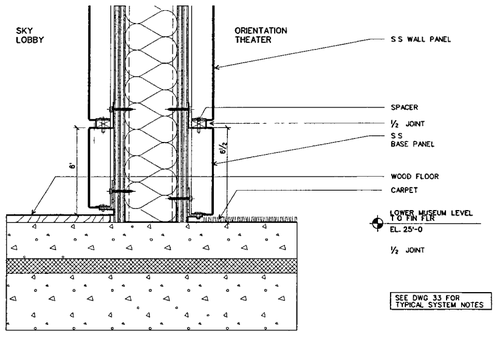

BASE DETAIL AT S.S PANEL AT ORIENTATION THEATER ENTRY

SCALE 3 = 1-0 details/dtl-wd-03 (23)

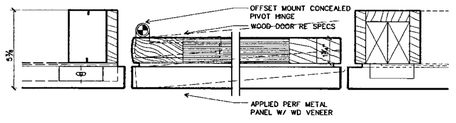

ACCESS PANEL DOOR JAMB AT ORIENTATION THEATER

SCALE 3 = 1-0 details/dtl-wd-03 (22A)

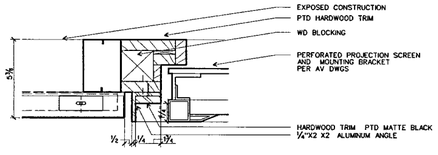

PROJECTION SCREEN FRAME

SCALE 3 = 1-0" details/dtl-wd-03 (22)

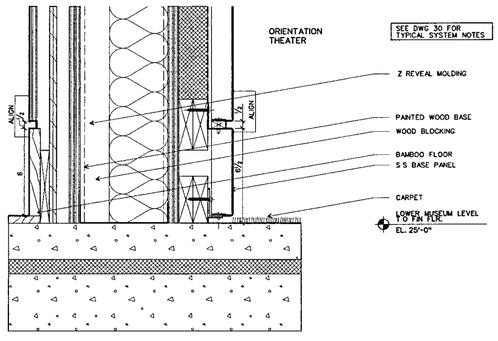

WOOD PANEL DETAIL AT ORIENTATION THEATER/EQUIPMENT ROOM

SCALE 3 = 1-0 details/dtl-wd-03 (21)

WOOD PANEL BASE DETAIL AT ORIENTATION THEATER

SCALE 3 = 1-0 details/dtl-wd-03 (20)

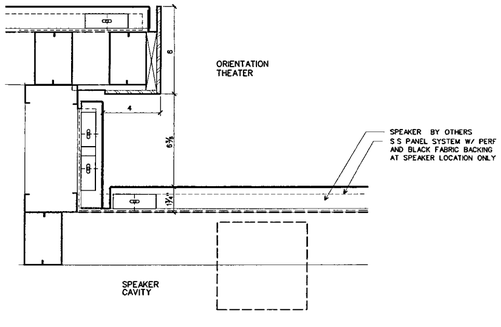

PLAN DETAIL AT ORIENTATION THEATER

SCALE 3 = 1-0' details/dtl-wd-02 dgn (33)

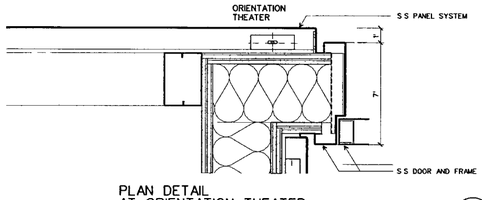

PLAN DETAIL AT ORIENTATION THEATER

SCALE 3 = 1-0 details/dtl-wd-03 (12)

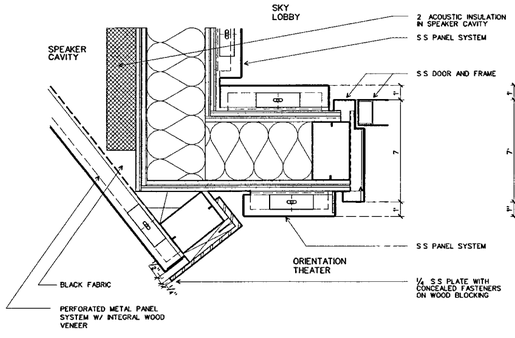

PLAN DETAIL AT ORIENTATION THEATER

SCALE 3 = 1-0 details/dtl-wd-03 (11)

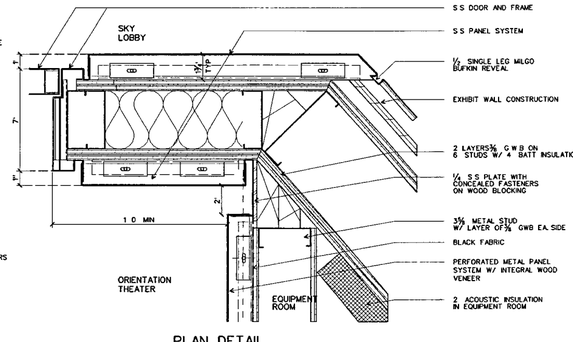

PLAN DETAIL AT ORIENTATION THEATER

SCALE 3 = 1-0 details/dtl-wd-03 (10)

WILLIAM J CLINTON PRESIDENTIAL CENTER

LITTLE ROCK, ARKANSAS

Architect

POLSHEK PARTNERSHIP LLP
320 West 13th Street
New York, New York 10014
212 807 7171

Coordinating Architects

POLK STANLEY YEARY ARCHITECTS Ltd
700 South Schiller Street
Little Rock, Arkansas 72201
501 378 0878

WITSELL EVANS RASCO
901 West Third Street
Little Rock, Arkansas 72201
501 374 5300

WOODS CARADINE ARCHITECTS
2200 South Main Street
Little Rock Arkansas 72206
501 374 4060

Landscape Architects

HARGREAVES ASSOCIATES
118 Magazine Street
Cambridge Massachusettes 02139
617 661 0070

LANDSCAPE ARCHITECTURE Inc
2300 Cottondale Lane Suite 202
Little Rock, Arkansas 72202
501 374 5810

Structural Engineer

LESLIE E. ROBERTSON ASSOC RLLP
30 Broad Street, 47th Floor
New York New York 10004
212 750 9000

MEP Engineers

FLACK + KURTZ Inc
475 Fifth Avenue
New York New York 10017
212 532 9600

CROMWELL ARCHITECTS ENGINEERS
101 South Spring Street
Little Rock, Arkansas 72201
501 372.2900

Curtainwall Consultant

R A. HEINTGES ARCHITECTS
126 Fifth Avenue 9th Floor
New York, New York 10011
212 652-2966

Seal

Issue	Date
100% Construction Documents	09/27/02
100% Struct./ CD Progress	07/01/02

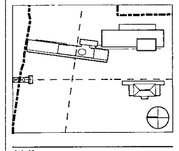

Job No 9908

Scale

Date September 27, 2002

Title MUSEUM BUILDING WOOD PANEL SYSTEM DETAILS

Sheet No A459

FOR OFFICIAL USE ONLY

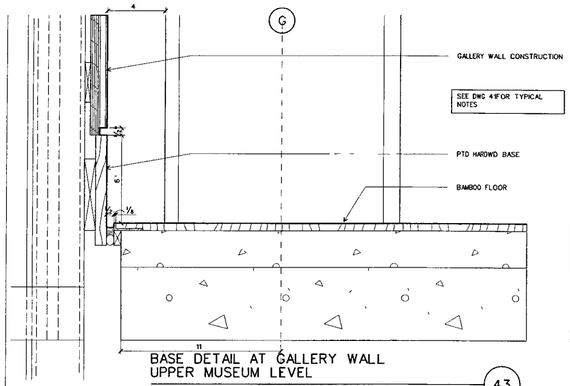

BASE DETAIL AT GALLERY WALL
UPPER MUSEUM LEVEL
SCALE 3 -1-0 details/dtl-wd 01 43

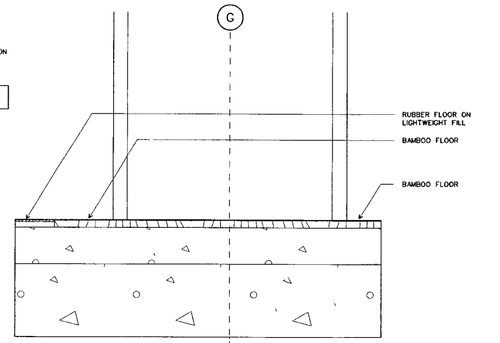

FLOOR DETAIL AT UPPER MUSEUM LEVEL
CORE LOBBY
SCALE 3 -1-0 details/dtl-wd 01 42

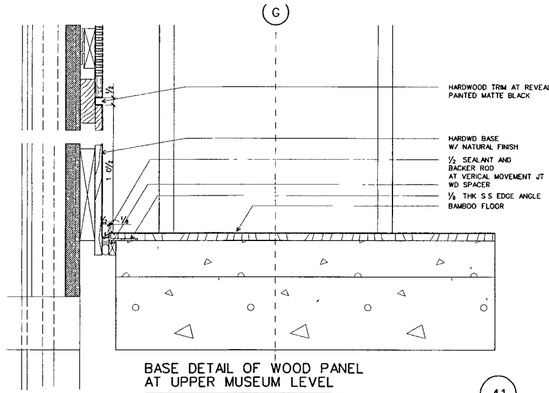

BASE DETAIL OF WOOD PANEL
AT UPPER MUSEUM LEVEL
SCALE 3 -1-0 details/dtl-wd-01 41

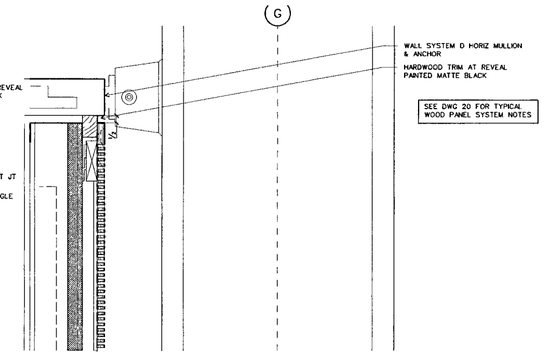

SECTION DETAIL OF WOOD PANEL AT
HORIZONTAL MULLION
SCALE 3 -1-0 details/dtl-wd-01 40

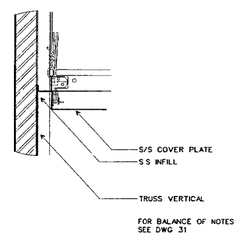

LOWER MUSEUM LEVEL
CEILING DETAIL AT TRUSS
SCALE 3 -1-0 details/dtl-wd-01 33

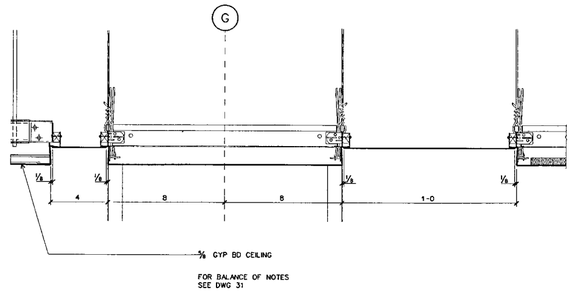

LOWER MUSEUM LEVEL CEILING DETAIL
AT CORE LOBBY
SCALE 3 -1-0' details/dtl-wd-01 32

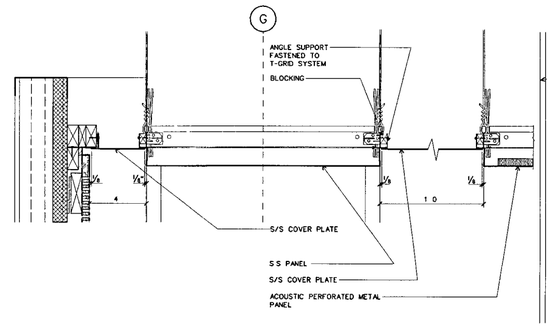

LOWER MUSEUM LEVEL CEILING DETAIL
AT WOOD PANEL
SCALE 3 -1'-0' details/dtl-wd-01 31

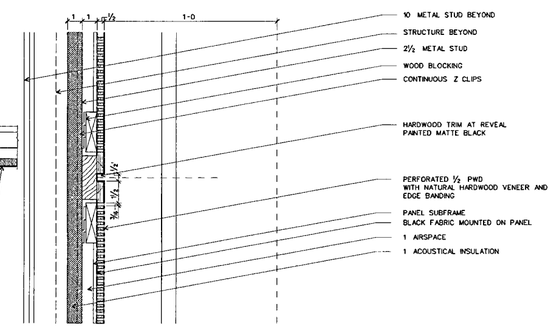

TYP HORIZ JOINT AT WOOD PANEL
(VERTICAL SIMILAR)
SCALE 3 -1-0 details/dtl-wd-01 30

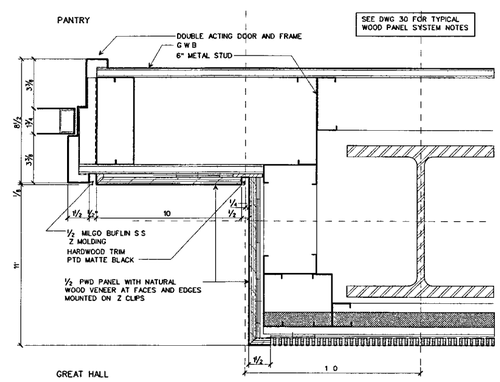

PLAN DETAIL AT PANTRY DOOR
SCALE 3 -1-0 details/dtl-wd-01 21

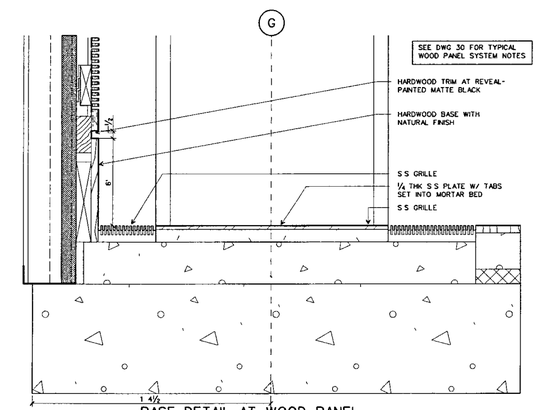

BASE DETAIL AT WOOD PANEL
LOWER MUSEUM LEVEL
SCALE 3 -1-0 details/dtl-wd-01 20

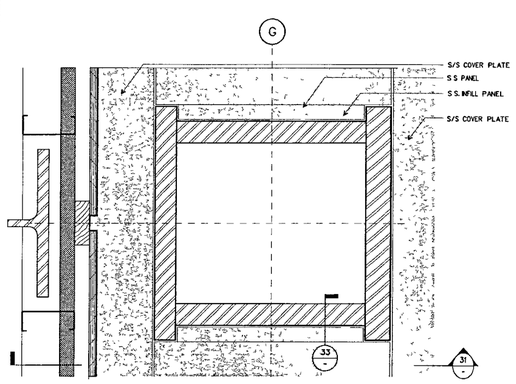

ENLARGED REFELECTED CEILING
PLAN AT TRUSS
SCALE 3 -1-0 details/dtl-wd-01 13

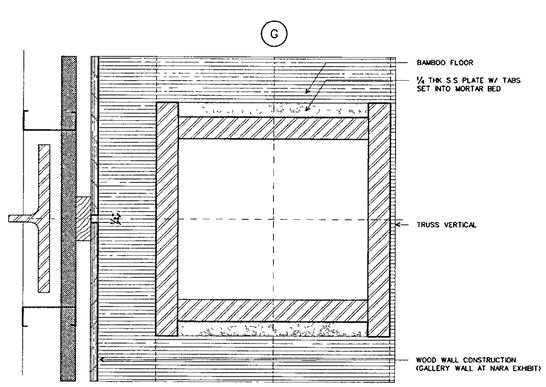

BASE DETAIL AT WOOD PANEL/
TRUSS VERTICAL
SCALE 3 -1-0 details/dtl-wd-01 12

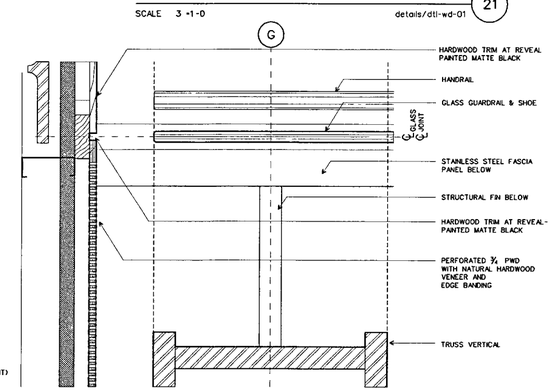

VERTICAL JOINT AT
UPPER MUSEUM LEVEL BASE
SCALE 3 -1-0 details/dtl-wd-01 11

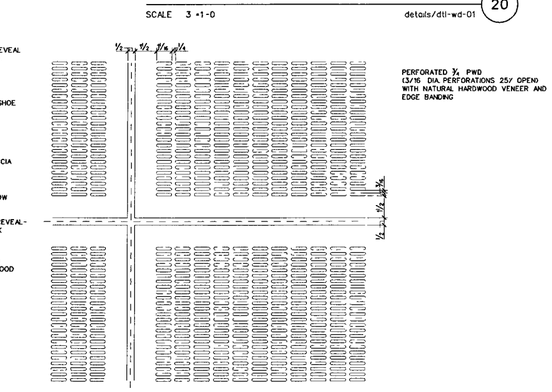

ELEV OF PERF. PATTERN AT WALL
WOOD PANEL
SCALE 3 -1-0 details/dtl-wd-01 10

WILLIAM J CLINTON PRESIDENTIAL CENTER

LITTLE ROCK, ARKANSAS

Architect

POLSHEK PARTNERSHIP LLP
320 West 13th Street
New York, New York 10014
212 807 7171

Coordinating Architects

POLK STANLEY YEARY ARCHITECTS Ltd
700 South Schiller Street
Little Rock Arkansas 72201
501 378 0678

WITSELL EVANS RASCO
901 West Third Street
Little Rock Arkansas 72201
501 374 5300

WOODS CARADINE ARCHITECTS
2200 South Main Street
Little Rock Arkansas 72206
501 374 4060

Landscape Architects

HARGREAVES ASSOCIATES
118 Magazine Street
Cambridge Massachusettes 02139
617 661 0070

LANDSCAPE ARCHITECTURE Inc
2300 Cottondale Lane Suite 202
Little Rock Arkansas 72202
501 374 5610

Structural Engineer

LESLIE E ROBERTSON ASSOC RLLP
30 Broad Street, 47th Floor
New York New York 10004
212 750 9000

MEP Engineers

FLACK + KURTZ Inc.
475 Fifth Avenue
New York New York 10017
212 532 9600

CROMWELL ARCHITECTS ENGINEERS
101 South Spring Street
Little Rock, Arkansas 72201
501 372 2900

Curtainwall Consultant

R A. HEINTGES ARCHITECTS
128 Fifth Avenue 9th Floor
New York, New York 10011
212 652-2966

Seal

Issue	Date
100% Construction Documents	09/27/02
100% Struct./ CD Progress	07/01/02

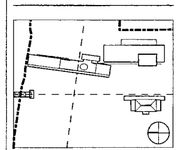

Job No 9908

Scale

Date September 27 2002

Title MUSEUM BUILDING WOOD PANEL SYSTEM DETAILS

Sheet No A460

FOR OFFICIAL USE ONLY

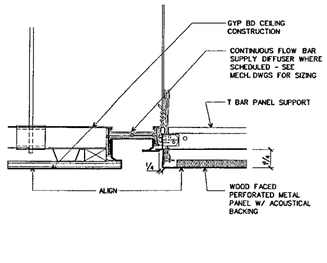

DETAIL AT METAL PANEL & GYP BD CEILING (55)
SCALE 3 " = 1'-0

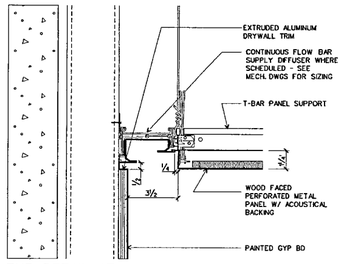

TYP. DETAIL AT METAL PANEL CEILING AT STAIR 4 & 5 (54)
SCALE 3 = 1-0

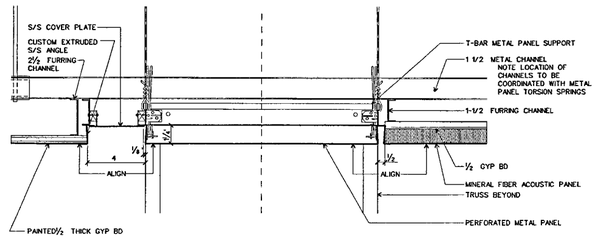

DETAIL AT TRUSS AT UPPER MUSEUM LEVEL CEILING (52)
SCALE 3 = 1-0

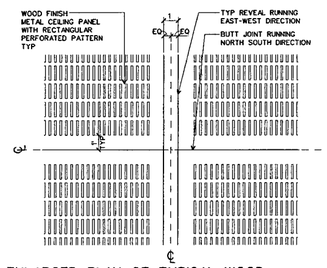

ENLARGED PLAN OF TYPICAL WOOD FINISH PERFORATED PANEL PATTERN (51)
SCALE 3 = 1-0"

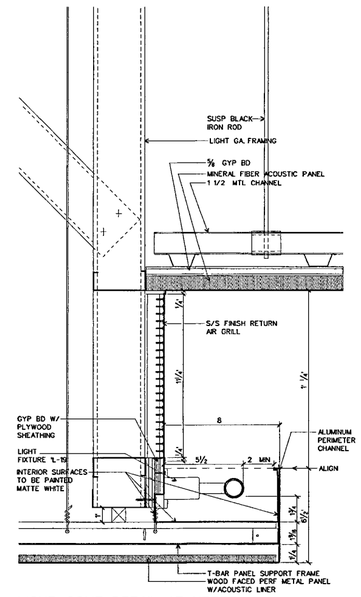

LIGHT COVE DETAIL AT UPPER MUSEUM LEVEL CEILING (40)
SCALE 3 = 1-0

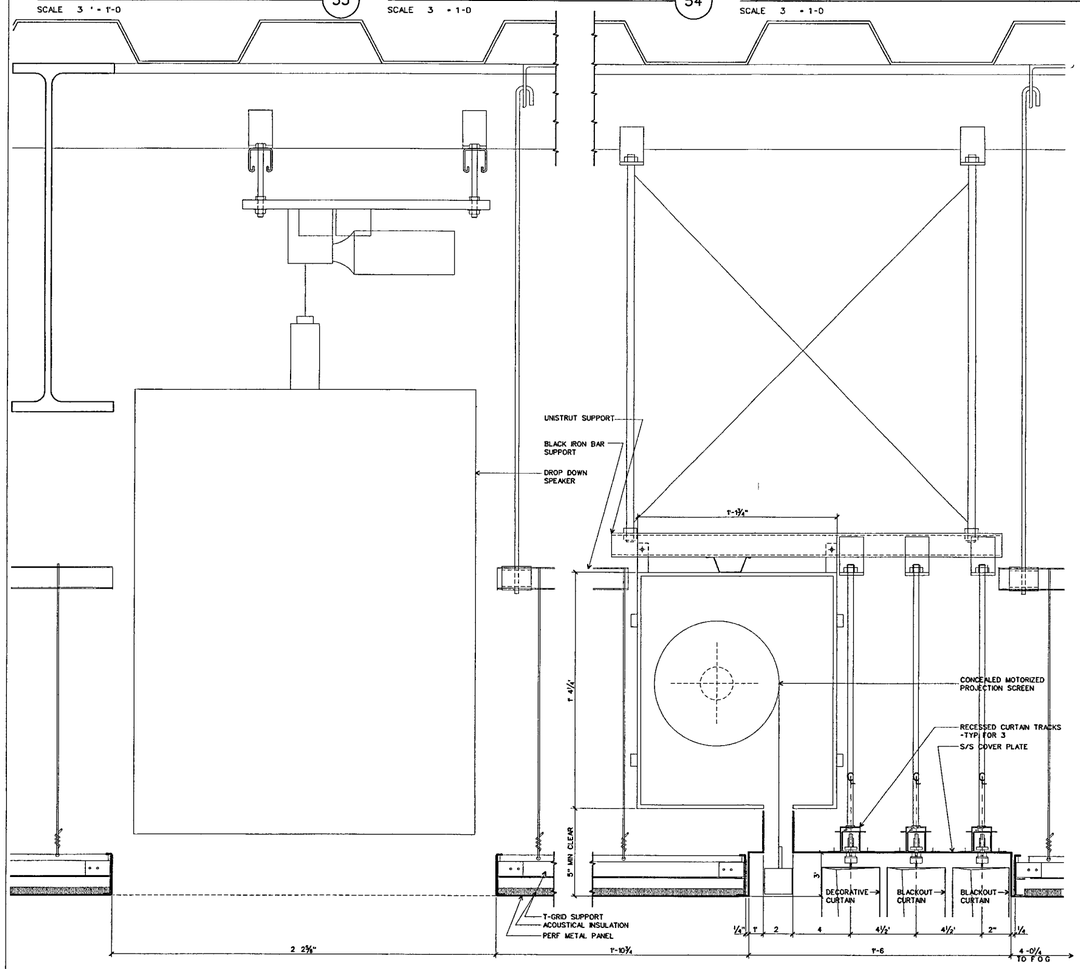

DETAIL AT GREAT HALL CEILING (23)
SCALE 3 = 1-0"

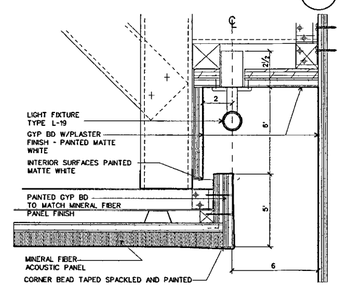

UPPER MUSEUM LEVEL LIGHT COVE DETAIL AT OVAL OFFICE (42)
SCALE 3 " = 1-0

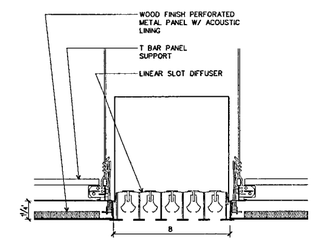

LINEAR SLOT DIFFUSER DETAIL AT UPPER MUSEUM LEVEL CEILING (41)
SCALE 3 " = 1'-0"

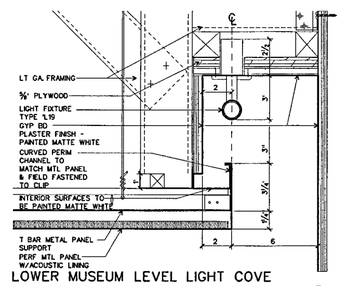

LOWER MUSEUM LEVEL LIGHT COVE DETAIL AT ORIENTATION THEATER (32)
SCALE 3 " = 1-0

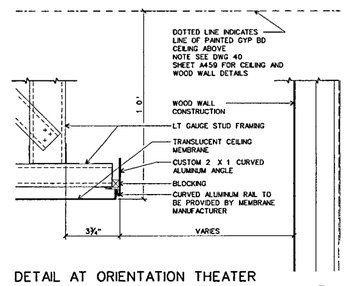

DETAIL AT ORIENTATION THEATER CEILING (31)
SCALE 3 " = 1'-0"

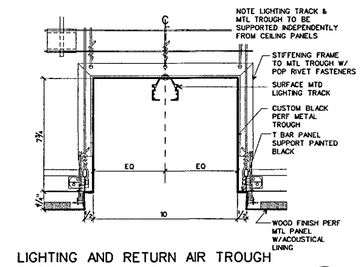

LIGHTING AND RETURN AIR TROUGH DETAIL AT UPPER MUSEUM LEVEL (30)
SCALE 3 " = 1'-0

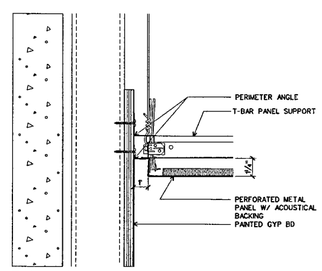

TYP. METAL PANEL DETAIL AT LOWER MUSEUM LEVEL (22)
SCALE 3 " = 1'-0"

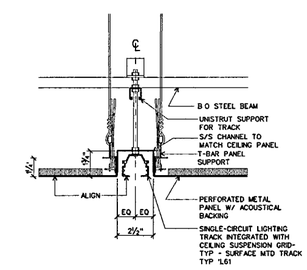

TYP CEILING DETAIL AT RECESSED TRACK LIGHTS AT LWR MUSEUM LVL (21)
SCALE 3 " = 1'-0"

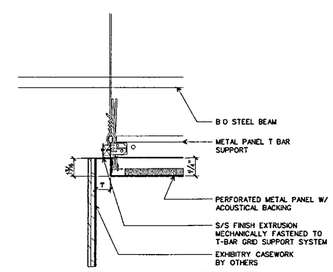

METAL PANEL CEILING DETAIL AT LOWER MUSEUM LEVEL (20)
SCALE 3 " = 1'-0"

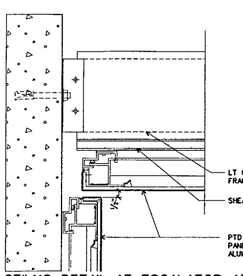

CEILNG DETAIL AT ESCALATOR AT GROUND LEVEL (15)
SCALE 3 = 1-0'

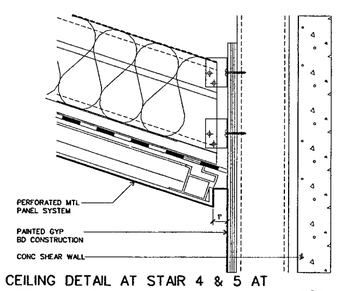

CEILING DETAIL AT STAIR 4 & 5 AT GROUND LEVEL (14)
SCALE 3 " = 1'-0

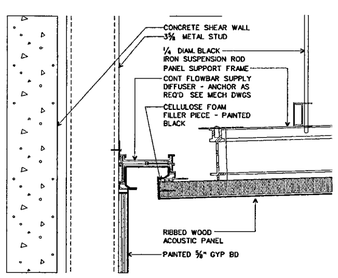

DETAIL AT CAFE WOOD PANEL CEILING (13)
SCALE 3 = 1'-0"

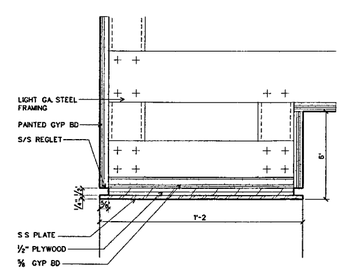

TYP. CEILING THRESHOLD DETAIL AT DRINKING FOUNTAINS (12)
SCALE 3 " = 1'-0"

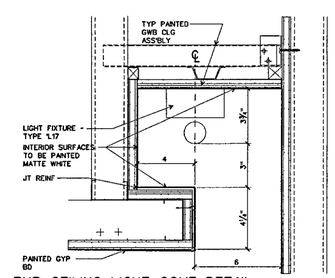

TYP. CEILING LIGHT COVE DETAIL AT DRINKING FOUNTAINS (11)
SCALE 3 " = 1'-0"

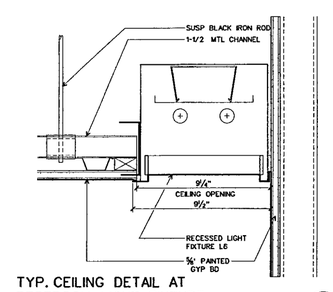

TYP. CEILING DETAIL AT RESTROOM LIGHT FIXTURE (10)
SCALE 3 " = 1'-0"

WILLIAM J CLINTON PRESIDENTIAL CENTER

LITTLE ROCK, ARKANSAS

Architect
POLSHEK PARTNERSHIP LLP
320 West 13th Street
New York, New York 10014
212.807.7171

Coordinating Architects
POLK STANLEY YEARY ARCHITECTS Ltd
700 South Schiller Street
Little Rock, Arkansas 72201
501 378 0878

WITSELL EVANS RASCO
901 West Third Street
Little Rock, Arkansas 72201
501 374 5300

WOODS CARADINE ARCHITECTS
2200 South Main Street
Little Rock, Arkansas 72206
501 374 4060

Landscape Architects
HARGREAVES ASSOCIATES
118 Magazine Street
Cambridge Massachusettes 02139
617 661 0070

LANDSCAPE ARCHITECTURE Inc.
2300 Cottondale Lane Suite 202
Little Rock, Arkansas 72202
501 374 5610

Structural Engineer
LESLIE E. ROBERTSON ASSOC RLLP
30 Broad Street, 47th Floor
New York, New York 10004
212 750 9000

MEP Engineers
FLACK + KURTZ Inc.
475 Fifth Avenue
New York, New York 10017
212 532 9600

CROMWELL ARCHITECTS ENGINEERS
101 South Spring Street
Little Rock, Arkansas 72201
501 372.2900

Curtainwall Consultant
R A. HEINTGES ARCHITECTS
126 Fifth Avenue, 9th Floor
New York, New York 10011
212 652-2966

Seal

RICHARD OLCAVE REGISTERED ARCHITECT 3405 ARKANSAS

Issue	Date
100% Construction Documents	09/27/02

Job No 9908

Scale 3" = 1'-0"

Date September 27, 2002

Title CEILING DETAILS

Sheet No A461

FOR OFFICIAL USE ONLY

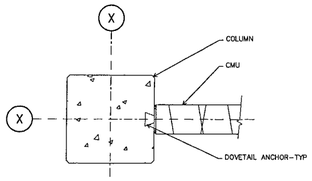

COLUMN DETAIL (TYPICAL) 53
SCALE 3/4" = 1'-0"

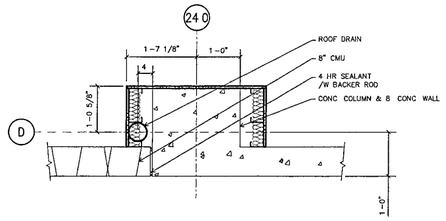

COLUMN DETAIL 51
SCALE 3/4" = 1-0"

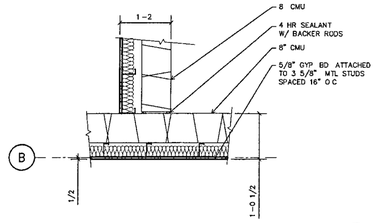

COLUMN DETAIL 50
SCALE 3/4" = 1'-0"

COLUMN DETAIL 43
SCALE 3/4" = 1'-0"

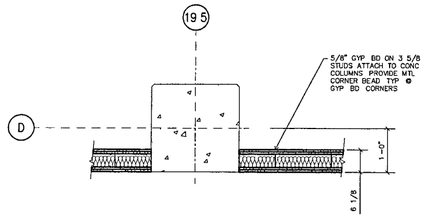

COLUMN DETAIL 42
SCALE 3/4" = 1'-0"

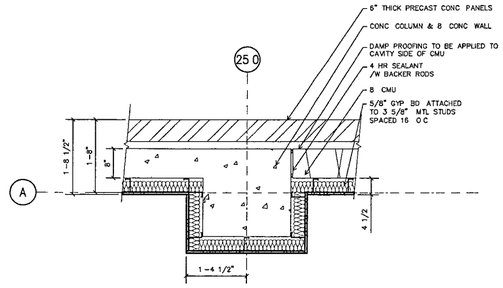

COLUMN DETAIL 41
SCALE 3/4" = 1'-0"

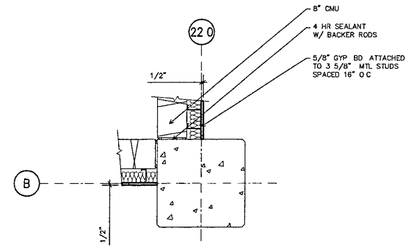

COLUMN DETAIL 40
SCALE 3/4" = 1'-0"

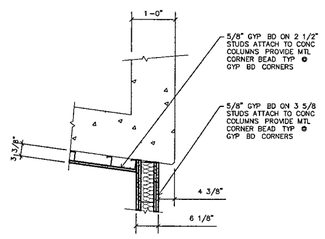

COLUMN DETAIL 33
SCALE 3/4" = 1'-0"

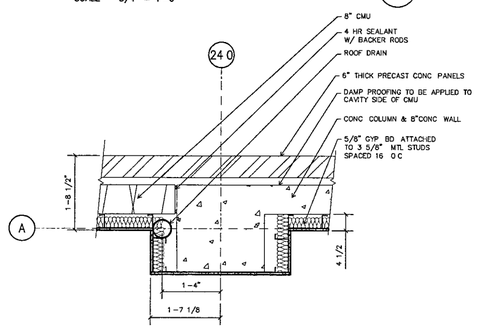

COLUMN DETAIL 32
SCALE 3/4" = 1'-0"

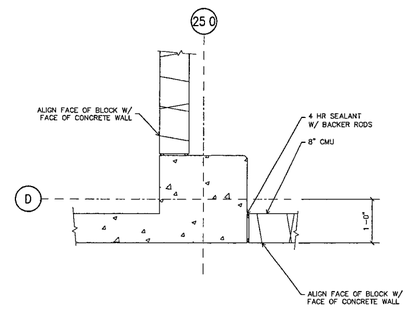

COLUMN DETAIL 31
SCALE 3/4" = 1'-0"

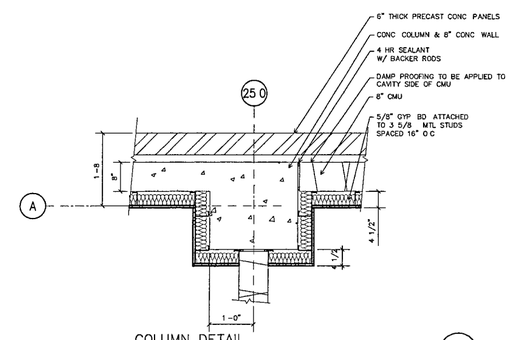

COLUMN DETAIL 30
SCALE 3/4" = 1'-0"

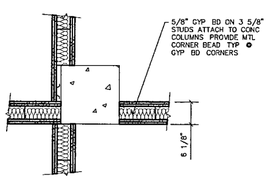

COLUMN DETAIL 23
SCALE 3/4" = 1'-0"

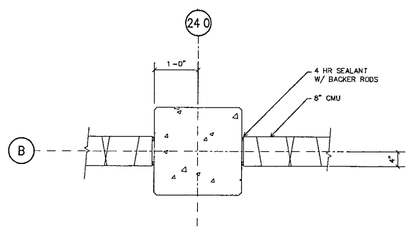

COLUMN DETAIL 22
SCALE 3/4" = 1'-0"

COLUMN DETAIL 21
SCALE 3/4" = 1'-0"

COLUMN DETAIL 20
SCALE 3/4" = 1'-0"

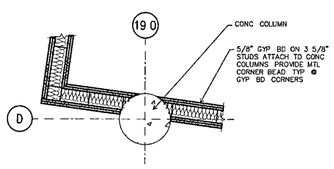

COLUMN DETAIL 13
SCALE 3/4" = 1'-0"

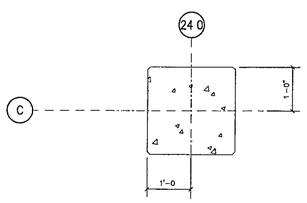

COLUMN DETAIL 12
SCALE 3/4" = 1'-0"

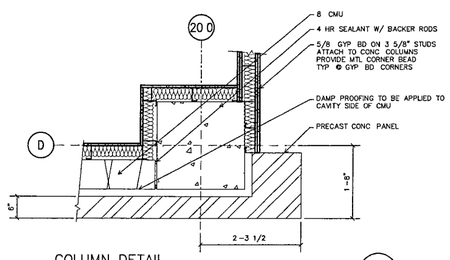

COLUMN DETAIL 11
SCALE 3/4" = 1'-0"

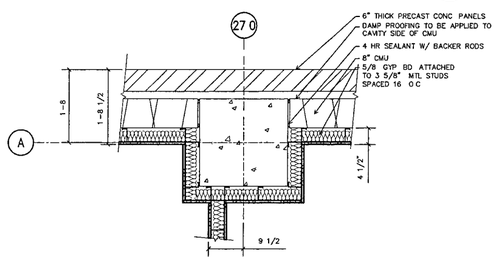

COLUMN DETAIL 10
SCALE 3/4" = 1'-0"

WILLIAM J. CLINTON PRESIDENTIAL CENTER

LITTLE ROCK, ARKANSAS

Architect

POLSHEK PARTNERSHIP LLP
320 West 13th Street
New York, New York 10014
212 807 7171

Coordinating Architects

POLK STANLEY YEARY ARCHITECTS Ltd
700 South Schiller Street
Little Rock, Arkansas 72201
501 378 0878

WITSELL EVANS RASCO
901 West Third Street
Little Rock, Arkansas 72201
501 374 5300

WOODS CARADINE ARCHITECTS
2200 South Main Street
Little Rock, Arkansas 72206
501 374 4060

Landscape Architects

HARGREAVES ASSOCIATES
118 Magazine Street
Cambridge, Massachusettes 02139
617 661 0070

LANDSCAPE ARCHITECTURE, Inc
2300 Cottondale Lane Suite 202
Little Rock, Arkansas 72202
501 374 5610

Structural Engineer

LESLIE E ROBERTSON ASSOC , RLLP
30 Broad Street, 47th Floor
New York, New York 10004
212 750 9000

MEP Engineers

FLACK + KURTZ Inc
475 Fifth Avenue
New York, New York 10017
212 532 9600

CROMWELL ARCHITECTS ENGINEERS
101 South Spring Street
Little Rock, Arkansas 72201
501 372 2900

Curtainwall Consultant

R. A HEINTGES ARCHITECTS
126 Fifth Avenue, 9th Floor
New York, New York 10011
212 652-2966

Seal

Issue	Date
100% Construction Documents	09/27/02
90% Progress Printing	08/30/02
100% Struct./CD Progress	07/01/02

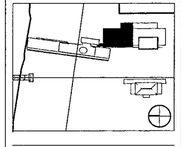

Job No
9908

Scale
3/4" = 1'-0"

Date
September 27, 2002

Title
ARCHIVE BUILDING
INTERIOR DETAILS

Sheet No
A470

FOR OFFICIAL USE ONLY

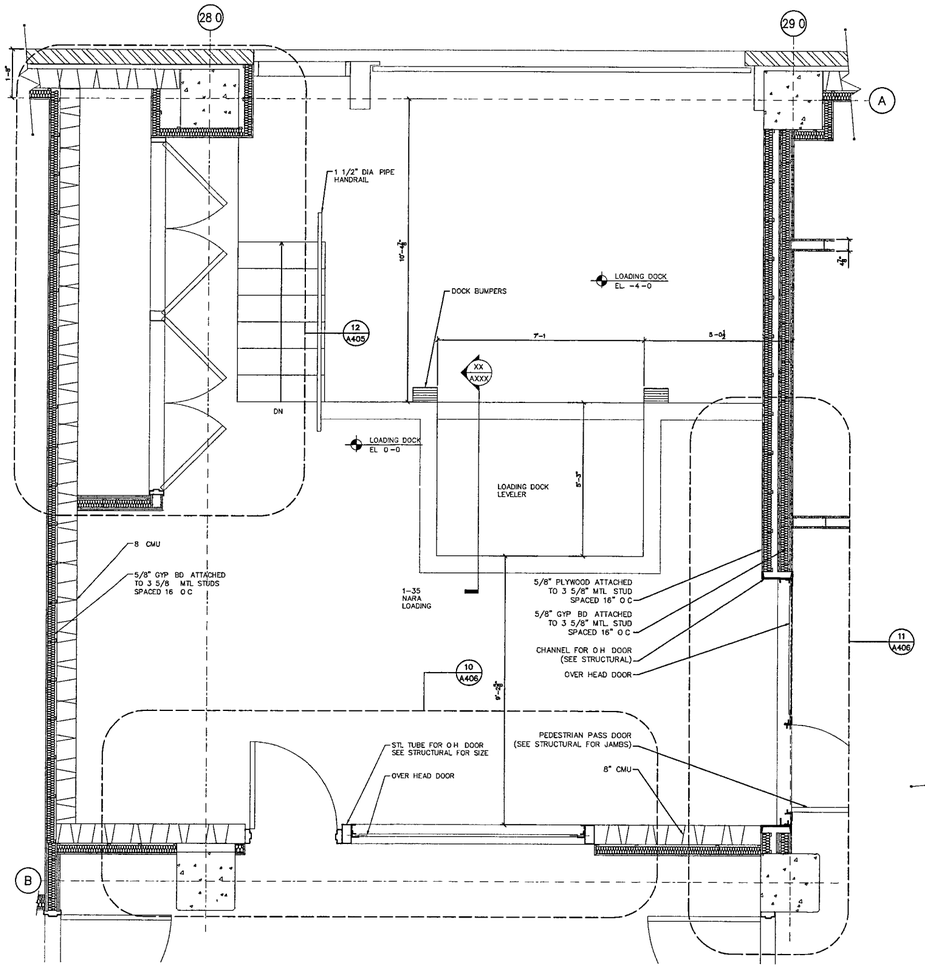

1-35 NARA LOADING ENLARGED PLAN 22

SCALE 1/2" = 1'-0"

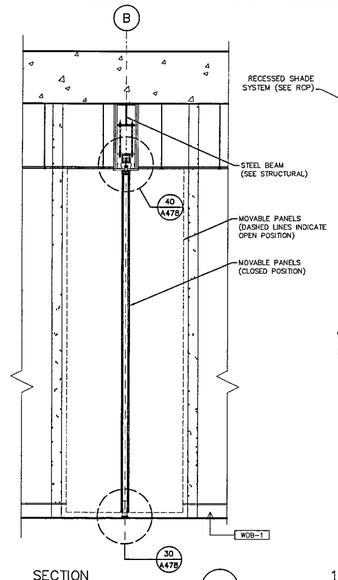

SECTION 41

SCALE 1/2" = 1'-0"

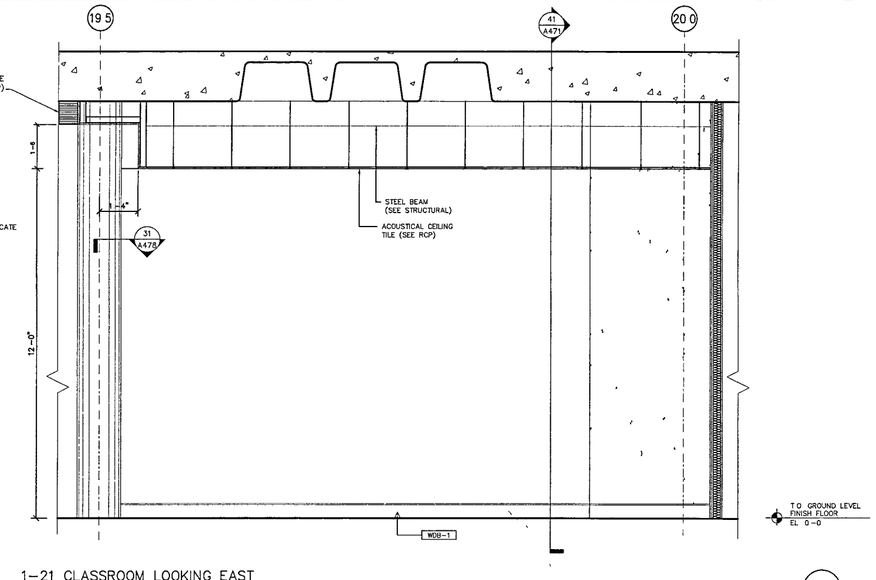

1-21 CLASSROOM LOOKING EAST 40

SCALE 1/2" = 1'-0"

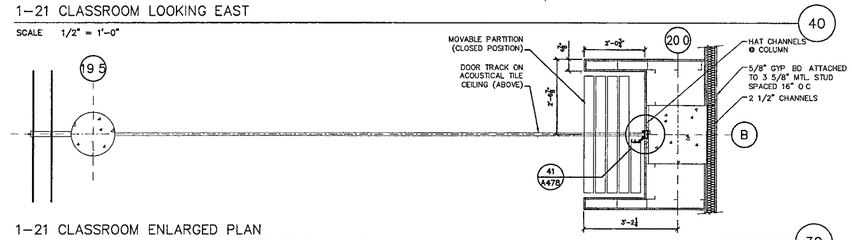

1-21 CLASSROOM ENLARGED PLAN 30

SCALE 1/2" = 1'-0"

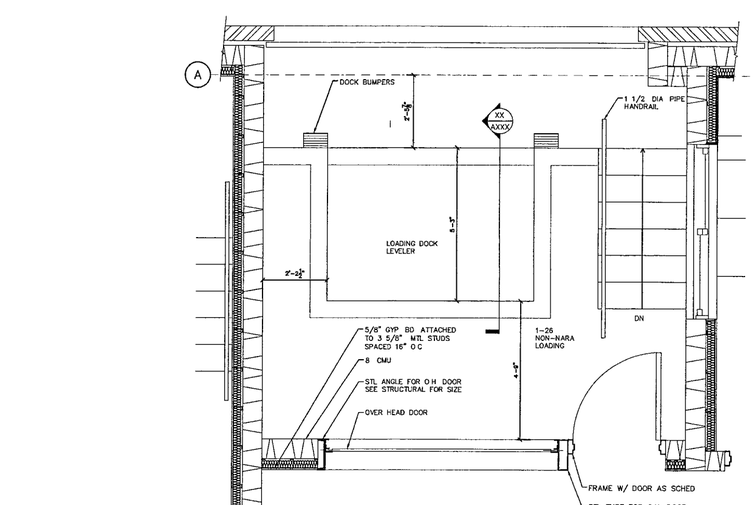

1-26 NON-NARA LOADING ENLARGED PLAN 12

SCALE 1/2" = 1'-0"

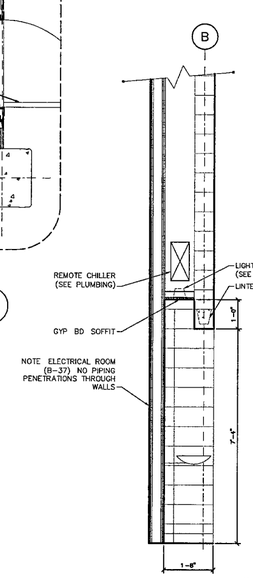

SECTION 23

SCALE 1/2" = 1'-0"

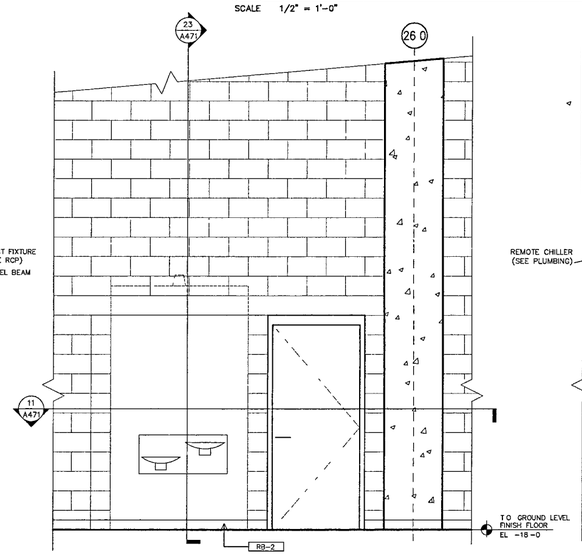

B-22 SOUTH CORRIDOR LOOKING EAST 22

SCALE 1/2" = 1'-0"

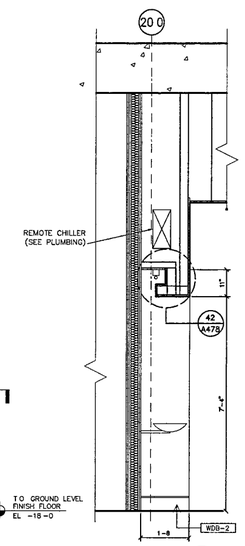

SECTION 21

SCALE 1/2" = 1'-0"

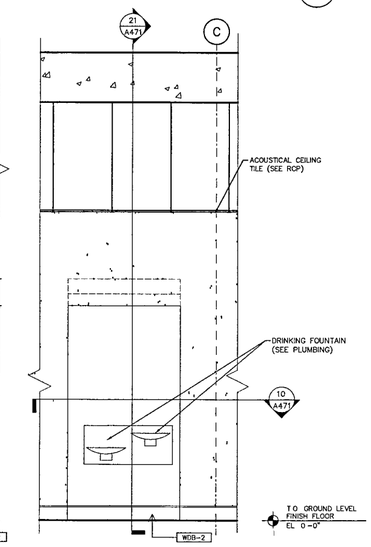

1-23 CORRIDOR LOOKING NORTH 20

SCALE 1/2" = 1'-0"

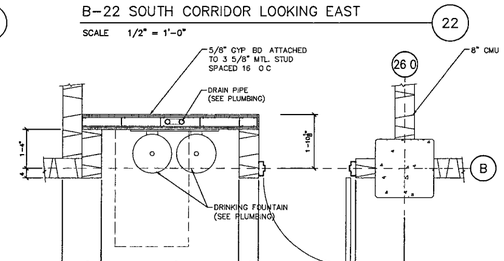

B-22 SOUTH CORRIDOR ENLARGED PLAN 11

SCALE 1/2" = 1'-0"

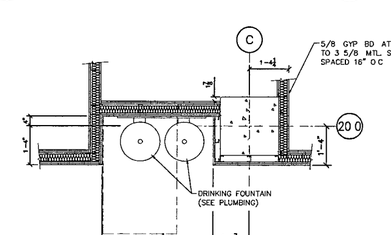

1-23 CORRIDOR ENLARGED PLAN 10

SCALE 1/2" = 1-0"

WILLIAM J CLINTON PRESIDENTIAL CENTER

LITTLE ROCK ARKANSAS

Architect

POLSHEK PARTNERSHIP LLP
320 West 13th Street
New York, New York 10014
212 807 7171

Coordinatng Architects

POLK STANLEY YEARY ARCHITECTS Ltd
700 South Schiller Street
Little Rock, Arkansas 72201
501 378 0878

WITSELL EVANS RASCO
901 West Third Street
Little Rock, Arkansas 72201
501 374 5300

WOODS CARADINE ARCHITECTS
2200 South Main Street
Little Rock Arkansas 72206
501 374 4060

Landscape Architects

HARGREAVES ASSOCIATES
116 Magazine Street
Cambridge, Massachusettes 02139
617 661 0070

LANDSCAPE ARCHITECTURE Inc
2300 Cottondale Lane Suite 202
Little Rock, Arkansas 72202
501 374 5610

Structural Engineer

LESLIE E ROBERTSON ASSOC RLLP
30 Broad Street, 47th Floor
New York, New York 10004
212 750 9000

MEP Engineers

FLACK + KURTZ Inc
475 Fifth Avenue
New York New York 10017
212 532 9600

CROMWELL ARCHITECTS ENGINEERS
101 South Spring Street
Little Rock Arkansas 72201
501 372.2900

Curtainwall Consultant

R A HEINTGES ARCHITECTS
126 Fifth Avenue, 9th Floor
New York, New York 10011
212 652-2966

Seal

WITSELL EVANS & RASCO P.A. REGISTERED ARCHITECTS 9/27/02 NO. C-44 ARKANSAS

Issue	Date
100% Construction Documents	09/27/02
90% Progress Printing	08/30/02
100% Struct/CD Progress	07/01/02

Job No 9908

Scale 1/2" = 1'-0"

Date September 27, 2002

Title

ARCHIVE BUILDING INTERIOR DETAILS

Sheet No

A471

FOR OFFICIAL USE ONLY

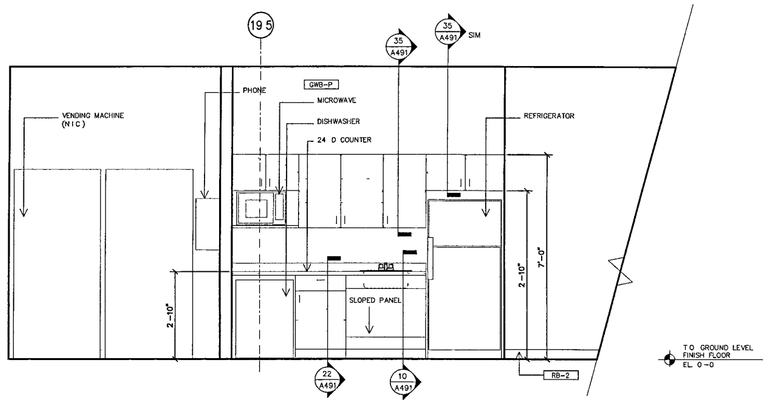

1-16 VOLUNTEER LOUNGE LOOKING EAST (41)

SCALE 1/2" = 1'-0"

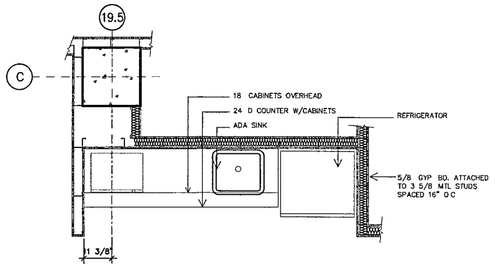

1-16 VOLUNTEER LOUNGE ENLARGED PLAN (31)

SCALE 1/2" = 1'-0"

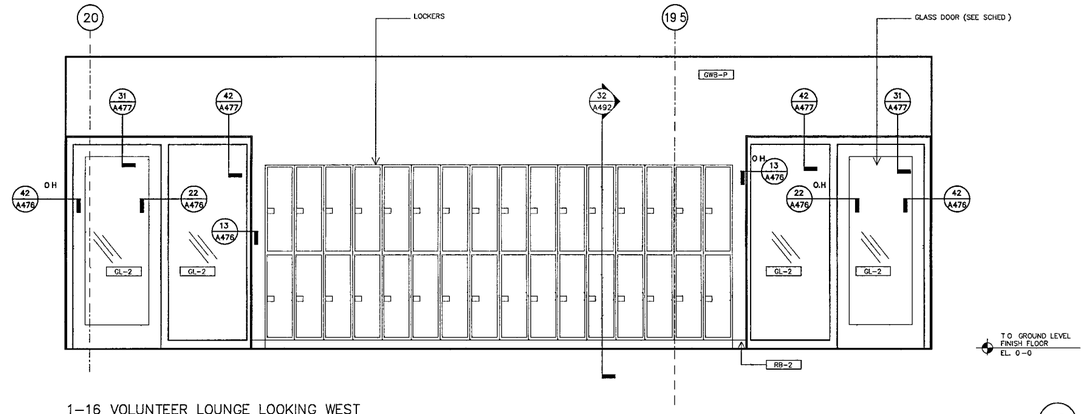

1-16 VOLUNTEER LOUNGE LOOKING WEST (40)

SCALE 1/2" = 1'-0"

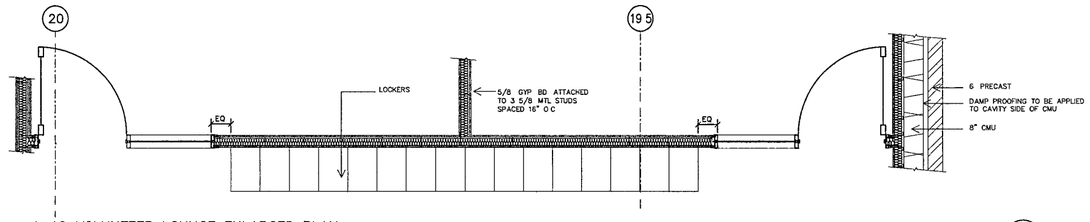

1-16 VOLUNTEER LOUNGE ENLARGED PLAN (30)

SCALE. 1/2" = 1'-0"

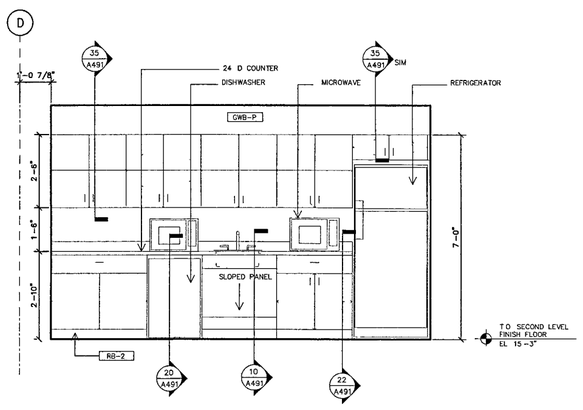

2-25 STAFF KITCHEN LOOKING NORTH (22)

SCALE 1/2" = 1'-0"

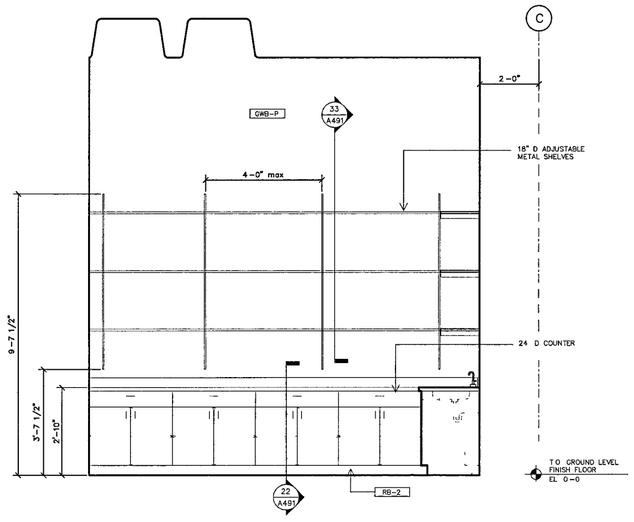

1-52 WET WORK ROOM LOOKING SOUTH (21)

SCALE 1/2" = 1'-0"

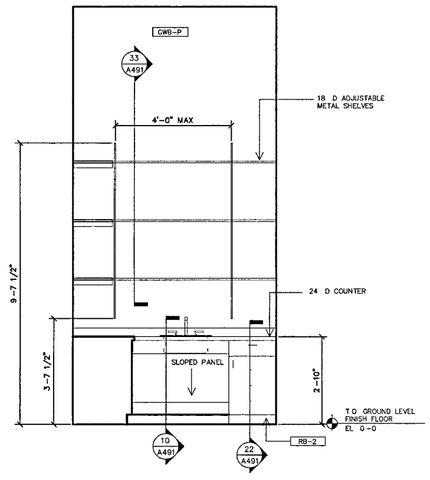

1-52 WET WORK ROOM LOOKING WEST (20)

SCALE. 1/2" = 1'-0"

WILLIAM J CLINTON PRESIDENTIAL CENTER

LITTLE ROCK, ARKANSAS

Architect

POLSHEK PARTNERSHIP LLP
320 West 13th Street
New York, New York 10014
212 807 7171

Coordinating Architects

POLK STANLEY YEARY ARCHITECTS Ltd
700 South Schiller Street
Little Rock, Arkansas 72201
501 378 0878

WITSELL EVANS RASCO
901 West Third Street
Little Rock, Arkansas 72201
501 374 5300

WOODS CARADINE ARCHITECTS
2200 South Main Street
Little Rock Arkansas 72206
501 374 4060

Landscape Architects

HARGREAVES ASSOCIATES
118 Magazine Street
Cambridge, Massachusettes 02139
617 661 0070

LANDSCAPE ARCHITECTURE Inc
2300 Colonade Lane Suite 202
Little Rock Arkansas 72202
501 374 5610

Structural Engineer

LESLIE E ROBERTSON ASSOC , RLLP
30 Broad Street 47th Floor
New York, New York 10004
212 750 9000

MEP Engineers

FLACK + KURTZ Inc
475 Fifth Avenue
New York, New York 10017
212 532 9600

CROMWELL ARCHITECTS ENGINEERS
101 South Spring Street
Little Rock Arkansas 72201
501 372 2900

Curtainwall Consultant

R. A. HEINTGES ARCHITECTS
126 Fifth Avenue 9th Floor
New York, New York 10011
212 652-2966

Seal

Issue	Date
100% Construction Documents	09/27/02
90% Progress Printing	08/30/02
100% Struct./CD Progress	07/01/02

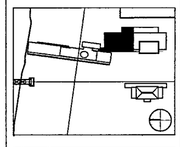

Job No 9908

Scale 1/2" = 1'-0"

Date September 27, 2002

Title

ARCHIVE BUILDING INTERIOR DETAILS

Sheet No

A472

FOR OFFICIAL USE ONLY

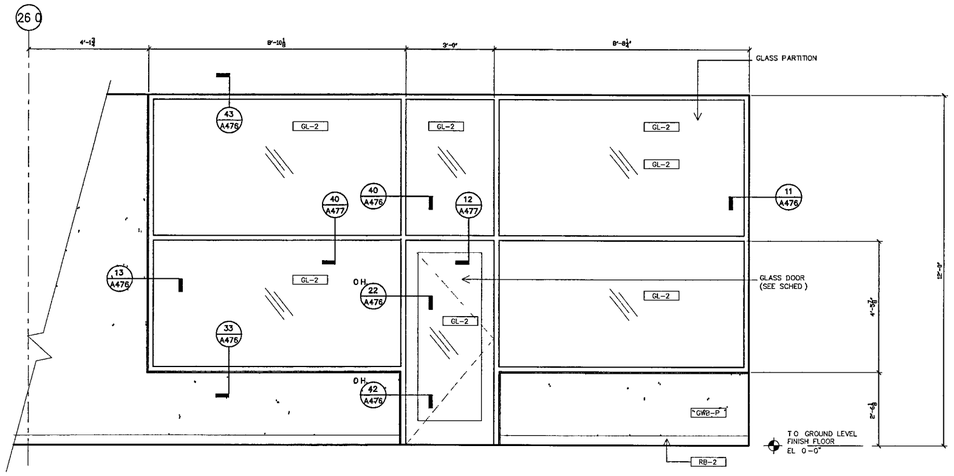

1-47 A/V LAB LOOKING WEST

SCALE 1/2" = 1'-0"

21

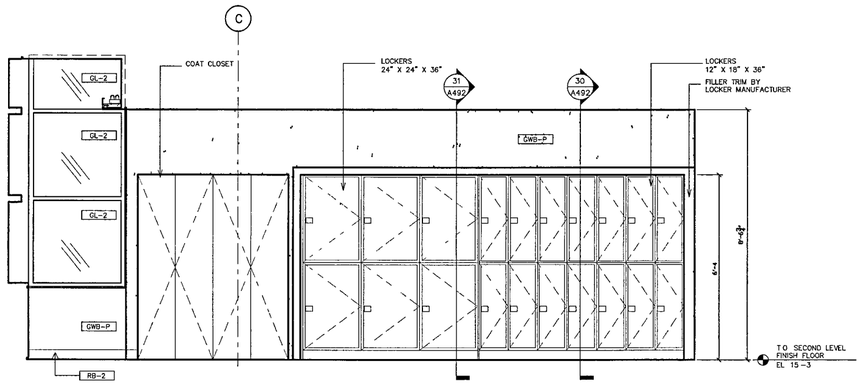

2-22 RESEARCH LOUNGE/LOCKERS LOOKING SOUTH

SCALE 1/2" = 1'-0"

20

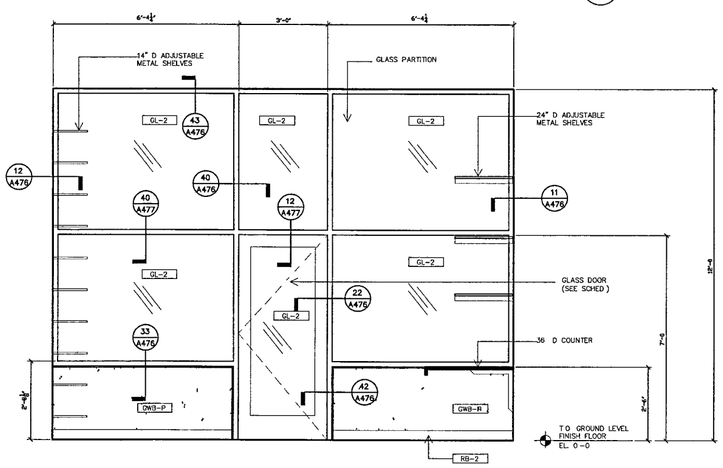

1-46 A/V RESEARCH LOOKING NORTH

SCALE 1/2" = 1'-0"

11

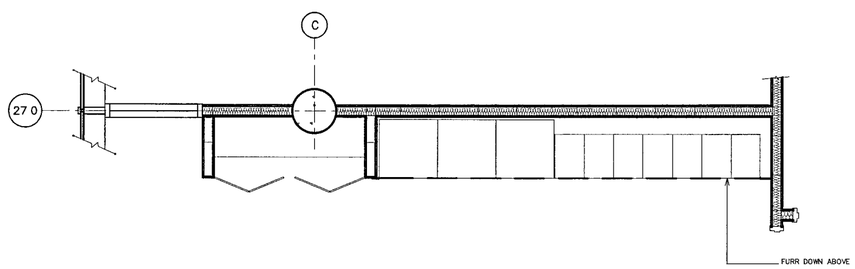

2-22 RESEARCH LOUNGE /LOCKERS ENLARGED PLAN

SCALE 1/2" = 1'-0"

10

WILLIAM J CLINTON PRESIDENTIAL CENTER

LITTLE ROCK, ARKANSAS

Architect

POLSHEK PARTNERSHIP LLP
320 West 13th Street
New York, New York 10014
212 807 7171

Coordinating Architects

POLK STANLEY YEARY ARCHITECTS Ltd
700 South Schiller Street
Little Rock Arkansas 72201
501 378 0878

WITSELL EVANS RASCO
901 West Third Street
Little Rock, Arkansas 72201
501 374 5300

WOODS CARADINE ARCHITECTS
2200 South Main Street
Little Rock Arkansas 72206
501 374 4060

Landscape Architects

HARGREAVES ASSOCIATES
118 Magazine Street
Cambridge Massachusetts 02139
617 661 0070

LANDSCAPE ARCHITECTURE, Inc
2300 Cottondale Lane Suite 202
Little Rock, Arkansas 72202
501 374 5610

Structural Engineer

LESLIE E ROBERTSON ASSOC , RLLP
30 Broad Street, 47th Floor
New York New York 10004
212 750 9000

MEP Engineers

FLACK + KURTZ Inc.
475 Fifth Avenue
New York New York 10017
212 532 9600

CROMWELL ARCHITECTS ENGINEERS
101 South Spring Street
Little Rock, Arkansas 72201
501 372 2900

Curtainwall Consultant

R. A. HEINTGES ARCHITECTS
126 Fifth Avenue 9th Floor
New York, New York 10011
212 652 2966

Seal

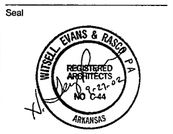

Issue	Date
100% Construction Documents	09/27/02
90% Progress Printing	08/30/02

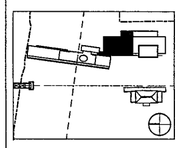

Job No 9908

Scale 1/2" = 1'-0"

Date September 27, 2002

Title

ARCHIVE BUILDING
INTERIOR DETAILS

Sheet No

A473

FOR OFFICIAL USE ONLY

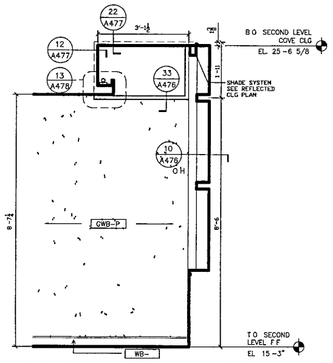

TYP COVE ELEVATION (43)
SCALE 1/2 " = 1 -0"

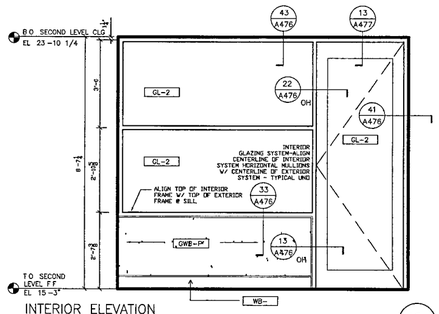

INTERIOR ELEVATION (42)
SCALE 1/2 " = 1'-0"

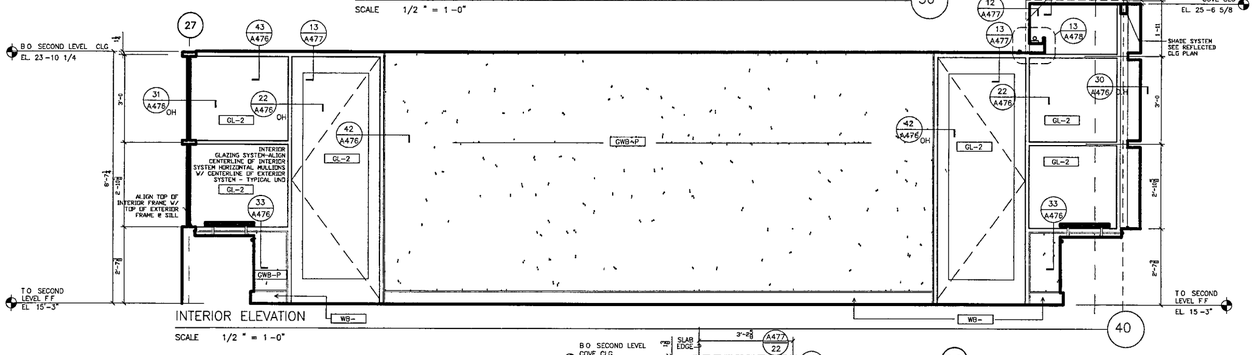

INTERIOR ELEVATION (40)
SCALE 1/2 " = 1 -0"

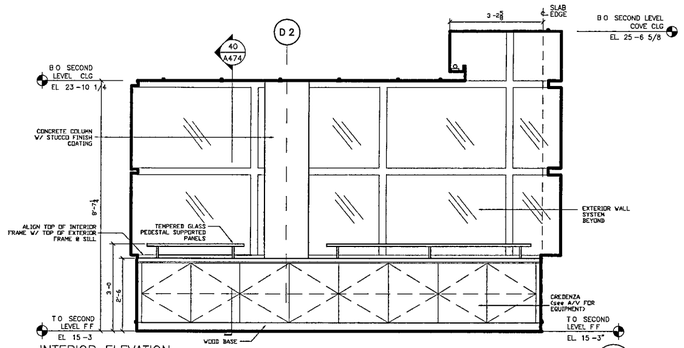

INTERIOR ELEVATION (50)
SCALE 1/2 " = 1 -0"

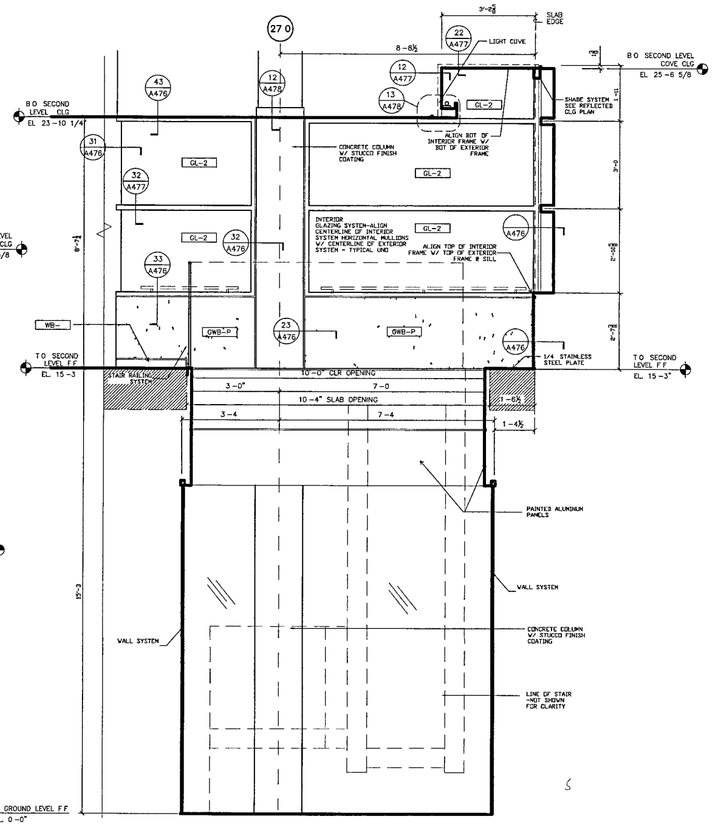

INTERIOR ELEVATION (12)
SCALE 1/2 " = 1'-0"

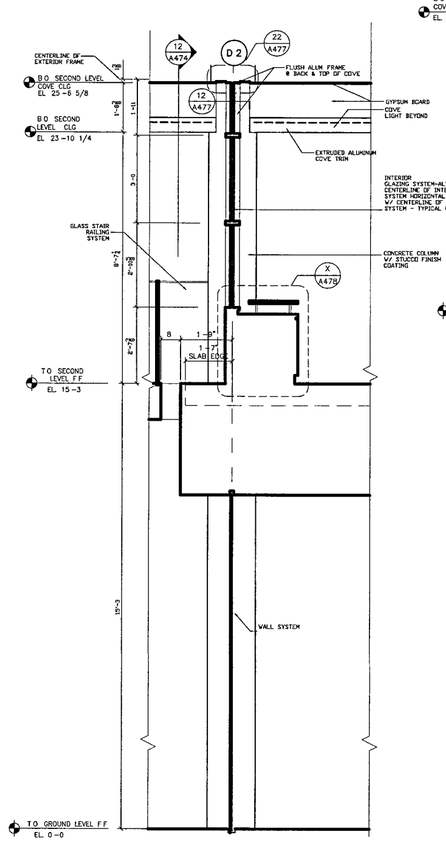

INTERIOR ELEVATION (11)
SCALE 1/2 " = 1 -0"

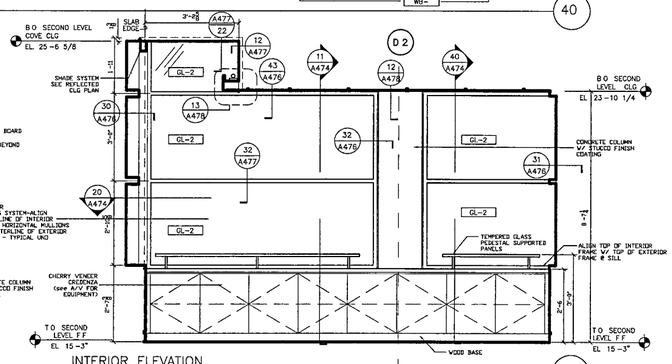

INTERIOR ELEVATION (30)
SCALE 1/2 " = 1 -0"

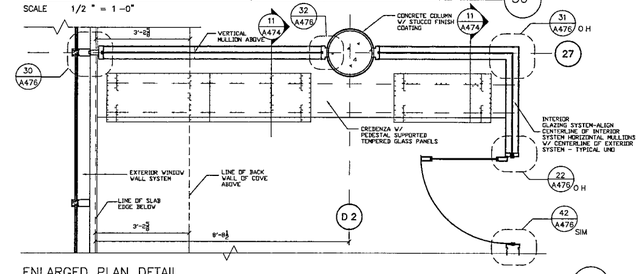

ENLARGED PLAN DETAIL (20)
SCALE 1/2 " = 1 -0"

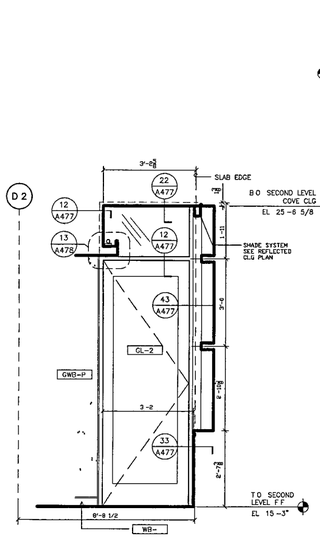

INTERIOR ELEVATION (23)
SCALE 1/2 " = 1'-0"

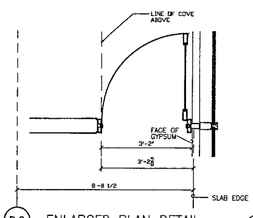

ENLARGED PLAN DETAIL (13)
SCALE 1/2 " = 1 -0"

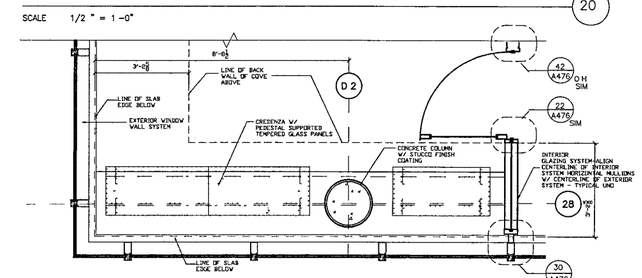

ENLARGED PLAN DETAIL (10)
SCALE 1/2 " = 1 -0"

WILLIAM J. CLINTON PRESIDENTIAL CENTER

LITTLE ROCK, ARKANSAS

Architect

POLSHEK PARTNERSHIP LLP
320 West 13th Street
New York, New York 10014
212 807 7171

Coordinating Architects

POLK STANLEY YEARY ARCHITECTS Ltd
700 South Schiller Street
Little Rock, Arkansas 72201
501 378.0878

WITSELL EVANS RASCO
901 West Third Street
Little Rock, Arkansas 72201
501 374 5300

WOODS CARADINE ARCHITECTS
2200 South Main Street
Little Rock, Arkansas 72206
501 374.4060

Landscape Architects

HARGREAVES ASSOCIATES
116 Magazine Street
Cambridge, Massachusetts 02139
617 661 0070

LANDSCAPE ARCHITECTURE, Inc.
2300 Cottondale Lane Suite 202
Little Rock, Arkansas 72202
501 374 5610

Structural Engineer

LESLIE E. ROBERTSON ASSOC., RLLP
30 Broad Street, 47th Floor
New York, New York 10004
212.750 9000

MEP Engineers

FLACK + KURTZ Inc.
475 Fifth Avenue
New York, New York 10017
212 532 9600

CROMWELL ARCHITECTS ENGINEERS
101 South Spring Street
Little Rock, Arkansas 72201
501 372 2900

Curtainwall Consultant

R. A. HEINTGES ARCHITECTS
126 Fifth Avenue 9th Floor
New York, New York 10011
212 652 2966

Seal

WITSELL, EVANS & RASCO, P.A. REGISTERED ARCHITECTS NO 044 ARKANSAS

Issue	Date
100% Construction Documents	09/27/02
90% Progress Printing	08/30/02

Job No 9908

Scale 1/2" = 1'-0"

Date September 27, 2002

Title

ARCHIVE BUILDING
INTERIOR DETAILS

Sheet No

A474

FOR OFFICIAL USE ONLY

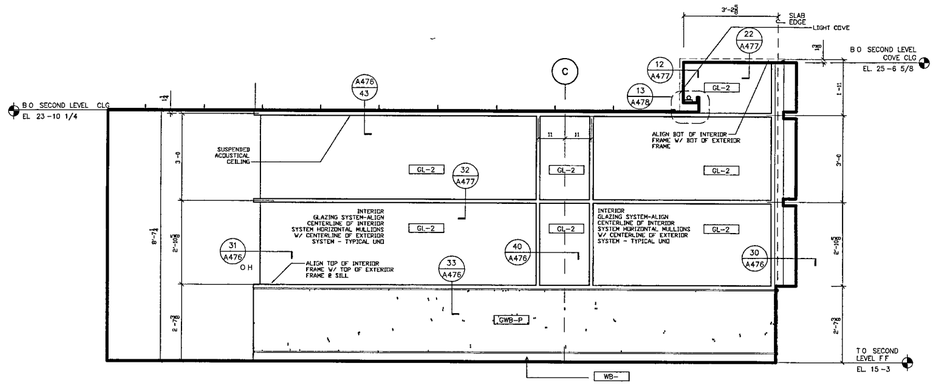

RESEARCH LOUNGE/LOCKERS 2-22 (42)

SCALE 1/2 " = 1'-0"

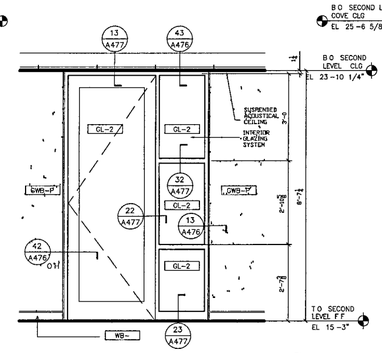

RESEARCH LOUNGE/LOCKERS 2-22 (41)

SCALE 1/2 " = 1 -0"

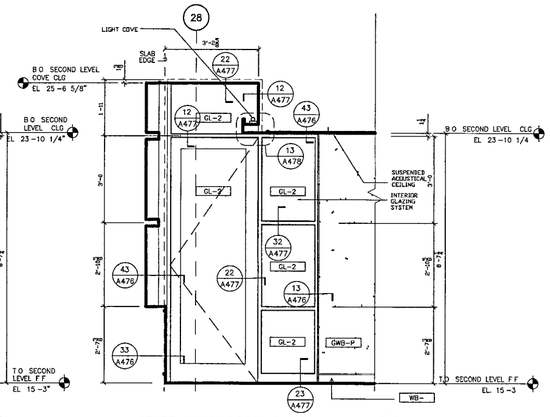

STAFF LUNCHROOM 2-23 (40)

SCALE 1/2 " = 1'-0"

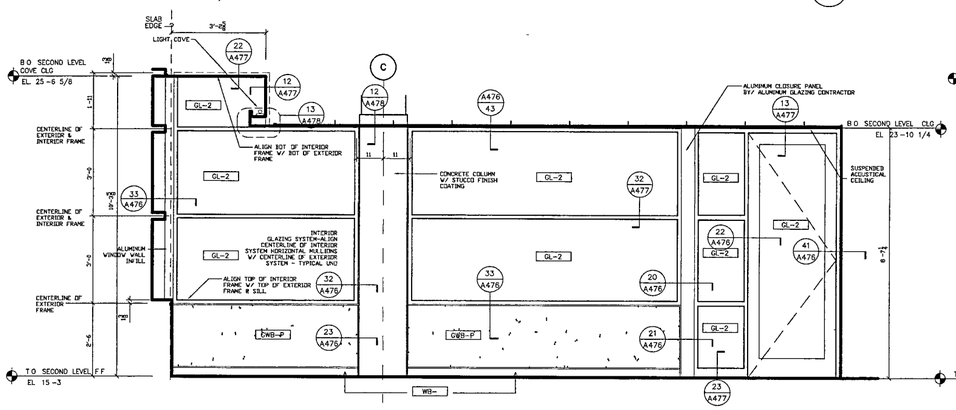

RESEARCHER ROOM 2-19 (32)

SCALE 1/2 " = 1'-0"

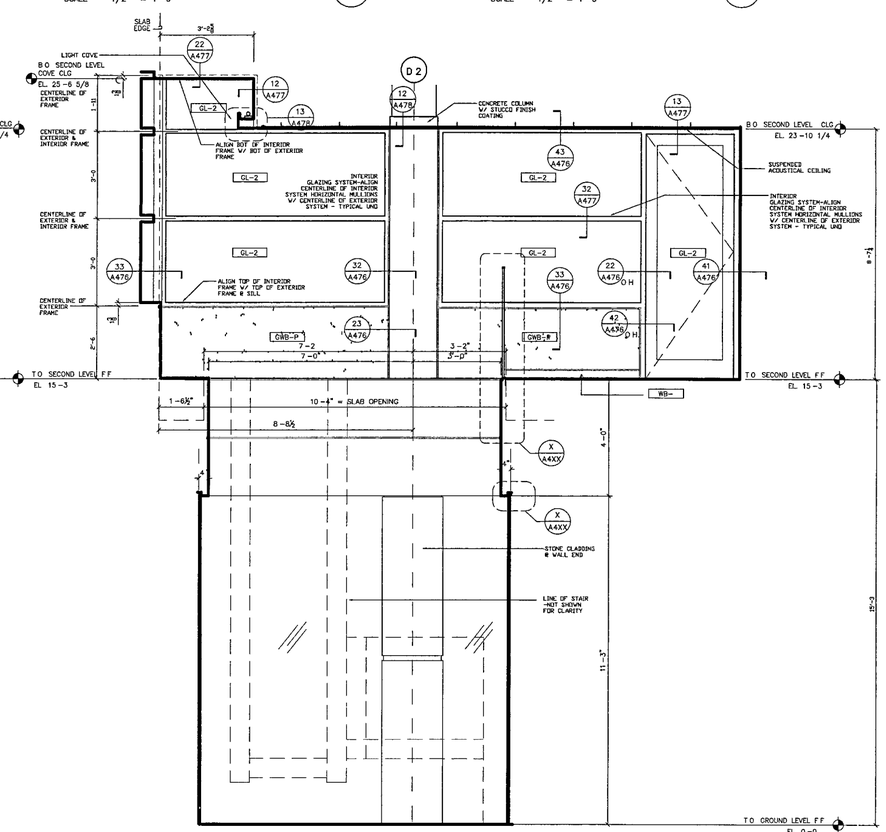

INTERIOR ELEVATION – STAIR 12 (20)

SCALE 1/2 " = 1 -0"

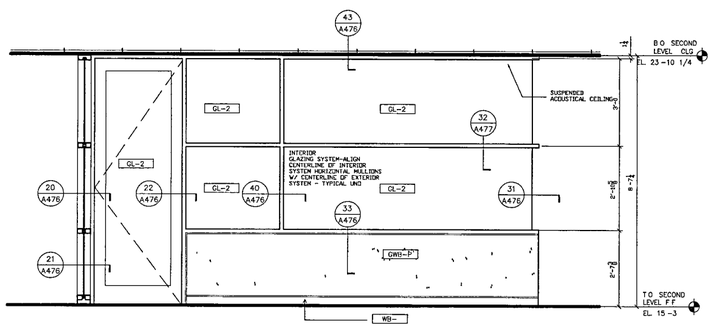

RESEARCH LOUNGE/LOCKERS 2-22 (22)

SCALE 1/2 " = 1'-0"

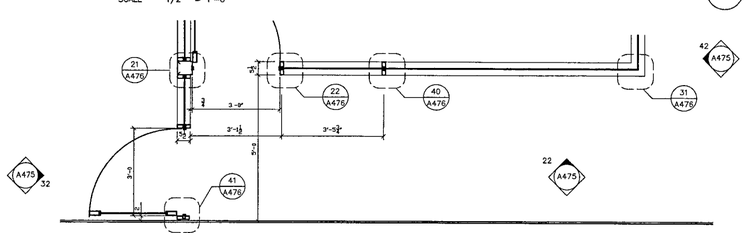

ENLARGED PLAN DETAIL (12)

SCALE 1/2 " = 1 -0"

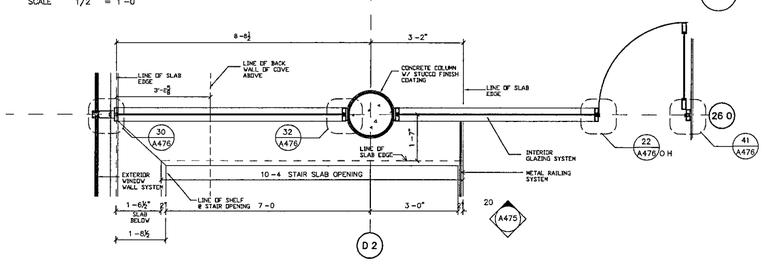

ENLARGED PLAN DETAIL –STAIR 12 –SECOND FLOOR (10)

SCALE 1/2 " = 1'-0"

WILLIAM J CLINTON PRESIDENTIAL CENTER

LITTLE ROCK ARKANSAS

Architect

POLSHEK PARTNERSHIP LLP
320 West 13th Street
New York, New York 10014
212 807 7171

Coordinating Architects

POLK STANLEY YEARY ARCHITECTS Ltd
700 South Schiller Street
Little Rock, Arkansas 72201
501 378 0878

WITSELL EVANS RASCO
901 West Third Street
Little Rock, Arkansas 72201
501 374 5300

WOODS CARADINE ARCHITECTS
2200 South Main Street
Little Rock, Arkansas 72206
501 374.4060

Landscape Architects

HARGREAVES ASSOCIATES
116 Magazine Street
Cambridge, Massachusettes 02139
617 661 0070

LANDSCAPE ARCHITECTURE, Inc
2300 Cottondale Lane Suite 202
Little Rock, Arkansas 72202
501 374 5510

Structural Engineer

LESLIE E ROBERTSON ASSOC , RLLP
30 Broad Street, 47th Floor
New York, New York 10004
212 750 9000

MEP Engineers

FLACK + KURTZ Inc.
475 Fifth Avenue
New York, New York 10017
212 532 9600

CROMWELL ARCHITECTS ENGINEERS
101 South Spring Street
Little Rock, Arkansas 72201
501 372 2900

Curtainwall Consultant

R. A. HEINTGES ARCHITECTS
126 Fifth Avenue, 9th Floor
New York, New York 10011
212 652-2966

Seal

WITSELL EVANS & RASCO P.A. REGISTERED ARCHITECTS NO C44 9-27-02 ARKANSAS

Issue	Date
100% Construction Documents	09/27/02
90% Progress Printing	08/30/02

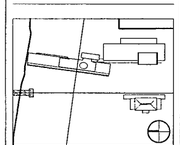

Job No 9908

Scale 1/2" = 1'-0"

Date September 27, 2002

Title

ARCHIVE BUILDING INTERIOR DETAILS

Sheet No

A475

FOR OFFICIAL USE ONLY

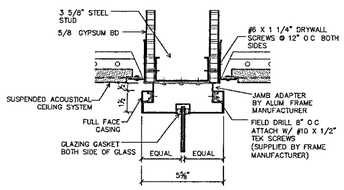

SECTION DETAIL (43)

SCALE 3" = 1'-0"

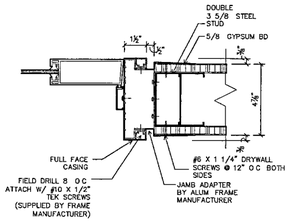

SECTION DETAIL (42)

SCALE 3" = 1'-0"

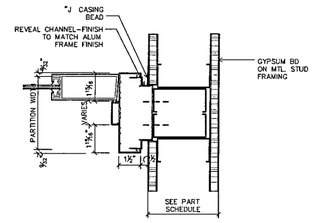

SECTION DETAIL (41)

SCALE 3" = 1'-0"

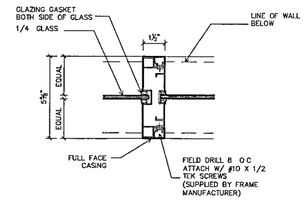

SECTION DETAIL (40)

SCALE 3" = 1'-0"

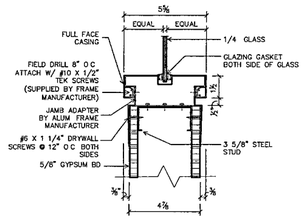

SECTION DETAIL (33)

SCALE 3" = 1'-0"

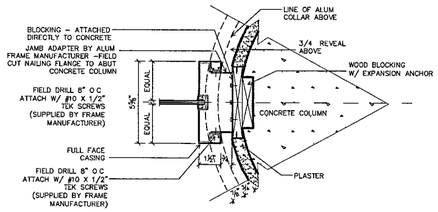

COLUMN ENCLOSURE DETAIL (32)

SCALE 3" = 1'-0"

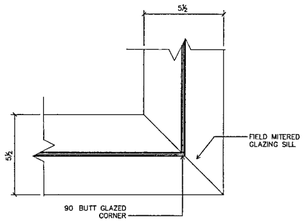

INTERIOR GLAZING CORNER DETAIL (31)

SCALE 3" = 1'-0"

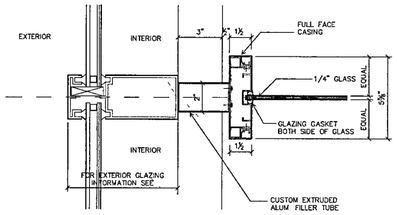

PLAN DETAIL (30)

SCALE 3" = 1'-0"

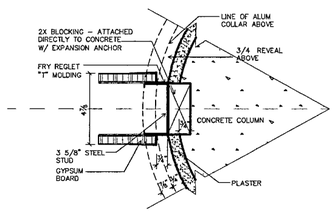

COLUMN ENCLOSURE DETAIL (23)

SCALE 3" = 1'-0"

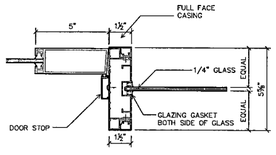

SECTION DETAIL (22)

SCALE 3" = 1'-0"

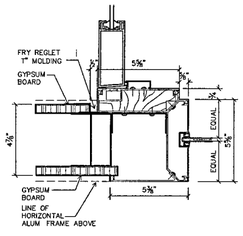

SECTION DETAIL (21)

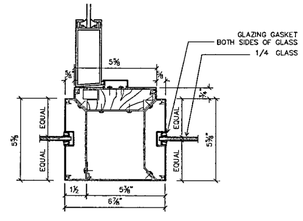

SECTION DETAIL (20)

SCALE 3" = 1'-0"

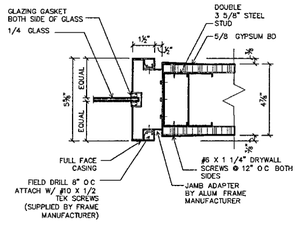

COLUMN ENCLOSURE DETAIL (13)

SCALE 3" = 1'-0"

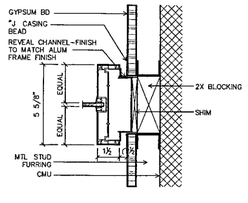

COLUMN ENCLOSURE DETAIL (12)

SCALE 3" = 1'-0"

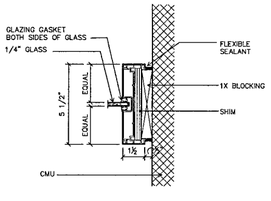

FRAME DETAIL (11)

SCALE 3" = 1'-0"

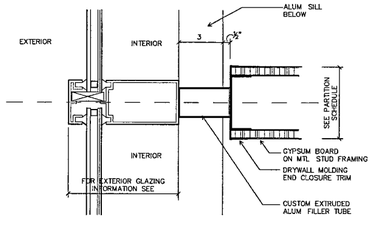

PLAN DETAIL (10)

SCALE 3" = 1'-0"

WILLIAM J. CLINTON PRESIDENTIAL CENTER

LITTLE ROCK, ARKANSAS

Architect

POLSHEK PARTNERSHIP LLP
320 West 13th Street
New York, New York 10014
212 807 7171

Coordinating Architects

POLK STANLEY YEARY ARCHITECTS Ltd
700 South Schiller Street
Little Rock, Arkansas 72201
501 378 0878

WITSELL EVANS RASCO
901 West Third Street
Little Rock, Arkansas 72201
501 374 5300

WOODS CARADINE ARCHITECTS
2200 South Main Street
Little Rock, Arkansas 72206
501 374 4060

Landscape Architects

HARGREAVES ASSOCIATES
118 Magazine Street
Cambridge, Massachusettes 02139
617 661 0070

LANDSCAPE ARCHITECTURE, Inc
2300 Cottondale Lane Suite 202
Little Rock, Arkansas 72202
501 374 5610

Structural Engineer

LESLIE E ROBERTSON ASSOC , RLLP
30 Broad Street, 47th Floor
New York, New York 10004
212 750 9000

MEP Engineers

FLACK + KURTZ Inc.
475 Fifth Avenue
New York, New York 10017
212 532 9600

CROMWELL ARCHITECTS ENGINEERS
101 South Spring Street
Little Rock, Arkansas 72201
501 372.2900

Curtainwall Consultant

R. A. HEINTGES ARCHITECTS
126 Fifth Avenue 9th Floor
New York, New York 10011
212.652 2966

Seal

WITSELL EVANS & RASCO, P.A. REGISTERED ARCHITECTS NO 244 ARKANSAS

Issue	Date
100% Construction Documents	09/27/02
90% Progress Printing	08/30/02

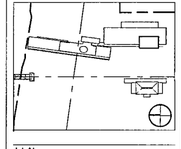

Job No 9908

Scale 3" = 1'-0"

Date September 27 2002

Title

ARCHIVE BUILDING INTERIOR DETAILS

Sheet No

A476

FOR OFFICIAL USE ONLY

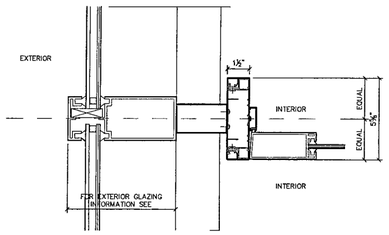

FRAME DETAIL – PLAN @ EXTERIOR WALL TIE-IN (43)

SCALE 3 " = 1'-0"

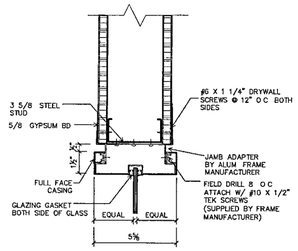

FRAME DETAIL–GLAZING HEAD (42)

SCALE 3 " = 1'-0"

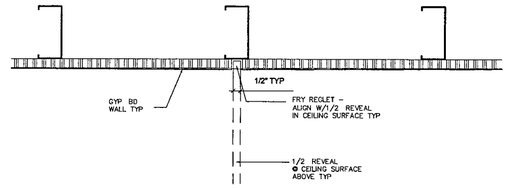

WALL DETAIL – TYPICAL REVEAL (41)

SCALE 3 " = 1'-0"

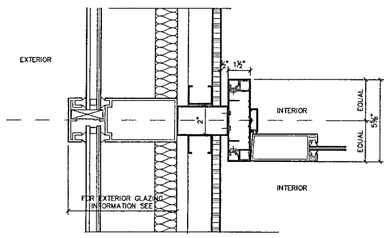

FRAME DETAIL– PLAN @ EXTERIOR WALL TIE-IN (33)

SCALE 3 " = 1 -0"

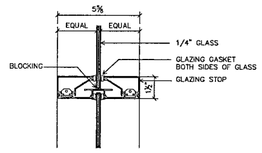

FRAME DETAIL–HORIZONTAL MULLION (32)

SCALE 3 " = 1 -0"

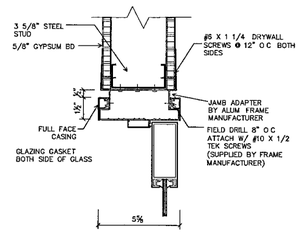

FRAME DETAIL–DOOR HEAD (31)

SCALE 3 " = 1'-0"

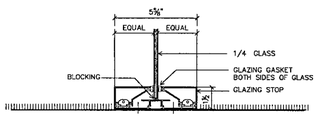

FRAME DETAIL – SILL (23)

SCALE 3 " = 1 -0"

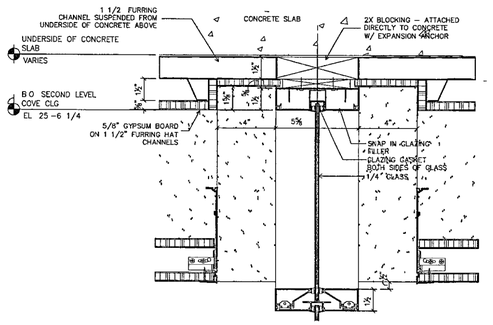

FRAME DETAIL – RECESSED HEAD (22)

SCALE 3 = 1'-0

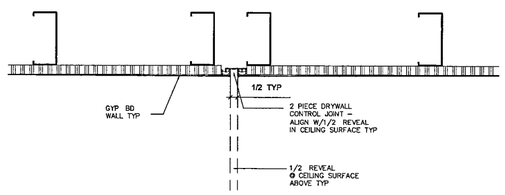

WALL DETAIL – TYPICAL CONTROL JOINT (21)

SCALE 3 " = 1 -0"

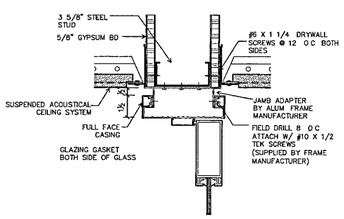

FRAME DETAIL – DOOR HEAD (13)

SCALE 3 " = 1 -0"

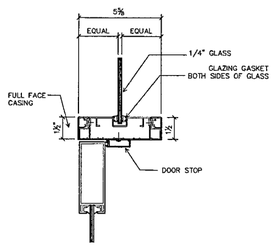

FRAME DETAIL – DOOR HEAD TO TRANSOM (12)

SCALE 3 " = 1'-0"

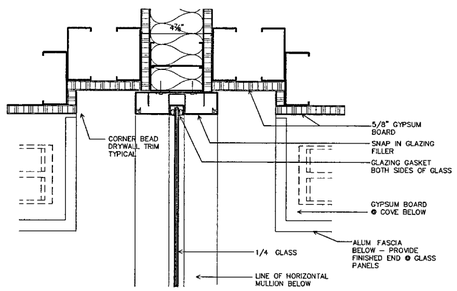

FRAME PLAN DETAIL – RECESSED VERTICAL MULLION (11)

SCALE 3 " = 1 -0"

WILLIAM J. CLINTON PRESIDENTIAL CENTER

LITTLE ROCK, ARKANSAS

Architect

POLSHEK PARTNERSHIP LLP
320 West 13th Street
New York, New York 10014
212 807 7171

Coordinating Architects

POLK STANLEY YEARY ARCHITECTS Ltd
700 South Schiller Street
Little Rock, Arkansas 72201
501 378 0878

WITSELL EVANS RASCO
901 West Third Street
Little Rock, Arkansas 72201
501 374 5300

WOODS CARADINE ARCHITECTS
2200 South Main Street
Little Rock, Arkansas 72206
501 374 4060

Landscape Architects

HARGREAVES ASSOCIATES
118 Magazine Street
Cambridge, Massachusettes 02139
617 661 0070

LANDSCAPE ARCHITECTURE, Inc.
2300 Cottondale Lane Suite 202
Little Rock, Arkansas 72202
501.374.5810

Structural Engineer

LESLIE E ROBERTSON ASSOC , RLLP
30 Broad Street, 47th Floor
New York, New York 10004
212 750 9000

MEP Engineers

FLACK + KURTZ Inc
475 Fifth Avenue
New York, New York 10017
212 532 9600

CROMWELL ARCHITECTS ENGINEERS
101 South Spring Street
Little Rock, Arkansas 72201
501 372.2900

Curtainwall Consultant

R A. HEINTGES ARCHITECTS
126 Fifth Avenue, 9th Floor
New York, New York 10011
212 652-2966

Seal

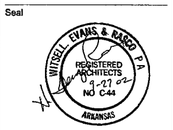

Issue	Date
100% Construction Documents	09/27/02

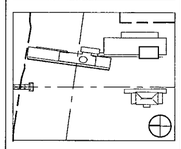

Job No 9908

Scale 3" = 1'-0"

Date – September 27, 2002

Title

ARCHIVE BUILDING INTERIOR DETAILS

Sheet No

A477

FOR OFFICIAL USE ONLY

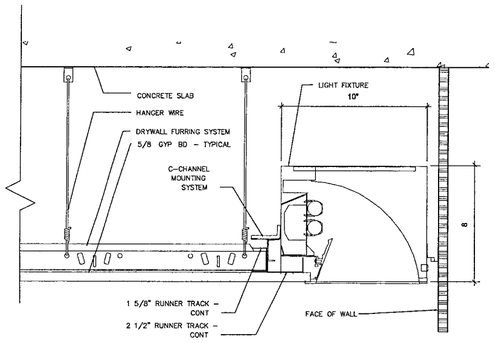

CEILING DETAIL (43)
SCALE 3" = 1'–0"

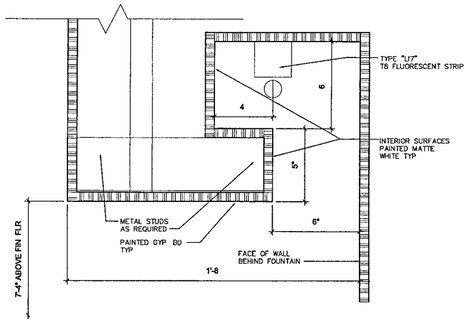

CEILING DETAIL – @ WATER FOUNTAIN (42)
SCALE 3" = 1'–0"

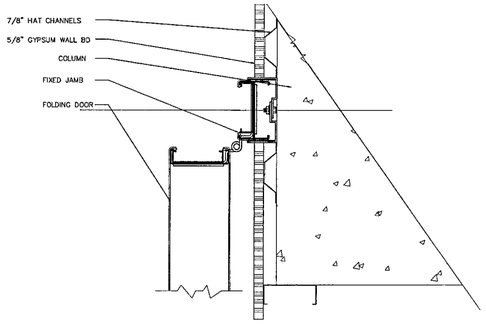

FOLDING DOOR DETAIL (41)
SCALE 3" = 1'–0"

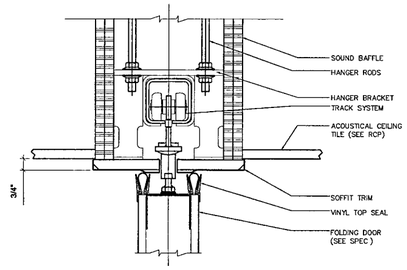

FOLDING DOOR DETAIL (40)
SCALE 3" = 1'–0"

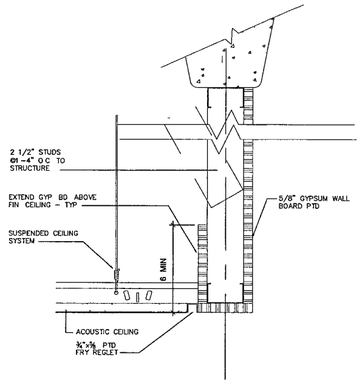

CEILING DETAIL (33)
SCALE 3" = 1'–0"

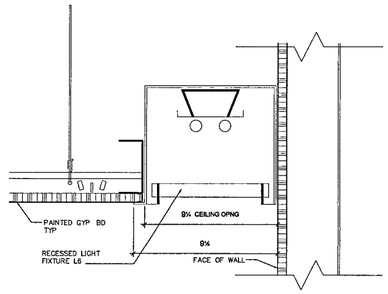

CEILING DETAIL – @ TOILET ROOMS (32)
SCALE 3" = 1'–0"

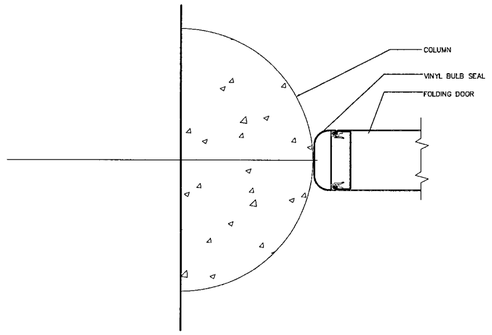

FOLDING DOOR DETAIL (31)
SCALE 3" = 1'–0"

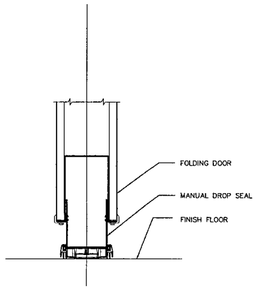

FOLDING DOOR DETAIL (30)
SCALE 3" = 1'–0"

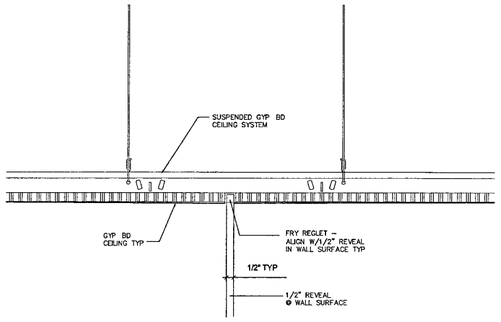

REVEAL JOINT AT 1–13 NORTH CORR CEILING (23)
SCALE 3" = 1'–0"

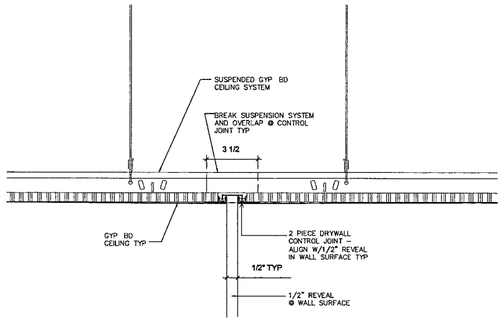

CONTROL JOINT AT 1–13 NORTH CORR CEILING (22)
SCALE 3" = 1'–0"

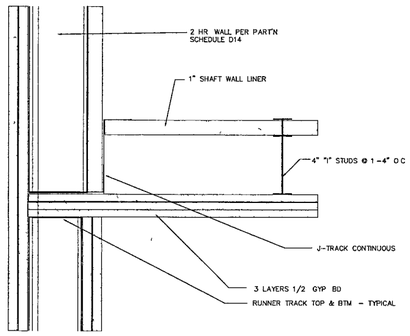

RATED CEILING DETAIL (21)
SCALE 3" = 1'–0"

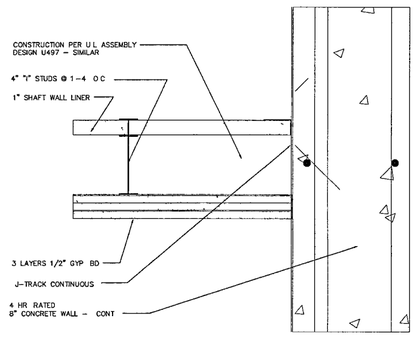

RATED CEILING DETAIL (20)
SCALE 3" = 1'–0"

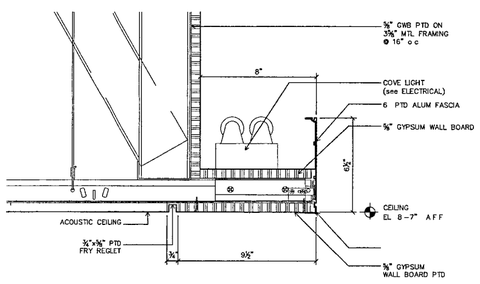

LIGHT COVE AT 2–18 CORRIDOR (13)
SCALE 3" = 1'–0"

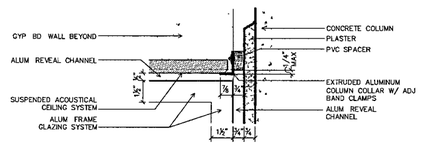

REVEAL DETAIL AT COLUMN (12)
SCALE 3" = 1'–0"

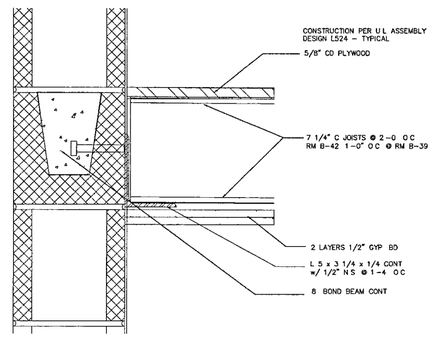

RATED CEILING DETAIL (11)
SCALE 3" = 1'–0"

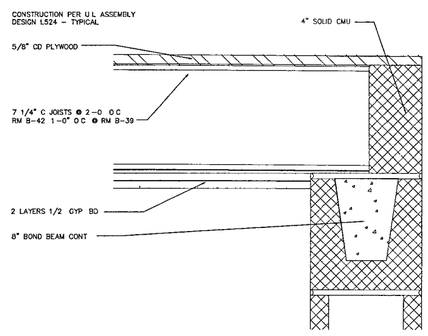

RATED CEILING DETAIL (10)
SCALE 3" = 1'–0"

WILLIAM J CLINTON PRESIDENTIAL CENTER

LITTLE ROCK, ARKANSAS

Architect

POLSHEK PARTNERSHIP LLP
320 West 13th Street
New York, New York 10014
212 807 7171

Coordinating Architects

POLK STANLEY YEARY ARCHITECTS Ltd
700 South Schiller Street
Little Rock, Arkansas 72201
501 378 0878

WITSELL EVANS RASCO
901 West Third Street
Little Rock Arkansas 72201
501 374 5300

WOODS CARADINE ARCHITECTS
2200 South Main Street
Little Rock, Arkansas 72206
501 374 4060

Landscape Architects

HARGREAVES ASSOCIATES
118 Magazine Street
Cambridge, Massachusetts 02139
617 661 0070

LANDSCAPE ARCHITECTURE, Inc
2300 Cottondale Lane Suite 202
Little Rock, Arkansas 72202
501 374 5610

Structural Engineer

LESLIE E ROBERTSON ASSOC , RLLP
30 Broad Street, 47th Floor
New York, New York 10004
212 750 9000

MEP Engineers

FLACK + KURTZ Inc
475 Fifth Avenue
New York, New York 10017
212 532.9600

CROMWELL ARCHITECTS ENGINEERS
101 South Spring Street
Little Rock, Arkansas 72201
501 372.2900

Curtainwall Consultant

R. A HEINTGES ARCHITECTS
126 Fifth Avenue, 9th Floor
New York, New York 10011
212 652 2966

Seal

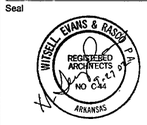

Issue	Date
100% Construction Documents	09/27/02
90% Progress Printing	08/30/02

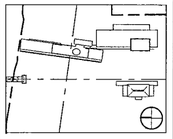

Job No 9908

Scale AS NOTED

Date September 27, 2002

Title
ARCHIVE BUILDING
INTERIOR DETAILS
CEILING DETAILS

Sheet No
A478

FOR OFFICIAL USE ONLY

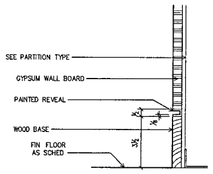

WDB – 1
WOOD BASE AT CORRIDOR (43)
SCALE 3" = 1'-0"

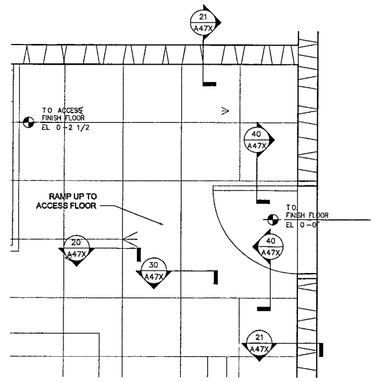

PARTIAL PLAN – NARA COMPUTER (42)
SCALE 1/2" = 1'-0"

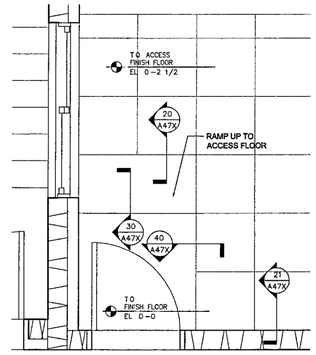

PARTIAL PLAN – SECURITY OFFICE (41)
SCALE 1/2" = 1'-0"

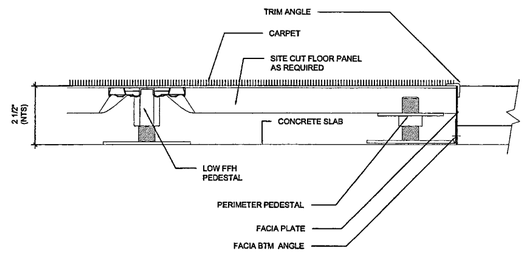

DETAIL (40)
SCALE 3" = 1'-0"

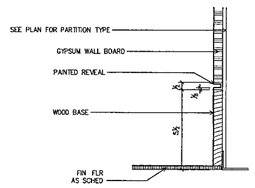

WDB – 2
WOOD BASE AT CORRIDOR (33)
SCALE 3" = 1'-0"

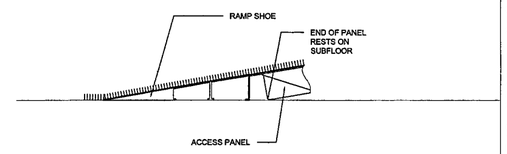

DETAIL (30)
SCALE 3" = 1'-0"

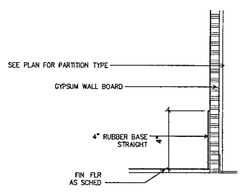

RB–1
BUBBER BASE (23)
SCALE. 3" = 1'-0"

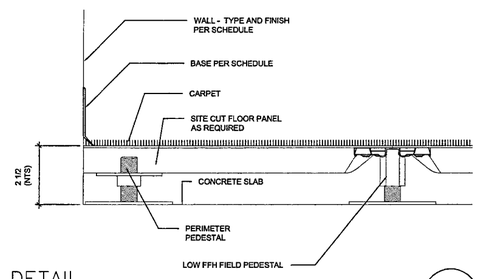

DETAIL (21)
SCALE 3" = 1'-0"

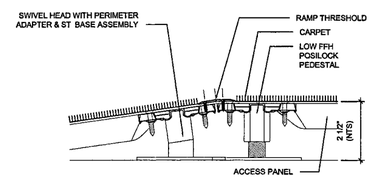

DETAIL (20)
SCALE 3" = 1'-0"

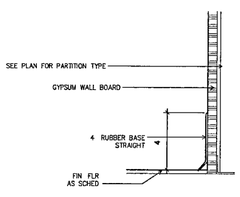

RB – 2
RUBBER BASE (13)
SCALE 3" = 1'-0"

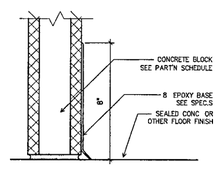

CONC – 6
EPOXY BASE (12)
SCALE 3" = 1'-0"

WILLIAM J. CLINTON PRESIDENTIAL CENTER

LITTLE ROCK, ARKANSAS

Architect

POLSHEK PARTNERSHIP LLP
320 West 13th Street
New York, New York 10014
212.807 7171

Coordinating Architects

POLK STANLEY YEARY ARCHITECTS Ltd
700 South Schiller Street
Little Rock, Arkansas 72201
501 378 0878

WITSELL EVANS RASCO
901 West Third Street
Little Rock, Arkansas 72201
501 374 5300

WOODS CARADINE ARCHITECTS
2200 South Main Street
Little Rock, Arkansas 72206
501 374 4060

Landscape Architects

HARGREAVES ASSOCIATES
118 Magazine Street
Cambridge, Massachusettes 02139
617 661 0070

LANDSCAPE ARCHITECTURE Inc
2300 Cottondale Lane Suite 202
Little Rock, Arkansas 72202
501 374 5610

Structural Engineer

LESLIE E ROBERTSON ASSOC , RLLP
30 Broad Street, 47th Floor
New York, New York 10004
212 750 9000

MEP Engineers

FLACK + KURTZ Inc.
475 Fifth Avenue
New York, New York 10017
212 532 9600

CROMWELL ARCHITECTS ENGINEERS
101 South Spring Street
Little Rock, Arkansas 72201
501 372.2900

Curtainwall Consultant

R. A HEINTGES ARCHITECTS
126 Fifth Avenue, 9th Floor
New York, New York 10011
212 652-2966

Seal

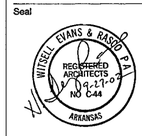

Issue	Date
100% Construction Documents	09/27/02
90% Progress Printing	06/30/02

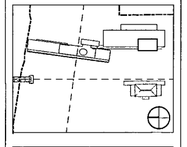

Job No 9908

Scale 3" = 1'-0"

Date September 27, 2002

Title
ARCHIVE BUILDING
INTERIOR DETAILS
FLOOR & BASE DETAILS

Sheet No
A479

FOR OFFICIAL USE ONLY

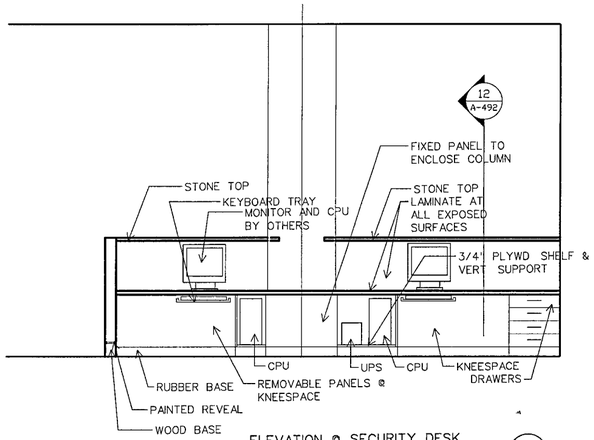

ELEVATION @ SECURITY DESK (31)

SCALE 1/2" = 1'-0"

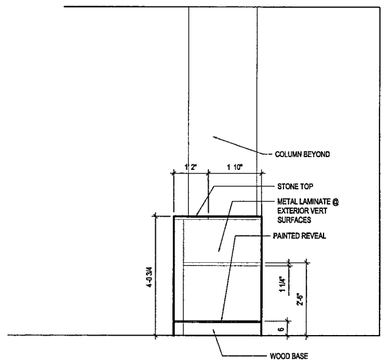

ELEVATION @ SECURITY DESK (30)

SCALE 1/2" = 1'-0"

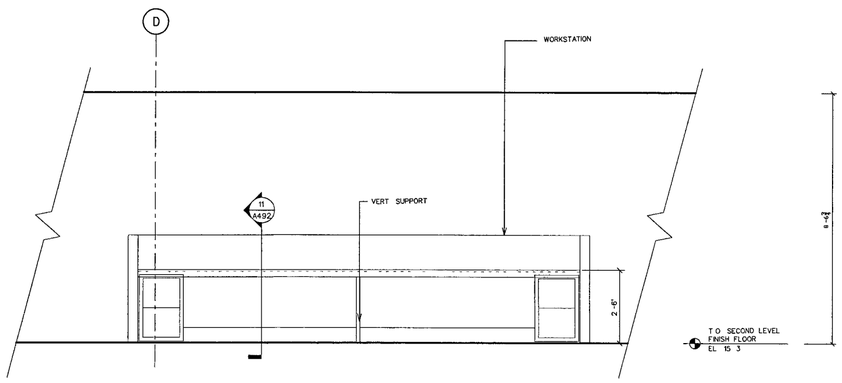

2-19 RESEARCH ROOM LOOKING SOUTH (21)

SCALE 1/2" = 1'-0"

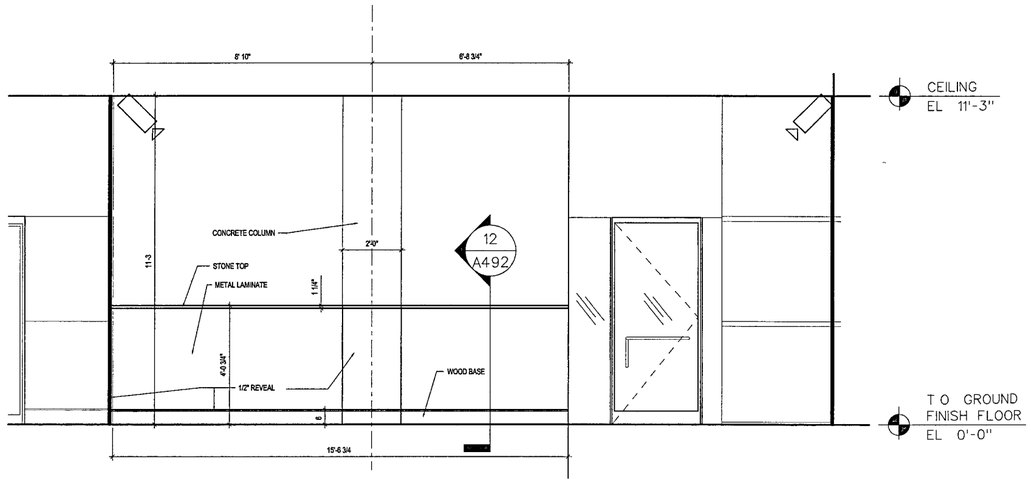

ELEVATION @ SECURITY DESK (20)

SCALE 1/2" = 1'-0"

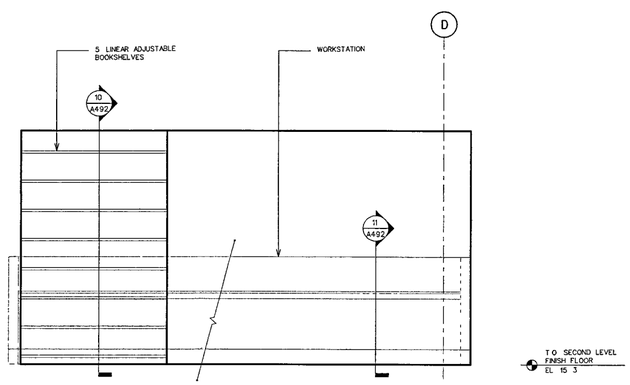

2-19 RESEARCH ROOM LOOKING NORTH (11)

SCALE 1/2" = 1'-0"

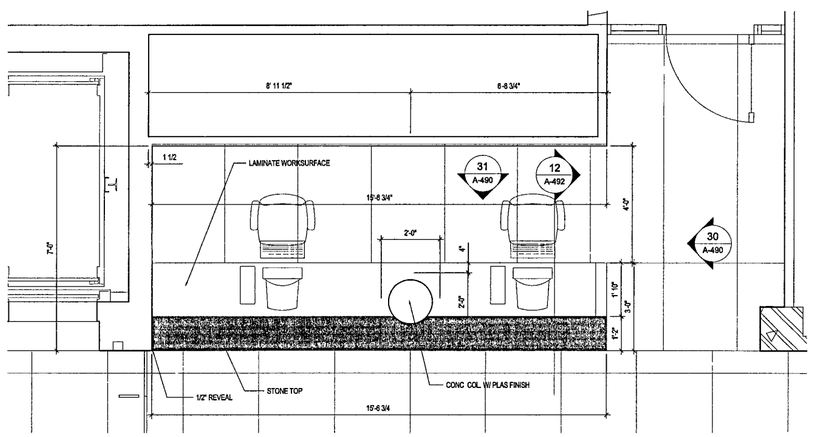

SECURITY DESK (10)

SCALE 1/2" = 1'-0"

WILLIAM J CLINTON PRESIDENTIAL CENTER

LITTLE ROCK, ARKANSAS

Architect

POLSHEK PARTNERSHIP LLP
320 West 13th Street
New York, New York 10014
212 807 7171

Coordinating Architects

POLK STANLEY YEARY ARCHITECTS Ltd
700 South Schiller Street
Little Rock, Arkansas 72201
501 378 0878

WITSELL EVANS RASCO
501 West Third Street
Little Rock, Arkansas 72201
501 374 5300

WOODS CARADINE ARCHITECTS
2200 South Main Street
Little Rock, Arkansas 72206
501 374 4060

Landscape Architects

HARGREAVES ASSOCIATES
118 Magazine Street
Cambridge, Massachusettes 02139
617 661 0070

LANDSCAPE ARCHITECTURE, Inc.
2300 Cottondale Lane Suite 202
Little Rock, Arkansas 72202
501 374.5610

Structural Engineer

LESLIE E ROBERTSON ASSOC , RLLP
30 Broad Street, 47th Floor
New York, New York 10004
212 750 9000

MEP Engineers

FLACK + KURTZ Inc.
475 Fifth Avenue
New York, New York 10017
212 532 9600

CROMWELL ARCHITECTS ENGINEERS
101 South Spring Street
Little Rock, Arkansas 72201
501 372.2900

Curtainwall Consultant

R. A. HEINTGES ARCHITECTS
125 Fifth Avenue 9th Floor
New York, New York 10011
212 652 2966

Seal

WITSELL EVANS & RASCO P.A. REGISTERED ARCHITECTS NO 1644 ARKANSAS

Issue	Date
100% Construction Documents	09/27/02
90% Progress Printing	08/30/02

Job No 9908

Scale 1/2" = 1'-0"

Date September 27 2002

Title

ARCHIVE BUILDING MILLWORK (LOBBY / RECEPTION)

Sheet No

A490

FOR OFFICIAL USE ONLY

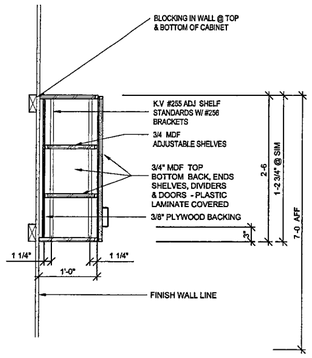

MILLWORK SECTION 35
SCALE 1" = 1'-0"

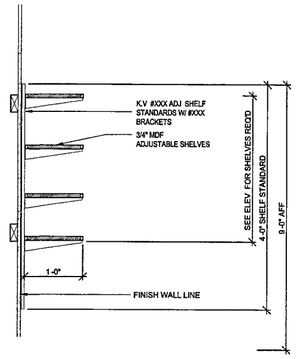

MILLWORK SECTION 34
SCALE 1" = 1'-0"

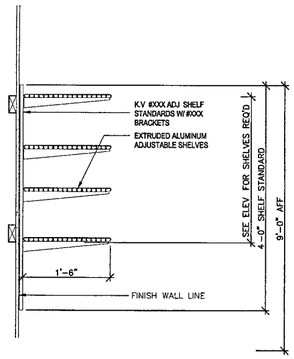

MILLWORK SECTION 33
SCALE 1" = 1'-0"

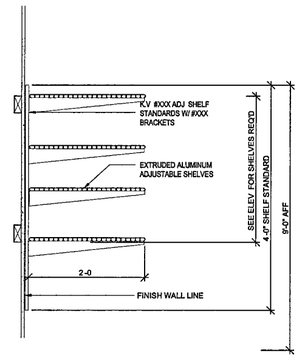

MILLWORK SECTION 32
SCALE 1" = 1'-0"

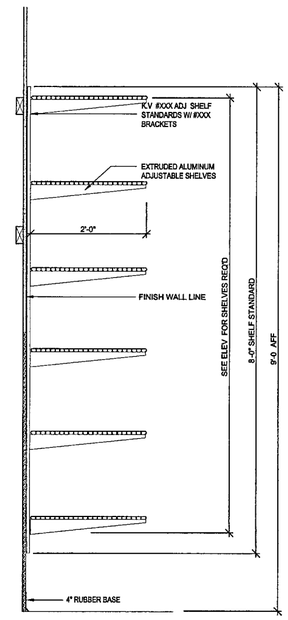

MILLWORK SECTION 31
SCALE 1" = 1'-0"

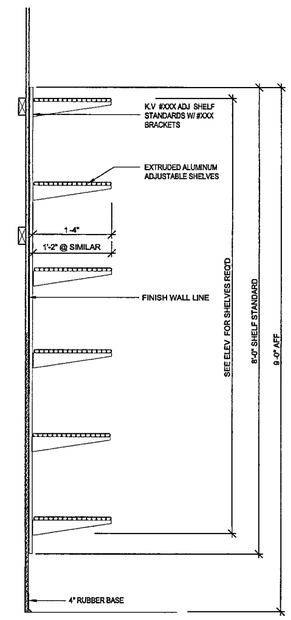

MILLWORK SECTION 30
SCALE 1" = 1'-0"

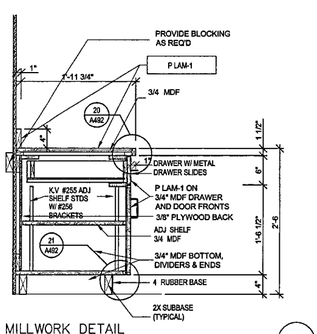

MILLWORK DETAIL 24
SCALE 3" = 1'-0"

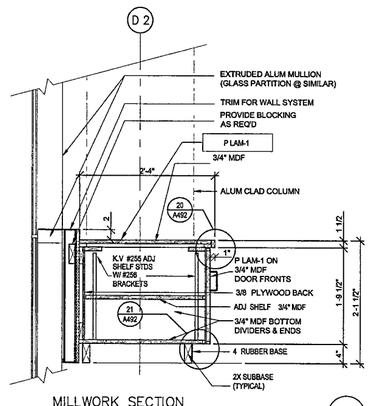

MILLWORK SECTION 23
SCALE 1" = 1'-0"

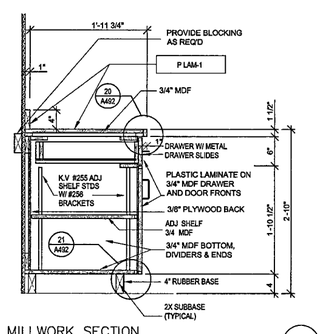

MILLWORK SECTION 22
SCALE 1" = 1'-0"

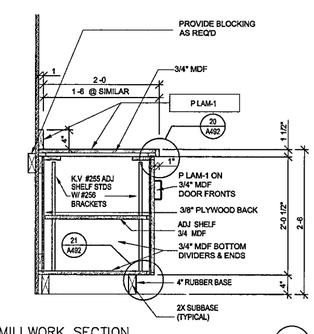

MILLWORK SECTION 21
SCALE 1" = 1'-0"

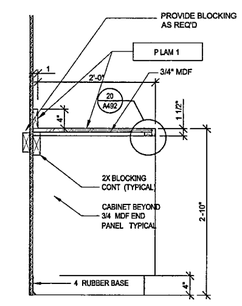

MILLWORK SECTION 20
SCALE 1" = 1'-0"

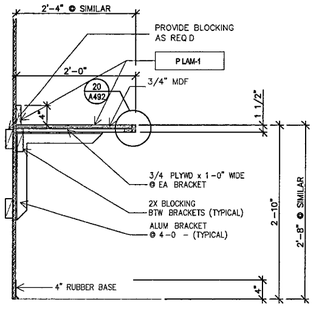

MILLWORK SECTION 14
SCALE 1" = 1'-0"

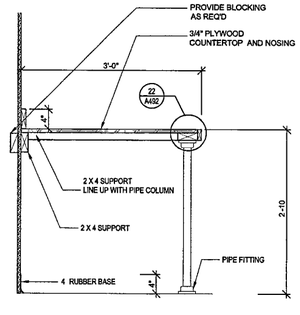

MILLWORK SECTION 13
SCALE 1" = 1'-0"

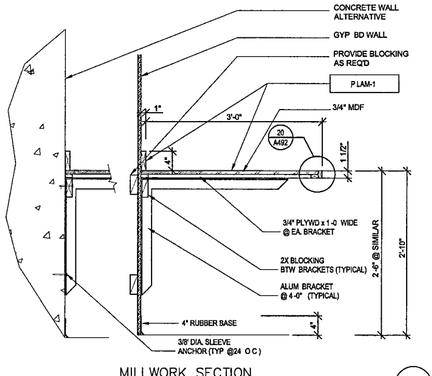

MILLWORK SECTION 12
SCALE 1" = 1'-0"

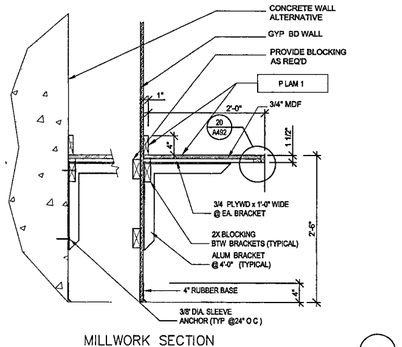

MILLWORK SECTION 11
SCALE 1" = 1'-0"

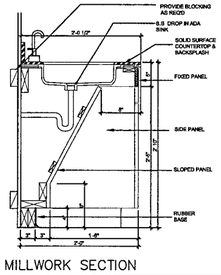

MILLWORK SECTION 10
SCALE 1" = 1'-0"

WILLIAM J. CLINTON PRESIDENTIAL CENTER

LITTLE ROCK, ARKANSAS

Architect

POLSHEK PARTNERSHIP LLP
320 West 13th Street
New York, New York 10014
212 807 7171

Coordinating Architects

POLK STANLEY YEARY ARCHITECTS Ltd
700 South Schiller Street
Little Rock, Arkansas 72201
501 376 0878

WITSELL EVANS RASCO
901 West Third Street
Little Rock, Arkansas 72201
501 374 5300

WOODS CARADINE ARCHITECTS
2200 South Main Street
Little Rock, Arkansas 72206
501 374 4060

Landscape Architects

HARGREAVES ASSOCIATES
118 Magazine Street
Cambridge, Massachusettes 02139
617 661 0070

LANDSCAPE ARCHITECTURE, Inc.
2300 Cottondale Lane Suite 202
Little Rock, Arkansas 72202
501 374 5610

Structural Engineer

LESLIE E ROBERTSON ASSOC , RLLP
30 Broad Street, 47th Floor
New York, New York 10004
212 750 9000

MEP Engineers

FLACK + KURTZ Inc.
475 Fifth Avenue
New York New York 10017
212 532 9600

CROMWELL ARCHITECTS ENGINEERS
101 South Spring Street
Little Rock, Arkansas 72201
501 372 2900

Curtainwall Consultant

R A. HEINTGES ARCHITECTS
126 Fifth Avenue, 9th Floor
New York, New York 10011
212 652-2966

Seal

WITSELL EVANS & RASCO, P.A. REGISTERED ARCHITECTS NO C44 ARKANSAS

Issue	Date
100% Construction Documents	09/27/02
90% Progress Printing	08/30/02

Job No 9908

Scale 1" = 1'-0"

Date September 27, 2002

Title MILLWORK SECTIONS ARCHIVE GROUND LEVEL

Sheet No A491

FOR OFFICIAL USE ONLY

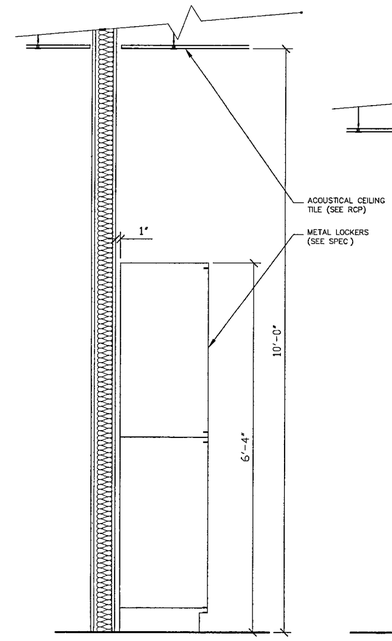

LOCKER DETAIL 32
SCALE 1" = 1'-0"

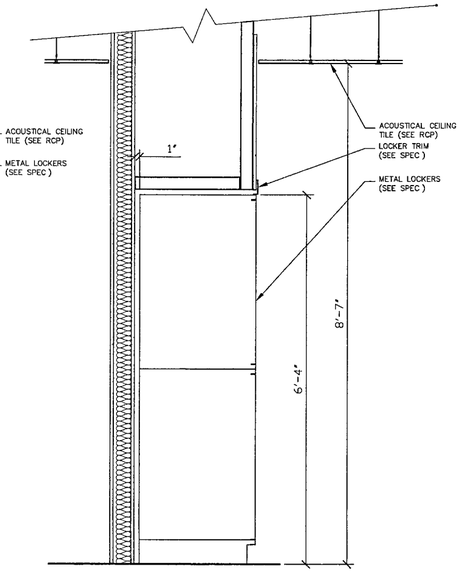

LOCKER DETAIL 31
SCALE 1" = 1'-0"

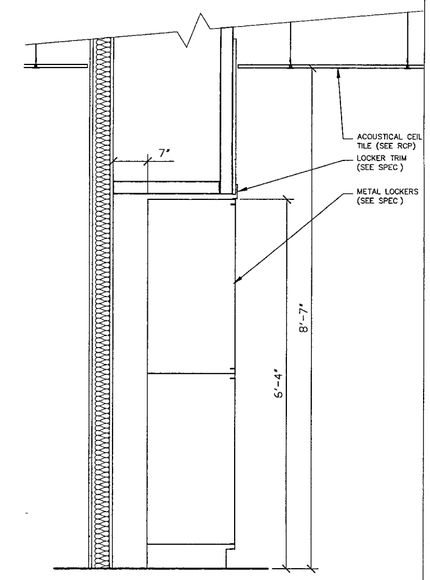

LOCKER DETAIL 30
SCALE 1" = 1'-0"

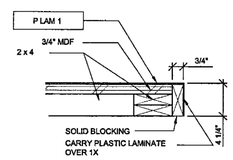

MILLWORK DETAIL 23
SCALE 3" = 1'-0"

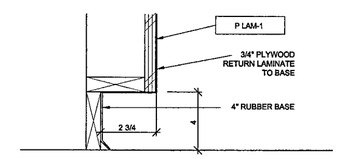

MILLWORK DETAIL 22
SCALE 3" = 1'-0"

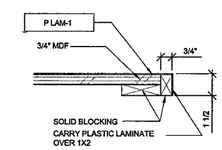

MILLWORK DETAIL 21
SCALE 3" = 1'-0"

MILLWORK DETAIL 20
SCALE 3" = 1'-0"

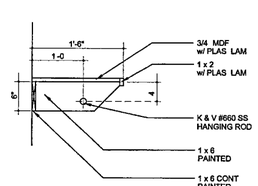

MILLWORK SECTION 13
SCALE 1" = 1'-0"

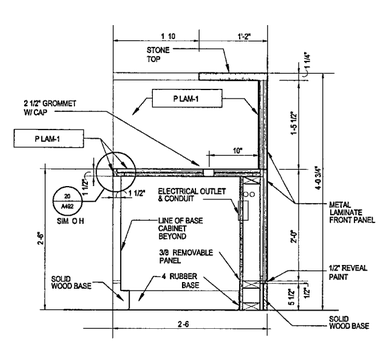

MILLWORK SECTION 12
SCALE 1" = 1'-0"

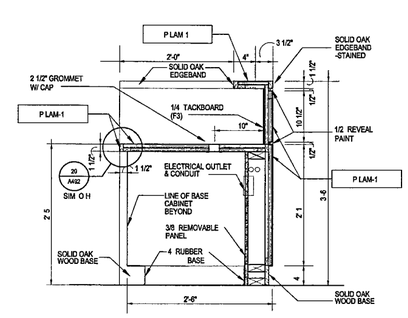

MILLWORK SECTION 11
SCALE 1" = 1'-0"

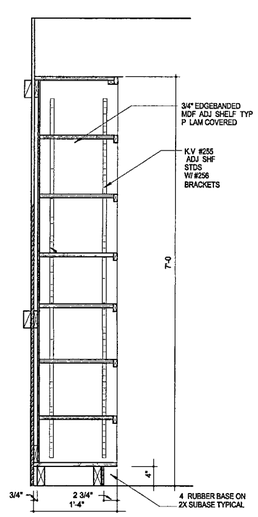

MILLWORK SECTION 10
SCALE 1" = 1'-0"

WILLIAM J. CLINTON PRESIDENTIAL CENTER

LITTLE ROCK, ARKANSAS

Architect

POLSHEK PARTNERSHIP LLP
320 West 13th Street
New York, New York 10014
212 807 7171

Coordinating Architects

POLK STANLEY YEARY ARCHITECTS Ltd
700 South Schiller Street
Little Rock, Arkansas 72201
501 378 0878

WITSELL EVANS RASCO
901 West Third Street
Little Rock, Arkansas 72201
501 374 5300

WOODS CARADINE ARCHITECTS
2200 South Main Street
Little Rock, Arkansas 72206
501 374 4060

Landscape Architects

HARGREAVES ASSOCIATES
118 Magazine Street
Cambridge, Massachusettes 02139
617 661 0070

LANDSCAPE ARCHITECTURE, Inc
2300 Cottondale Lane Suite 202
Little Rock, Arkansas 72202
501 374 5610

Structural Engineer

LESLIE E ROBERTSON ASSOC , RLLP
30 Broad Street, 47th Floor
New York, New York 10004
212 750 9000

MEP Engineers

FLACK + KURTZ Inc
475 Fifth Avenue
New York, New York 10017
212 532 9600

CROMWELL ARCHITECTS ENGINEERS
101 South Spring Street
Little Rock, Arkansas 72201
501 372.2900

Curtainwall Consultant

R. A. HEINTGES ARCHITECTS
126 Fifth Avenue 9th Floor
New York, New York 10011
212 652-2966

Seal

WITSELL EVANS & RASCO P.A. REGISTERED ARCHITECTS NO C-44 ARKANSAS

Issue	Date
100% Construction Documents	09/27/02
90% Progress Printing	08/30/02

Job No 9908

Scale 1" = 1'-0"

Date September 27, 2002

Title
MILLWORK SECTIONS
ARCHIVE
UPPER LEVELS

Sheet No
A492

FOR OFFICIAL USE ONLY

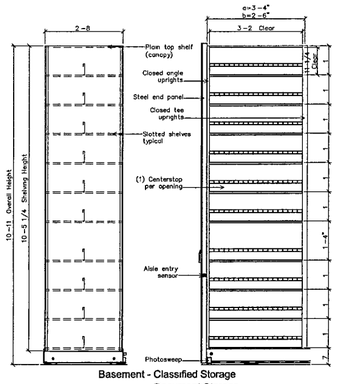

Basement - Classified Storage
- Document Storage
- Restricted Cage

COMPACT STORAGE – TYPE "1" (31)

SCALE 1/4" = 1'-0"

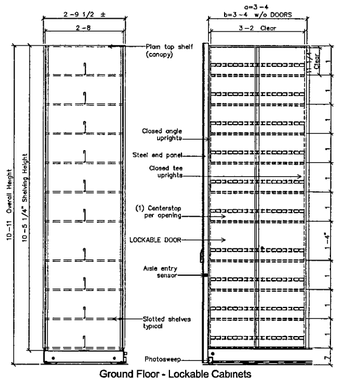

Ground Floor - Lockable Cabinets

COMPACT STORAGE – TYPE "2" (30)

SCALE 1/4" = 1'-0"

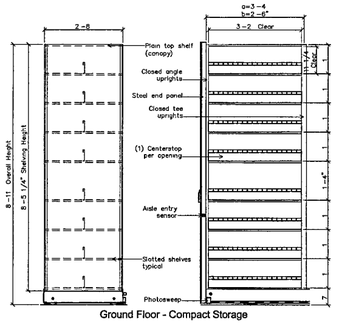

Ground Floor - Compact Storage

COMPACT STORAGE – TYPE "3" (22)

SCALE 1/4" = 1'-0"

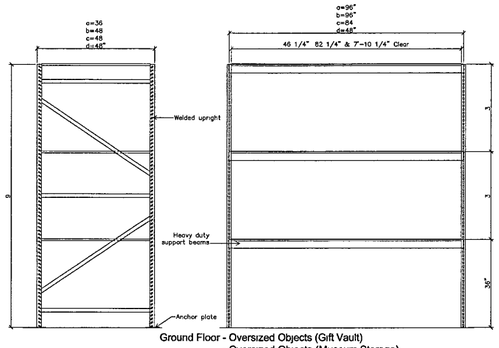

Ground Floor - Oversized Objects (Gift Vault)
- Oversized Objects (Museum Storage)

COMPACT STORAGE – TYPE "4" (21)

SCALE 1/4" = 1'-0"

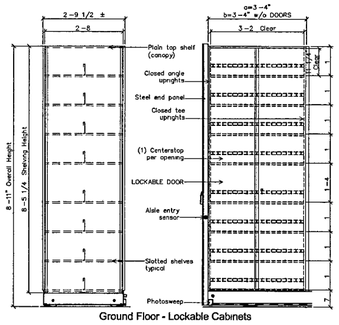

Ground Floor - Lockable Cabinets

COMPACT STORAGE – TYPE "5" (20)

SCALE. 1/4" = 1'-0"

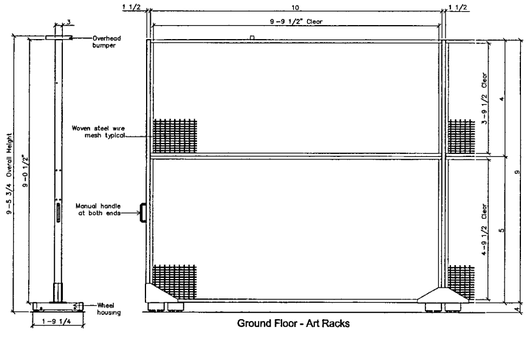

Ground Floor - Art Racks

COMPACT STORAGE – TYPE "6" (13)

SCALE. 1/4" = 1'-0"

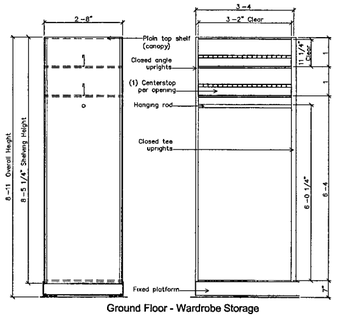

Ground Floor - Wardrobe Storage

COMPACT STORAGE – TYPE "7" (12)

SCALE 1/4" = 1'-0"

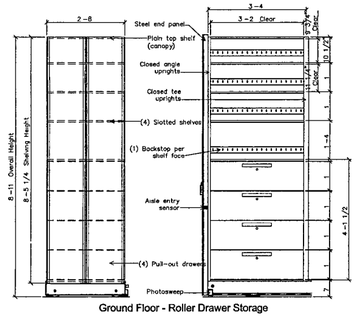

Ground Floor - Roller Drawer Storage

COMPACT STORAGE – TYPE "8" (11)

SCALE 1/4" = 1'-0"

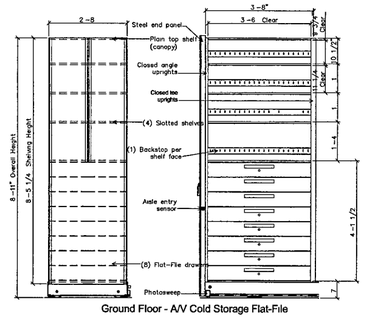

Ground Floor - A/V Cold Storage Flat-File

COMPACT STORAGE – TYPE "9" (10)

SCALE 1/4" = 1'-0"

WILLIAM J. CLINTON PRESIDENTIAL CENTER

LITTLE ROCK, ARKANSAS

Architect

POLSHEK PARTNERSHIP LLP
320 West 13th Street
New York, New York 10014
212 807 7171

Coordinating Architects

POLK STANLEY YEARY ARCHITECTS Ltd
700 South Schiller Street
Little Rock, Arkansas 72201
501 378 0878

WITSELL EVANS RASCO
901 West Third Street
Little Rock, Arkansas 72201
501 374 5300

WOODS CARADINE ARCHITECTS
2200 South Main Street
Little Rock, Arkansas 72206
501 374 4060

Landscape Architects

HARGREAVES ASSOCIATES
118 Magazine Street
Cambridge, Massachusettes 02139
617 661 0070

LANDSCAPE ARCHITECTURE, Inc
2300 Cottondale Lane Suite 202
Little Rock, Arkansas 72202
501 374 5610

Structural Engineer

LESLIE E. ROBERTSON ASSOC RLLP
30 Broad Street 47th Floor
New York, New York 10004
212 750 9000

MEP Engineers

FLACK + KURTZ Inc
475 Fifth Avenue
New York, New York 10017
212 532 9600

CROMWELL ARCHITECTS ENGINEERS
101 South Spring Street
Little Rock, Arkansas 72201
501 372.2900

Curtainwall Consultant

R. A. HEINTGES ARCHITECTS
126 Fifth Avenue, 5th Floor
New York New York 10011
212 652 2966

Seal

Issue	Date
100% Construction Documents	09/27/02
90% Progress Printing	08/30/02

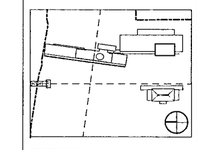

Job No 9908

Scale 1/4" = 1'-0"

Date September 27, 2002

Title
MILLWORK SECTIONS
ARCHIVE
UPPER LEVELS

Sheet No
A493

FOR OFFICIAL USE ONLY

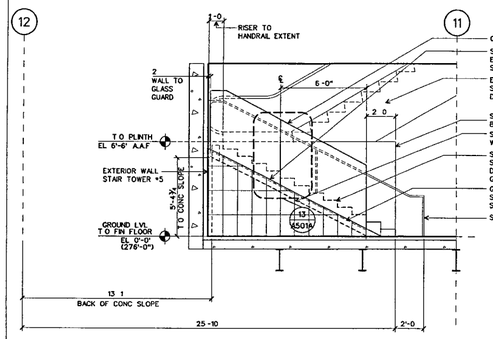

STAIR 7: ELEVATION LOOKING WEST
SCALE 1/4" =1'-0" STAIR 1 43

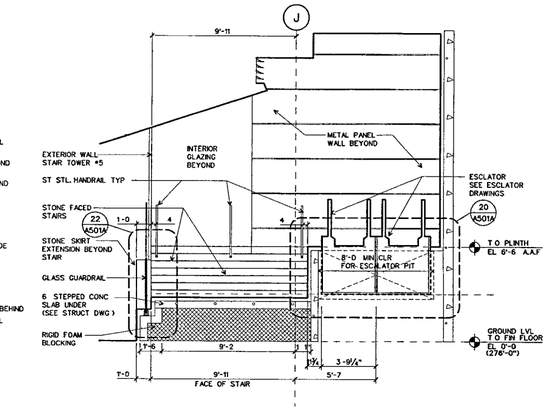

STAIR 7: E/W SECTION LOOKING SOUTH
SCALE 1/4" =1'-0" STAIR 1 42

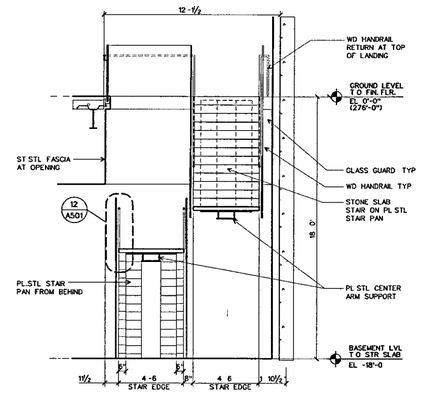

STAIR 3: E/W SECTION LOOKING NORTH
SCALE 1/4" =1'-0 STAIR 1-3-7 41

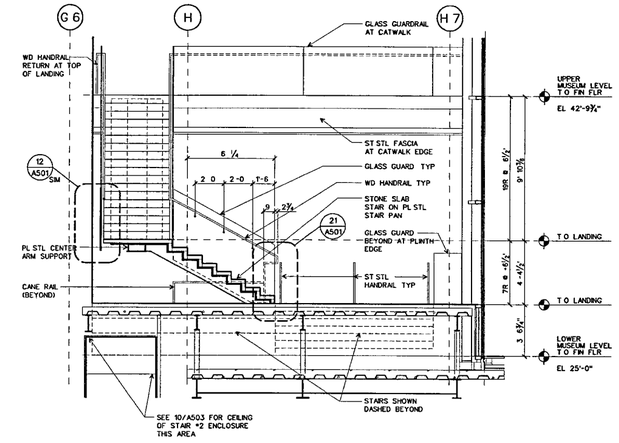

STAIR 1: E/W SECTION LOOKING SOUTH
SCALE 1/4" =1'-0 STAIR 1 40

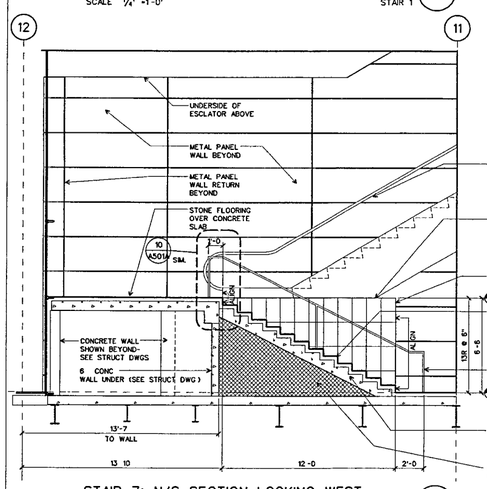

STAIR 7: N/S SECTION LOOKING WEST
SCALE 1/4" =1'-0 STAIR 1 33

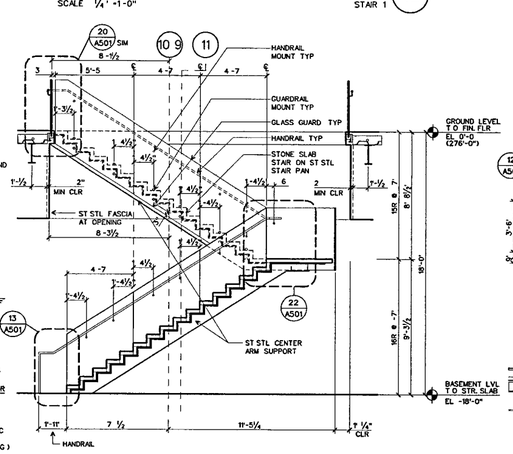

STAIR 3: N/S SECTION LOOKING EAST
SCALE 1/4" =1'-0 STAIR 1 32

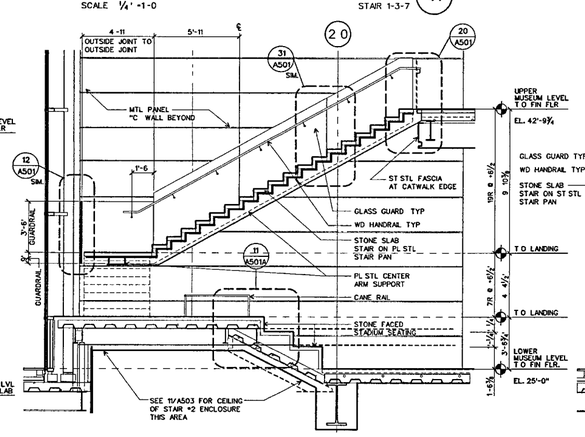

STAIR 1 N/S SECTION LOOKING EAST
SCALE 1/4" =1'-0 STAIR 1 31

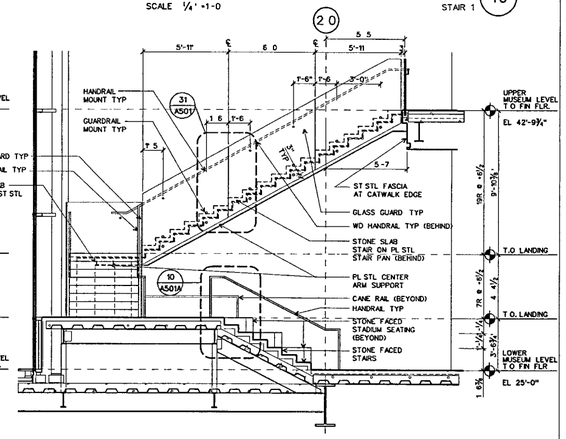

STAIR 1. N/S SECTION LOOKING EAST
SCALE 1/4" =1'-0 STAIR 1 30

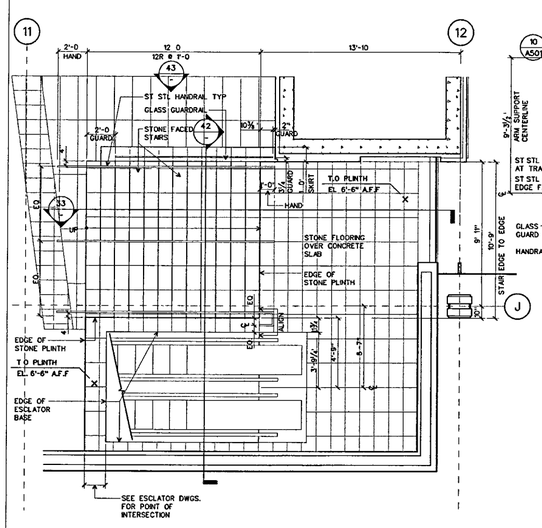

STAIR 7: GROUND LEVEL PLAN
SCALE 1/4" =1'-0" STAIR 1 13

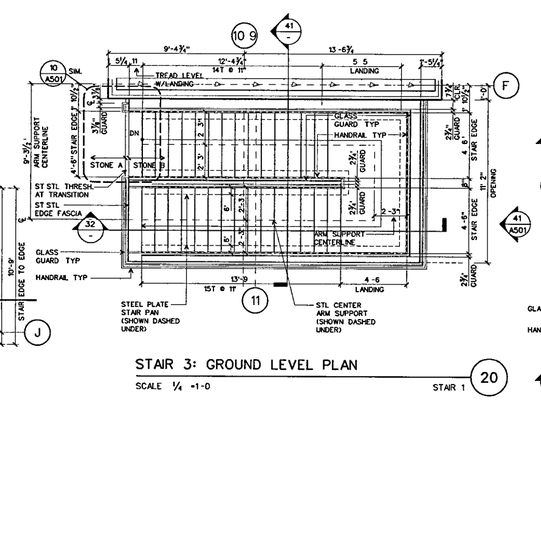

STAIR 3: GROUND LEVEL PLAN
SCALE 1/4" =1'-0 STAIR 1 20

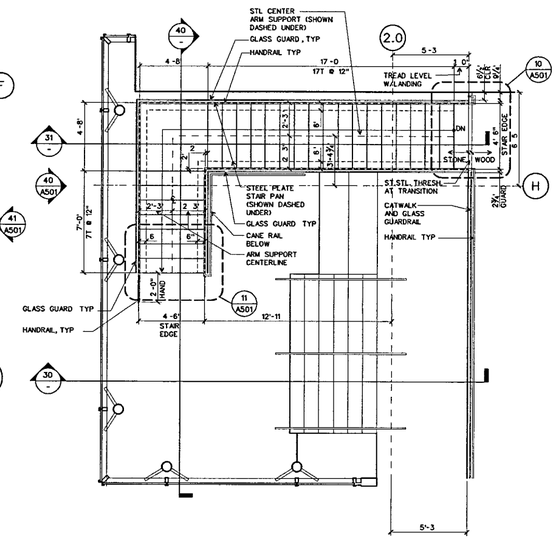

STAIR 1: MUSEUM UPPER LEVEL PLAN
SCALE 1/4" =1'-0 STAIR 1 11

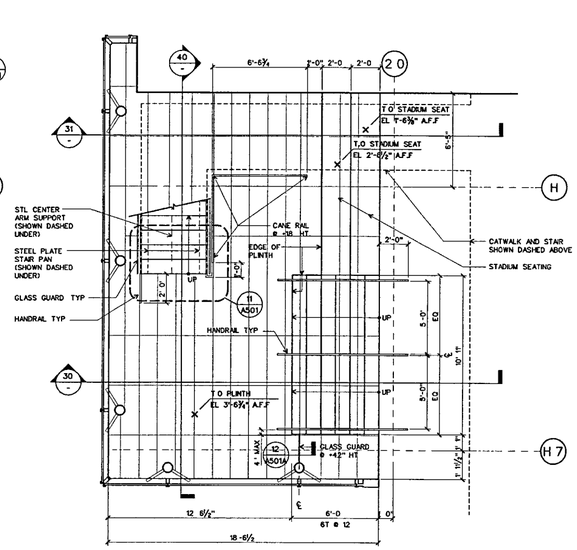

STAIR 1 MUSEUM LOWER LEVEL PLAN
SCALE 1/4" =1'-0 STAIR 1 10

WILLIAM J CLINTON PRESIDENTIAL CENTER

LITTLE ROCK, ARKANSAS

Architect

POLSHEK PARTNERSHIP LLP
320 West 13th Street
New York, New York 10014
212 807 7171

Coordinating Architects

POLK STANLEY YEARY ARCHITECTS Ltd
700 South Schiller Street
Little Rock Arkansas 72201
501 378 0878

WITSELL EVANS RASCO
901 West Third Street
Little Rock, Arkansas 72201
501 374 5300

WOODS CARADINE ARCHITECTS
2200 South Main Street
Little Rock, Arkansas 72206
501 374 4060

Landscape Architects

HARGREAVES ASSOCIATES
118 Magazine Street
Cambridge Massachusettes 02139
617 661 0070

LANDSCAPE ARCHITECTURE Inc.
2300 Cottondale Lane Suite 202
Little Rock, Arkansas 72202
501 374.5810

Structural Engineer

LESLIE E. ROBERTSON ASSOC., RLLP
30 Broad Street, 47th Floor
New York, New York 10004
212 750 9000

MEP Engineers

FLACK + KURTZ Inc.
475 Fifth Avenue
New York, New York 10017
212.532 9600

CROMWELL ARCHITECTS ENGINEERS
101 South Spring Street
Little Rock, Arkansas 72201
501 372 2900

Curtainwall Consultant

R. A. HEINTGES ARCHITECTS
126 Fifth Avenue 9th Floor
New York, New York 10011
212.652-2966

Seal

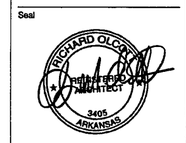

Issue	Date
100% Construction Documents	09/27/02
90% Progress Printing	08/30/02
100% Struct./ CD Progress	07/01/02
Bridge Bldg Substructure	06/14/02
100% Steel & Concrete CD & Architectural CD Progress	05/15/02
100% Design Development	03/01/02

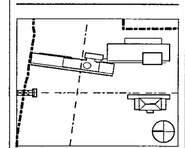

Job No 9908

Scale 1/2"=1'-0"

Date September 27, 2002

Title MUSEUM BUILDING ORNAMENTAL STAIR PLANS AND SECTIONS 1/3/7

Sheet No A500

FOR OFFICIAL USE ONLY

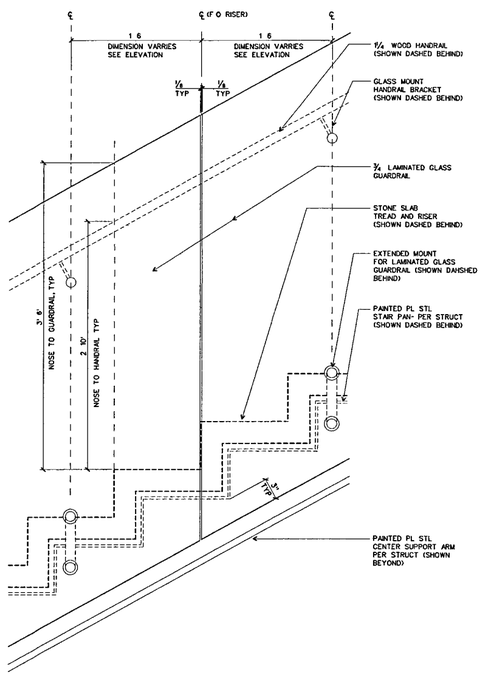

STAIR 1 (STAIR 3 SIM.): SECTION AT GUARD — 23
SCALE 1/2" =1-0 — DTL-STAIR-1-3-7

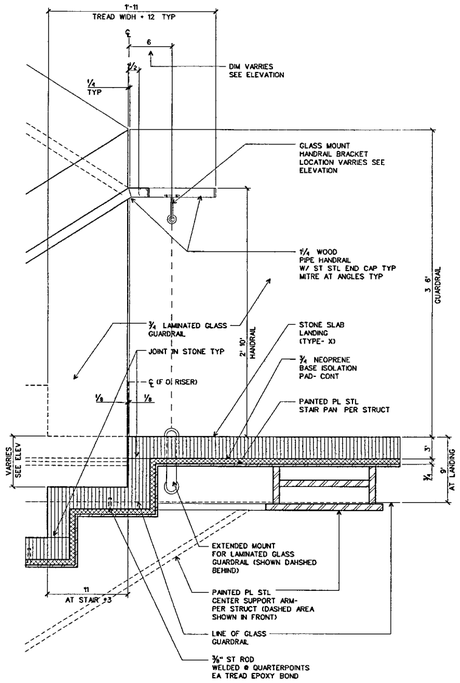

STAIR 1 (STAIR 3 SIM.): SECTION AT LANDING — 22
SCALE 1/2" =1'-0" — DTL-STAIR-1-3-7

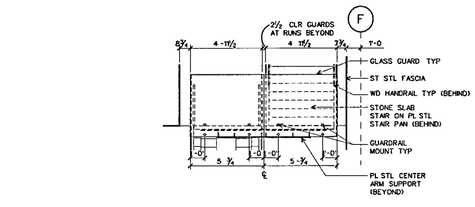

STAIR 3: PARTIAL ELEVATION- MID LANDING — 41
SCALE 1/4 =1-0 — DTL-STAIR-1 3-7

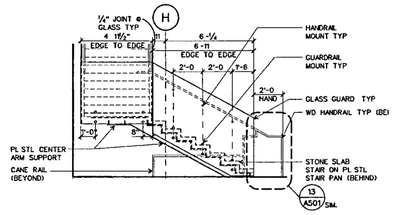

STAIR 1: PARTIAL ELEVATION- MID LANDING — 40
SCALE 1/4 =1-0 — DTL-STAIR-1-3-7

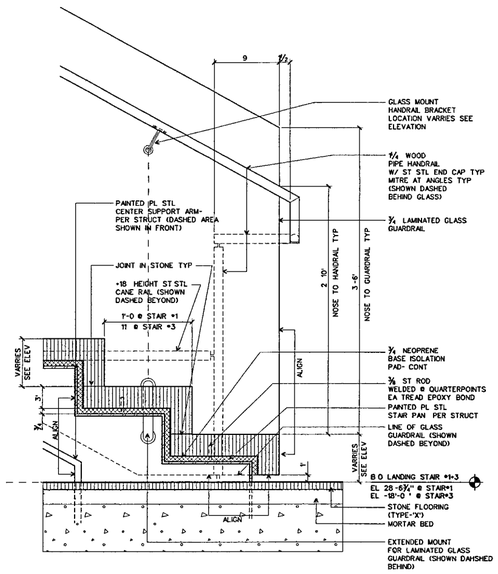

STAIR 1 (STAIR 3 SIM.): SECT. AT BOT. LAND. — 21
SCALE 1/2 =1-0 — DTL-STAIR-1-3-7

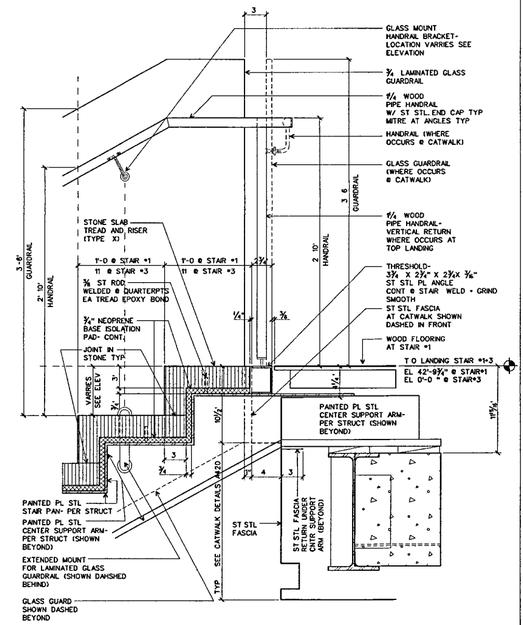

STAIR 1 (STAIR 3 SIM.): SECTION AT LANDING — 20
SCALE 1/2" =1'-0" — DTL-STAIR-1-3-7

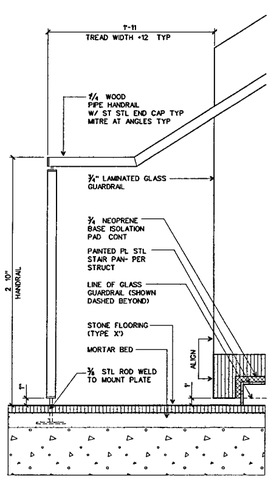

STAIR 3 (STAIR 1 SIM.). HANDRAIL AT BASE — 13
SCALE 1/2' =1-0" — DTL-STAIR-1-3-7

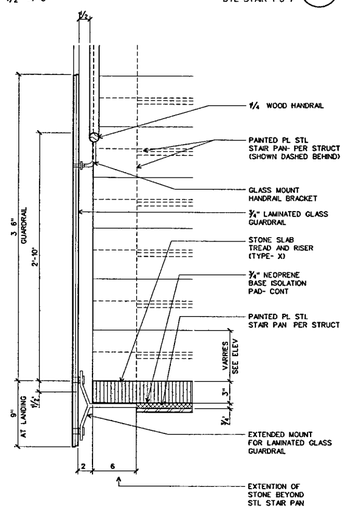

STAIR 1 (STAIR 3 SIM.): SECTION AT LANDING — 12
SCALE 1/2 =1-0 — DTL-STAIR-1-3-7

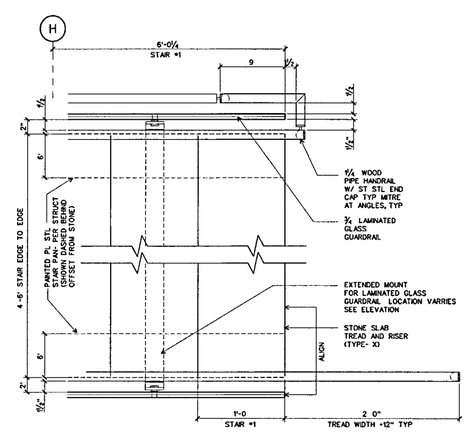

STAIR 1 (STAIR 3 SIM.). PLAN AT BOT LAND. — 11
SCALE 1/2 =1-0 — DTL-STAIR-1-3-7

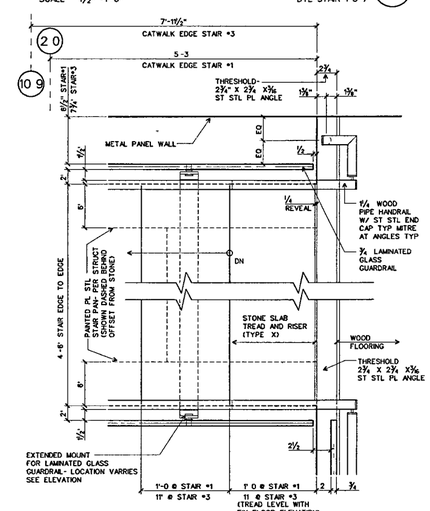

STAIR 1 (STAIR 3 SIM.): PLAN AT LANDING — 10
SCALE 1/2 =1-0" — DTL-STAIR-1-3-7

WILLIAM J CLINTON PRESIDENTIAL CENTER

LITTLE ROCK, ARKANSAS

Architect

POLSHEK PARTNERSHIP LLP
320 West 13th Street
New York, New York 10014
212.807 7171

Coordinating Architects

POLK STANLEY YEARY ARCHITECTS Ltd
700 South Schiler Street
Little Rock, Arkansas 72201
501 378 0878

WITSELL EVANS RASCO
901 West Third Street
Little Rock, Arkansas 72201
501 374 5300

WOODS CARADINE ARCHITECTS
2200 South Main Street
Little Rock, Arkansas 72206
501 374 4050

Landscape Architects

HARGREAVES ASSOCIATES
118 Magazine Street
Cambridge Massachusetts 02139
617 661 0070

LANDSCAPE ARCHITECTURE, Inc.
2300 Cottondale Lane Suite 202
Little Rock, Arkansas 72202
501 374 5610

Structural Engineer

LESLIE E. ROBERTSON ASSOC , RLLP
30 Broad Street, 47th Floor
New York, New York 10004
212 750 9000

MEP Engineers

FLACK + KURTZ Inc.
475 Fifth Avenue
New York, New York 10017
212 532 9600

CROMWELL ARCHITECTS ENGINEERS
101 South Spring Street
Little Rock, Arkansas 72201
501 372 2900

Curtainwall Consultant

R. A. HEINTGES ARCHITECTS
126 Fifth Avenue 9th Floor
New York, New York 10011
212 652-2966

Seal

Issue	Date
100% Construction Documents	09/27/02
100% Struct./ CD Progress*	07/01/02

*New Sheet. Former A501 details on A502

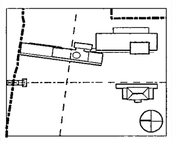

Job No 9908

Scale 1 1/2" = 1'-0"

Date September 27, 2002

Title

MUSEUM BUILDING ORNAMENTAL STAIR DETAILS

Sheet No

A501

FOR OFFICIAL USE ONLY

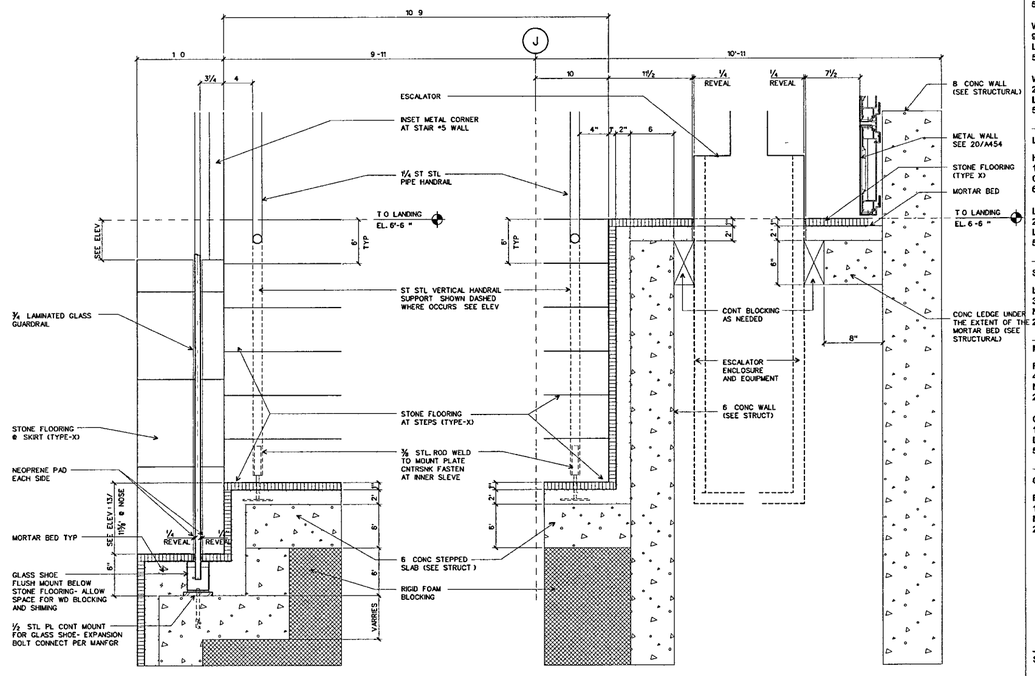

STAIR 7 : SECTION THRU ESCALATOR PLAT. (20)

SCALE 1½" =1-0"

STAIR 7- SECTION THRU SKIRT / GUARDRAIL (21)

SCALE 1½" =1-0

XXXX (22)

SCALE 1½' =1-0'

XXXX (23)

SCALE 1½ =1-0

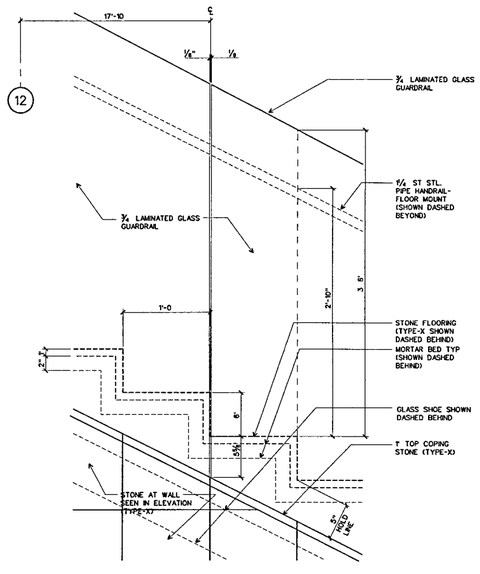

STAIR 7 : ENLARGED ELEVATION (13)

SCALE 1½ =1-0

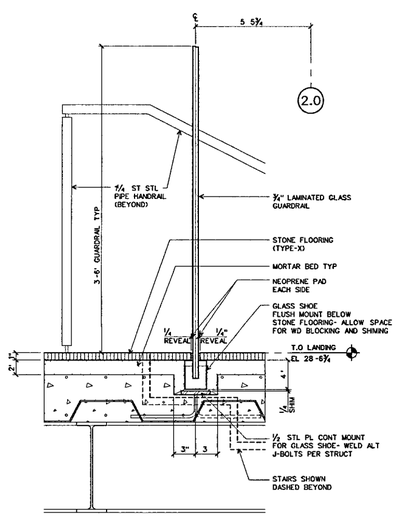

STAIR 1- GLASS RAIL AT LANDING (12)

SCALE 1½' =1-0"

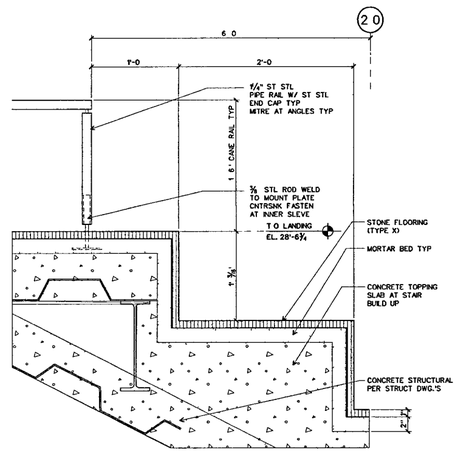

STAIR 1- STADIUM SEATING (11)

SCALE 1½" =1-0

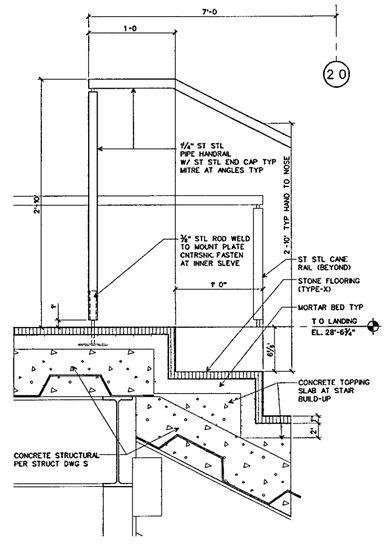

STAIR 1 (STAIR 7 SIM.)- PLAN AT LANDING (10)

SCALE 1½ =1-0"

WILLIAM J CLINTON PRESIDENTIAL CENTER

LITTLE ROCK, ARKANSAS

Architect

POLSHEK PARTNERSHIP LLP
320 West 13th Street
New York, New York 10014
212 807 7171

Coordinating Architects

POLK STANLEY YEARY ARCHITECTS Ltd
700 South Schiller Street
Little Rock, Arkansas 72201
501 378 0878

WITSELL EVANS RASCO
901 West Third Street
Little Rock, Arkansas 72201
501 374 5300

WOODS CARADINE ARCHITECTS
2200 South Main Street
Little Rock, Arkansas 72206
501 374 4060

Landscape Architects

HARGREAVES ASSOCIATES
116 Magazine Street
Cambridge, Massachusettes 02139
617 661 0070

LANDSCAPE ARCHITECTURE, Inc.
2300 Cottondale Lane Suite 202
Little Rock, Arkansas 72202
501 374 5810

Structural Engineer

LESLIE E ROBERTSON ASSOC , RLLP
30 Broad Street, 47th Floor
New York New York 10004
212 750 9000

MEP Engineers

FLACK + KURTZ Inc.
475 Fifth Avenue
New York, New York 10017
212 532 9600

CROMWELL ARCHITECTS ENGINEERS
101 South Spring Street
Little Rock Arkansas 72201
501 372 2900

Curtainwall Consultant

R A. HEINTGES ARCHITECTS
125 Fifth Avenue 9th Floor
New York, New York 10011
212 652-2966

Seal

Issue	Date
100% Construction Documents	09/27/02

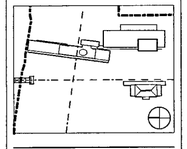

Job No 9908

Scale 1 1/2" = 1'-0"

Date September 27, 2002

Title

MUSEUM BUILDING ORNAMENTAL STAIR DETAILS

Sheet No

A501a

FOR OFFICIAL USE ONLY

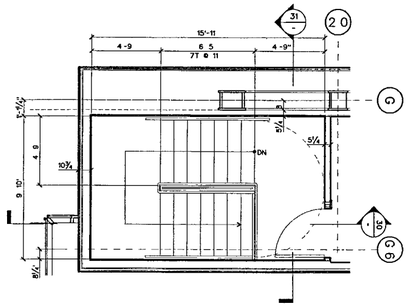

STAIR 2: MUSEUM UPPER LEVEL PLAN (41)
SCALE 1/4" = 1-0" STAIR 2

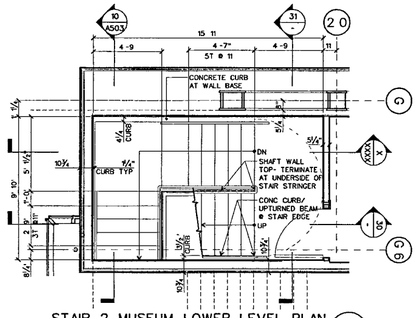

STAIR 2 MUSEUM LOWER LEVEL PLAN (40)
SCALE 1/4" = 1-0" STAIR 2

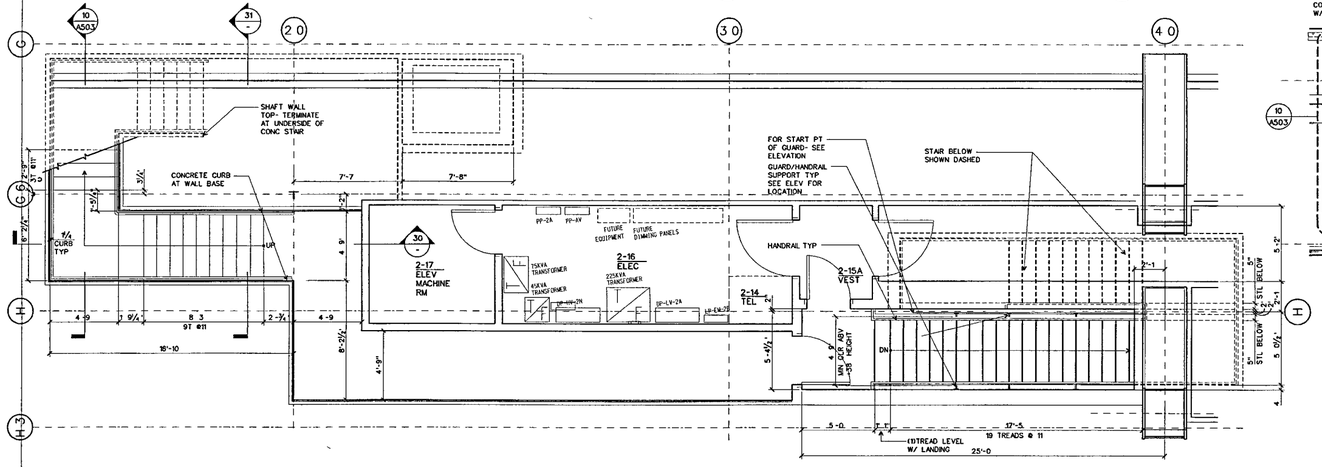

STAIR 2 SECOND LEVEL PLAN (32)
SCALE 1/4" = 1-0" STAIR 2

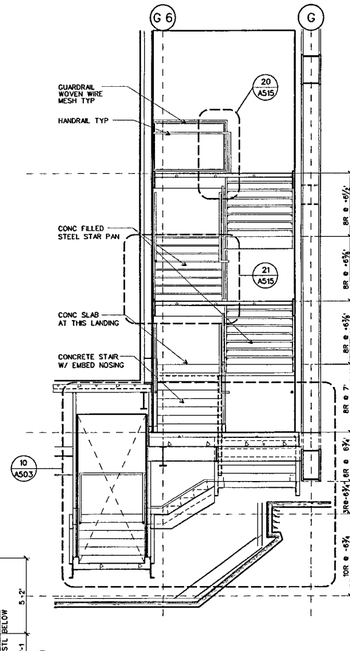

STAIR 2: E/W SECTION LOOKING NORTH (31)
SCALE 1/4" = 1'-0" STAIR 2

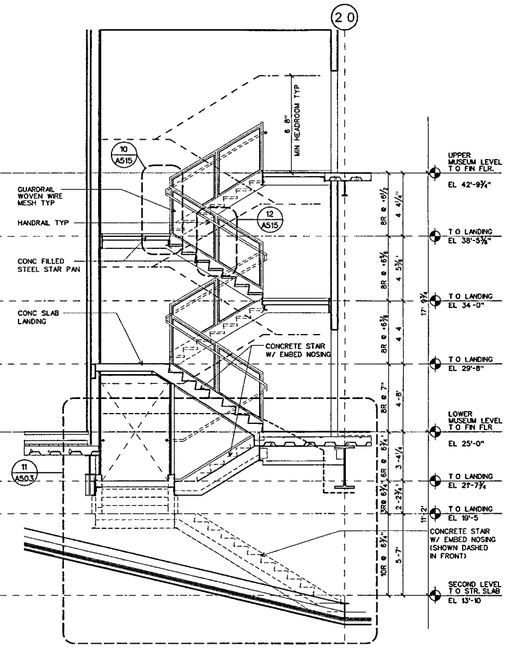

STAIR 2: N/S SECTION LOOKING EAST (30)
SCALE 1/4" = 1-0 STAIR 2

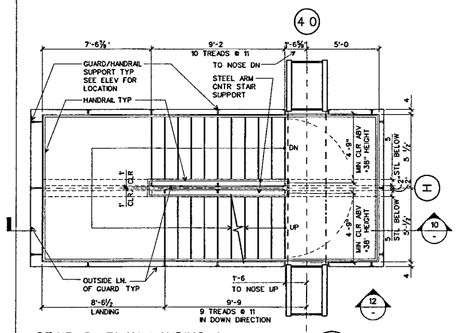

STAIR 2: PLAN LANDING 1 (21)
SCALE 1/4" = 1-0 STAIR 2

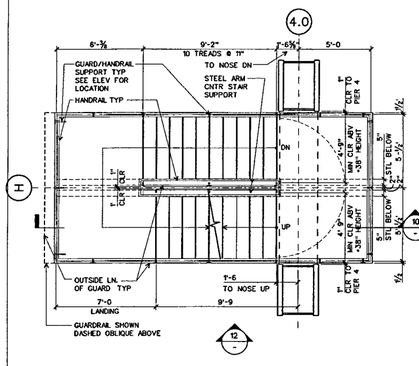

STAIR 2: PLAN LANDING 2 (14)
SCALE 1/4" = 1'-0" STAIR 2

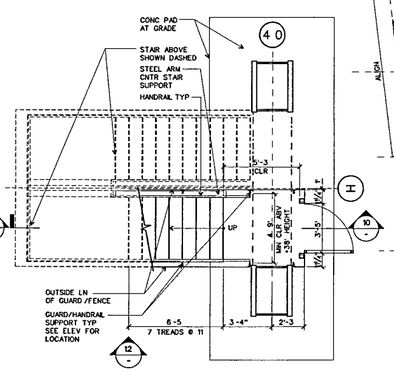

STAIR 2: PLAN LANDING 3 (13)
SCALE 1/4" = 1'-0" STAIR 2

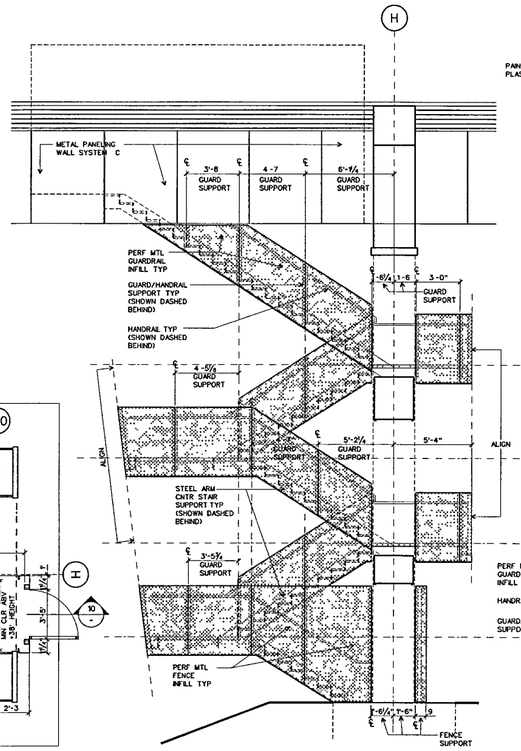

STAIR 2: ELEVATION (12)
SCALE 1/4" = 1'-0" STAIR 2

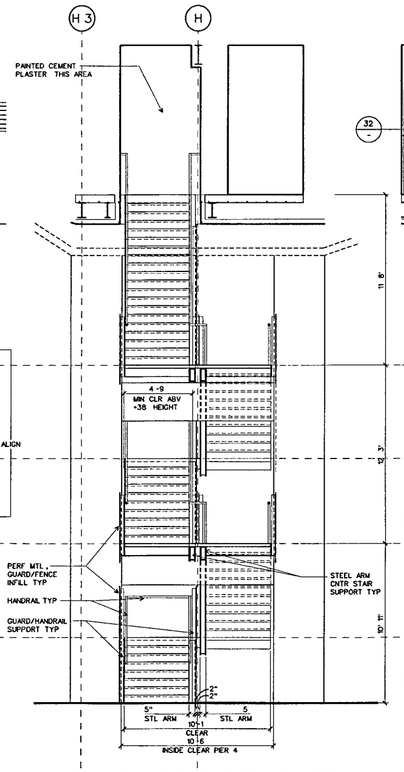

STAIR 2: E/W SECTION LOOKING NORTH (11)
SCALE 1/4" = 1'-0 stair 2

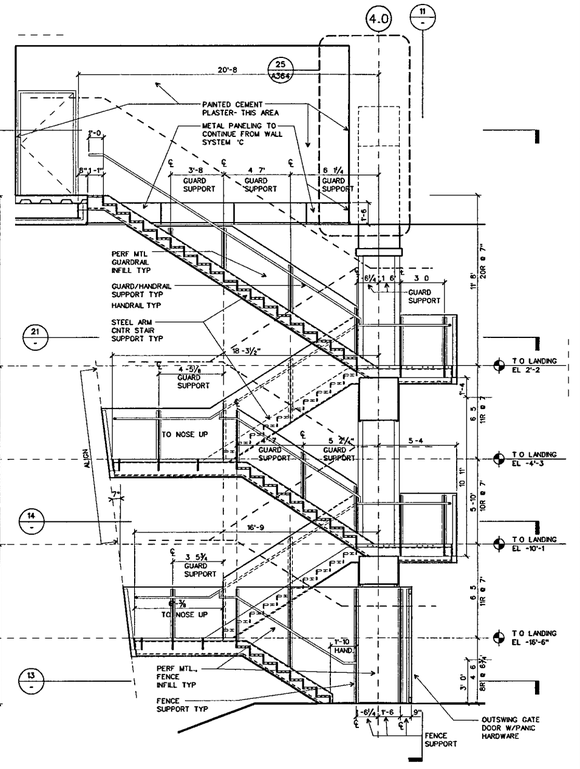

STAIR 2: N/S SECTION LOOKING EAST (10)
SCALE 1/4" = 1-0" stair 2

WILLIAM J CLINTON PRESIDENTIAL CENTER

LITTLE ROCK, ARKANSAS

Architect
POLSHEK PARTNERSHIP LLP
320 West 13th Street
New York, New York 10014
212 807 7171

Coordinating Architects
POLK STANLEY YEARY ARCHITECTS Ltd
700 South Schiller Street
Little Rock, Arkansas 72201
501 378 0878

WITSELL EVANS RASCO
901 West Third Street
Little Rock, Arkansas 72201
501 374 5300

WOODS CARADINE ARCHITECTS
2200 South Main Street
Little Rock, Arkansas 72206
501 374 4060

Landscape Architects
HARGREAVES ASSOCIATES
118 Magazine Street
Cambridge, Massachusettes 02139
617 661 0070

LANDSCAPE ARCHITECTURE, Inc.
2300 Cottondale Lane Suite 202
Little Rock, Arkansas 72202
501 374 5610

Structural Engineer
LESLIE E ROBERTSON ASSOC RLLP
30 Broad Street, 47th Floor
New York, New York 10004
212.750 9000

MEP Engineers
FLACK + KURTZ Inc.
475 Fifth Avenue
New York, New York 10017
212 532.9600

CROMWELL ARCHITECTS ENGINEERS
101 South Spring Street
Little Rock, Arkansas 72201
501 372 2900

Curtainwall Consultant
R A. HEINTGES ARCHITECTS
126 Fifth Avenue 9th Floor
New York, New York 10011
212 852-2966

Seal

Issue	Date
100% Construction Documents	09/27/02
90% Progress Printing	08/30/02
100% Struct./ CD Progress	07/01/02
Bridge Bldg Substructure	06/14/02
100% Steel & Concrete CD	05/15/02
& Architectural CD Progress	
100% Design Development*	03/01/02

*Issued ong A501/Former A502 dtls on A505

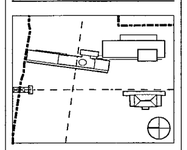

Job No 9908

Scale 1/4"=1'-0"

Date September 27, 2002

Title
MUSEUM BUILDING
STAIR 2
PLANS AND SECTIONS

Sheet No
A502

FOR OFFICIAL USE ONLY

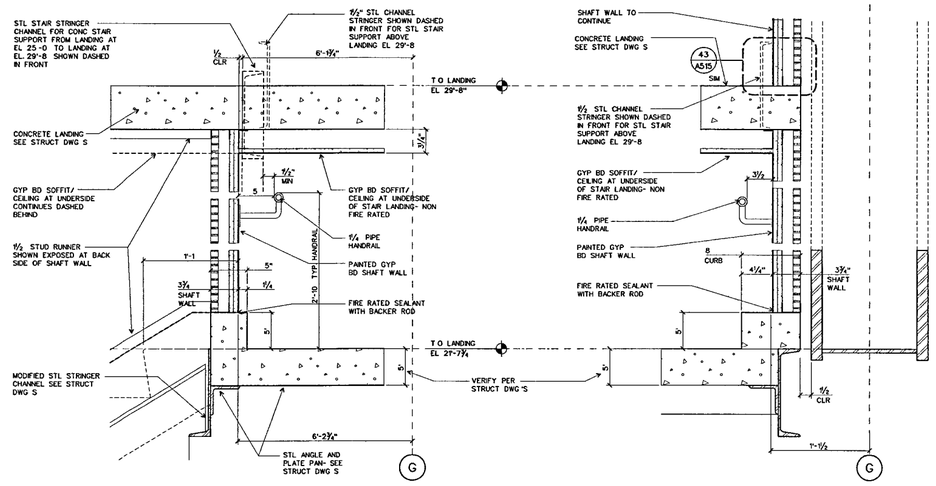

SECTION DETAIL AT WALL — 33
1½" = 1'-0"

SECTION DETAIL AT CURB — 32
1½" = 1'-0"

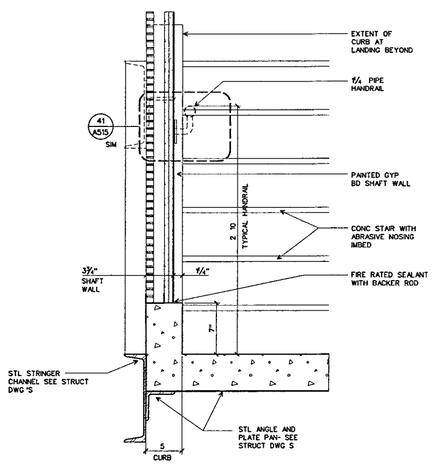

SECTION DETAIL AT WALL, TYPICAL — 23
1½" = 1'-0"

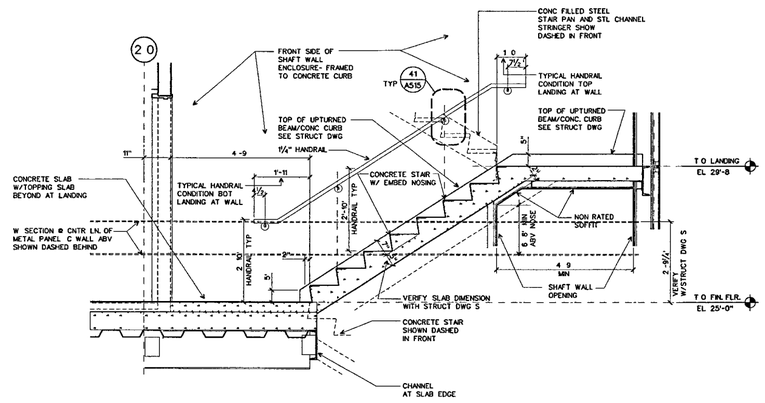

STAIR 2- N/S SECTION LOOKING WEST — 21
SCALE ½" = 1'-0"

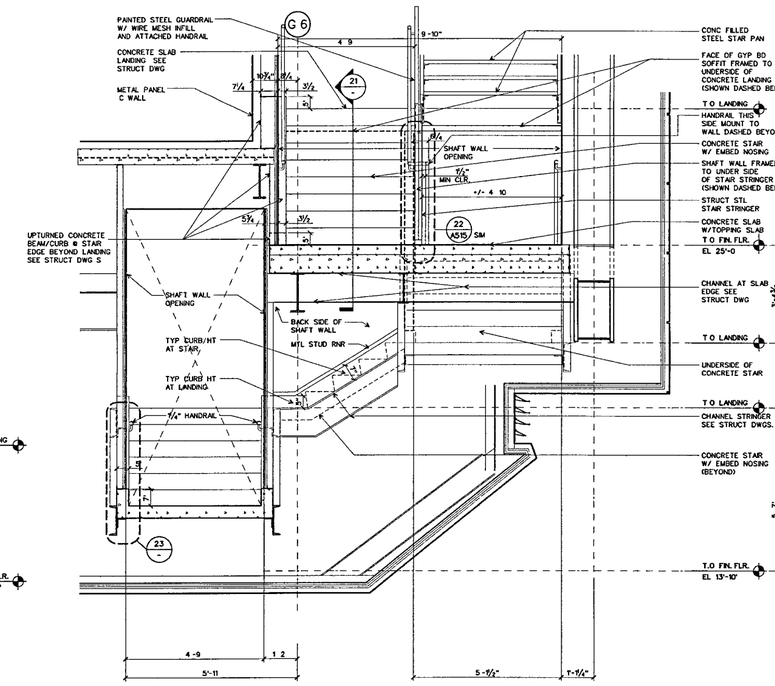

STAIR 2: E/W SECTION LOOKING NORTH — 20
SCALE ½" = 1'-0"

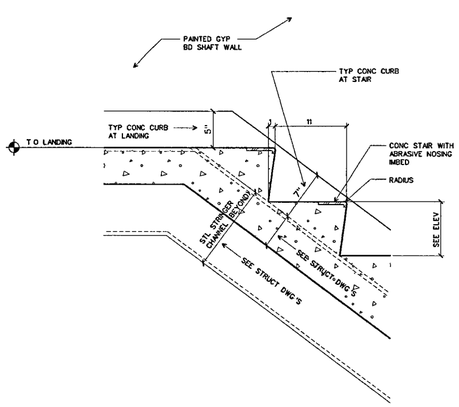

SECTION DETAIL THRU STAIR — 13
1½" = 1'-0"

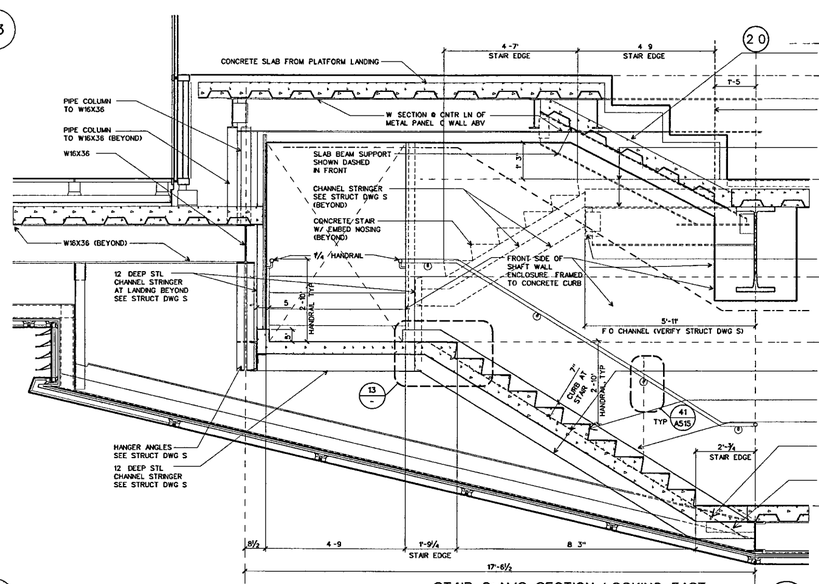

STAIR 2: N/S SECTION LOOKING EAST — 11
SCALE ½ = 1-0

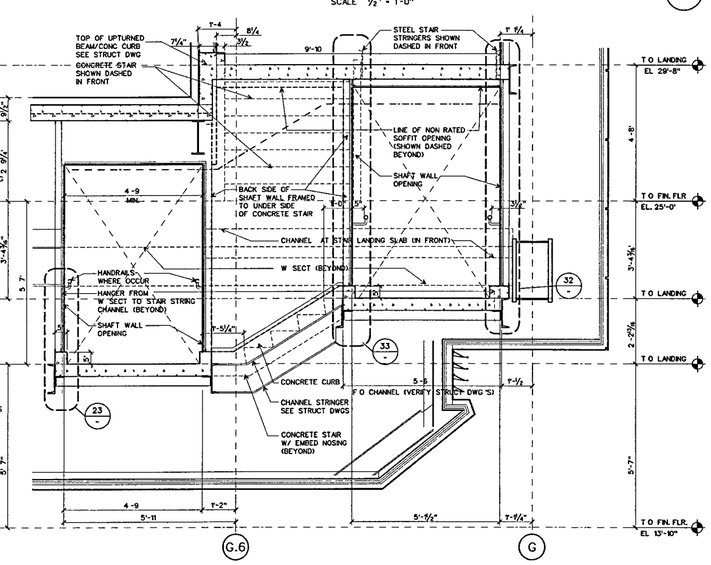

STAIR 2: E/W SECTION LOOKING NORTH — 10
SCALE ½ = 1-0

FOR OFFICIAL USE ONLY

WILLIAM J CLINTON PRESIDENTIAL CENTER

LITTLE ROCK, ARKANSAS

Architect

POLSHEK PARTNERSHIP LLP
320 West 13th Street
New York, New York 10014
212.807 7171

Coordinating Architects

POLK STANLEY YEARY ARCHITECTS Ltd
700 South Schiller Street
Little Rock, Arkansas 72201
501 378 0878

WITSELL EVANS RASCO
901 West Third Street
Little Rock, Arkansas 72201
501 374 5300

WOODS CARADINE ARCHITECTS
2200 South Main Street
Little Rock, Arkansas 72206
501 374.4060

Landscape Architects

HARGREAVES ASSOCIATES
118 Magazine Street
Cambridge Massachusetts 02139
617 661 0070

LANDSCAPE ARCHITECTURE, Inc.
2300 Cottondale Lane Suite 202
Little Rock, Arkansas 72202
501 374 5610

Structural Engineer

LESLIE E. ROBERTSON ASSOC RLLP
30 Broad Street, 47th Floor
New York, New York 10004
212.750 9000

MEP Engineers

FLACK + KURTZ Inc.
475 Fifth Avenue
New York, New York 10017
212 532.9600

CROMWELL ARCHITECTS ENGINEERS
101 South Spring Street
Little Rock, Arkansas 72201
501 372 2900

Curtainwall Consultant

R. A. HEINTGES ARCHITECTS
126 Fifth Avenue, 9th Floor
New York, New York 10011
212 652-2966

Seal

RICHARD OLCOTT REGISTERED ARCHITECT 3405 ARKANSAS

Issue	Date
100% Construction Documents	09/27/02
90% Progress Printing	08/30/02
100% Struct / CD Progress	07/01/02
100% Steel & Concrete CD	05/15/02
& Architectural CD Progress*	

*New Sheet. Former A503 details on A506

Job No 9908

Scale AS NOTED

Date September 27, 2002

Title

MUSEUM BUILDING STAIR 2 DETAILS

Sheet No

A503

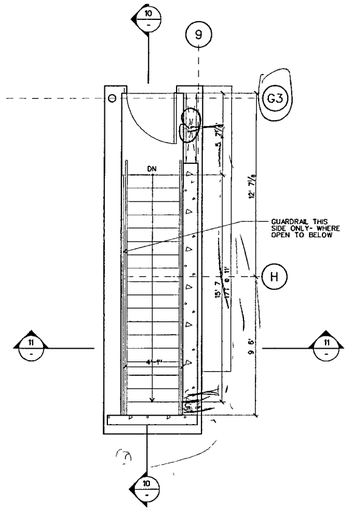

STAIR 4: EXECUTIVE LEVEL PLAN (33)
SCALE 1/4" = 1-0 PLANS/STAIR 4

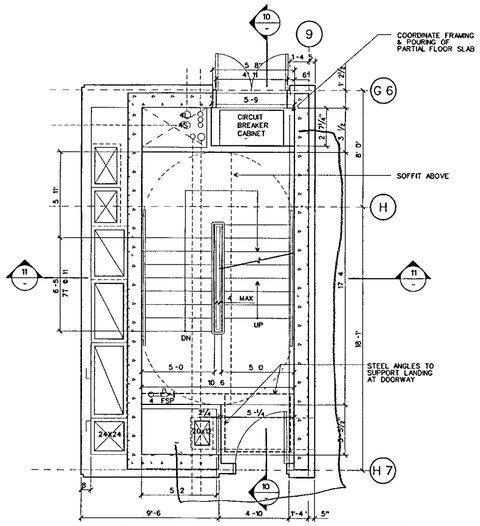

STAIR 4: UPPER MUSEUM LEVEL PLAN (32)
SCALE 1/4" = 1-0 PLANS/STAIR 4

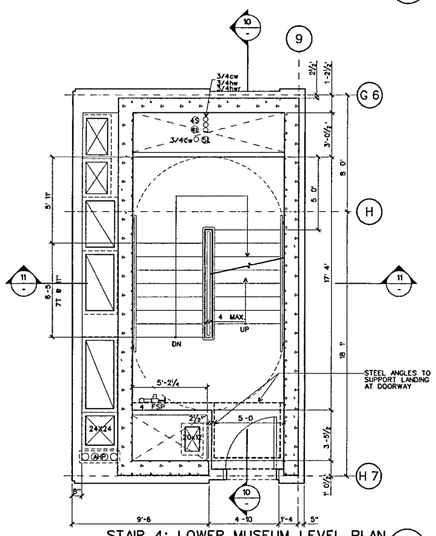

STAIR 4: LOWER MUSEUM LEVEL PLAN (23)
SCALE 1/4" = 1-0 PLANS/STAIR 4

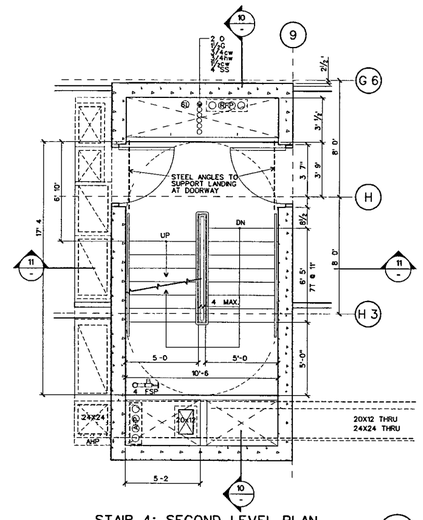

STAIR 4: SECOND LEVEL PLAN (22)
SCALE 1/4" = 1-0 PLANS/STAIR 4

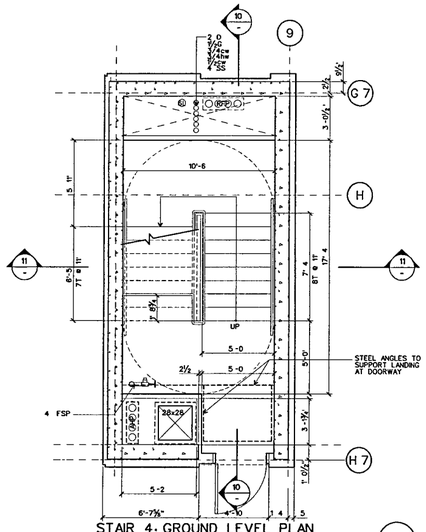

STAIR 4: GROUND LEVEL PLAN (13)
SCALE 1/4" = 1'-0" PLANS/STAIR 4

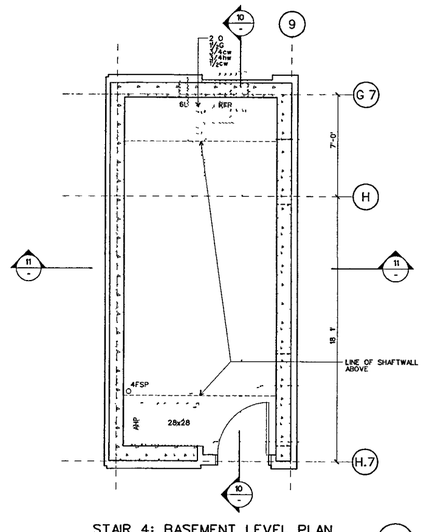

STAIR 4: BASEMENT LEVEL PLAN (12)
SCALE 1/4" = 1-0 PLANS/STAIR 4

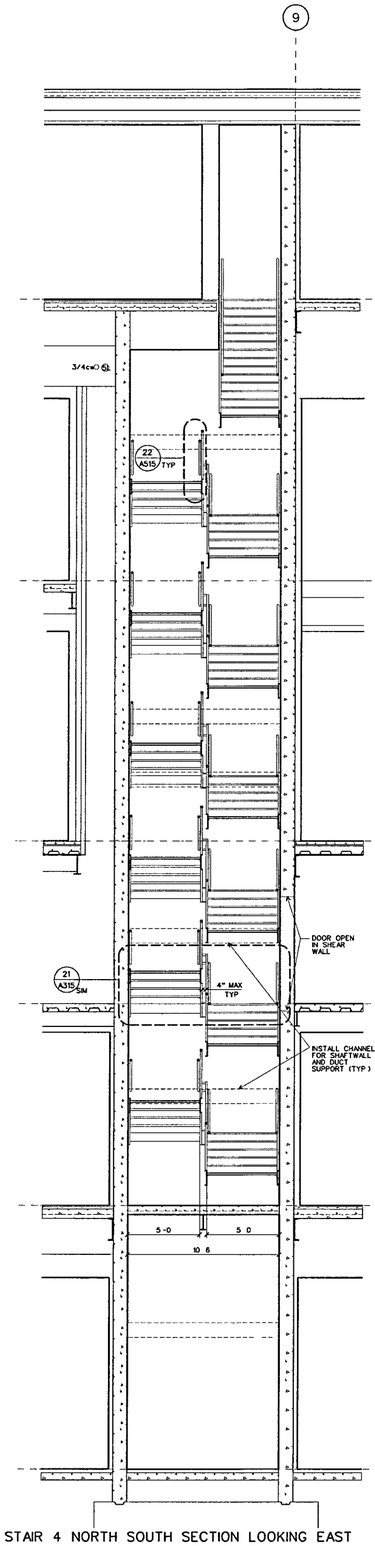

STAIR 4 NORTH SOUTH SECTION LOOKING EAST (11)
SCALE 1/4" = 1-0" PLANS/STAIR 4

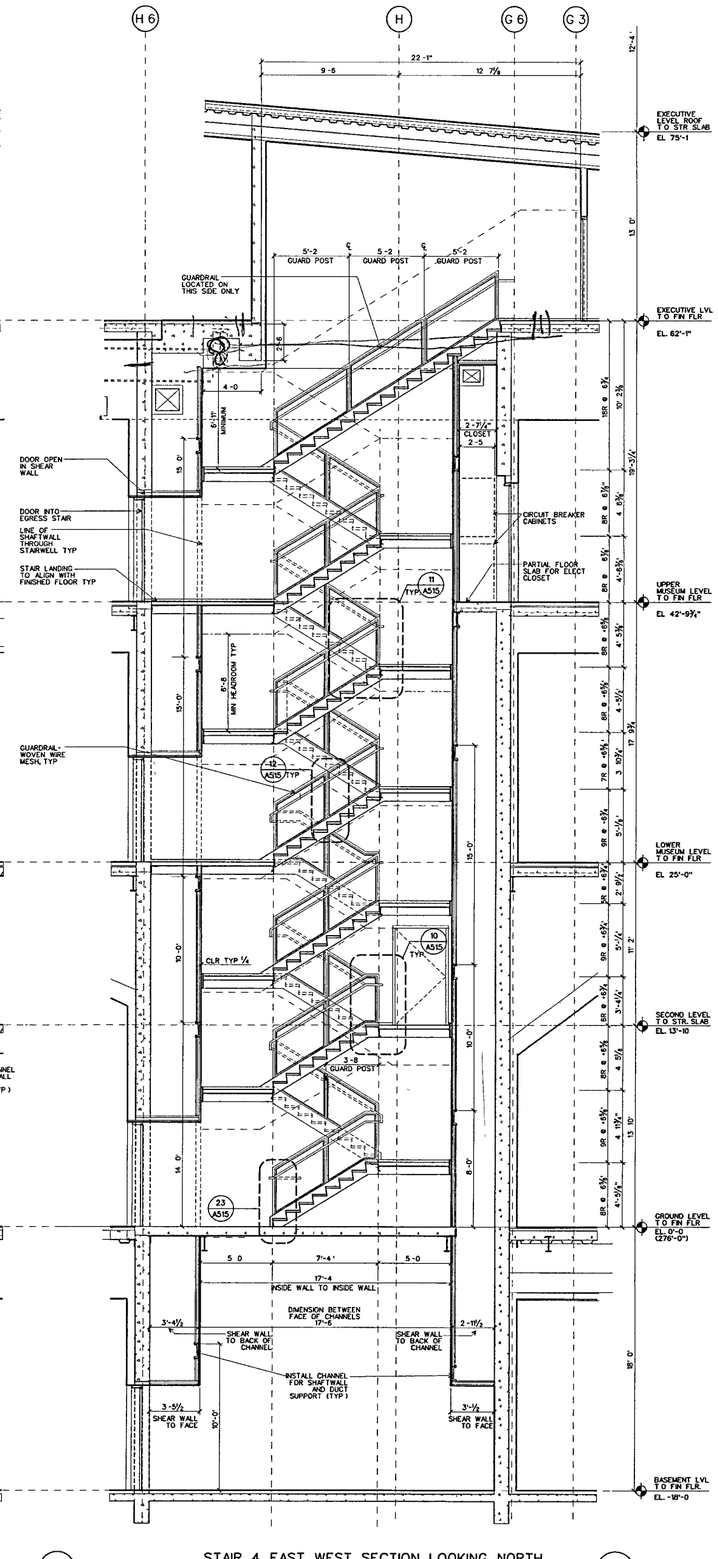

STAIR 4 EAST WEST SECTION LOOKING NORTH (10)
SCALE 1/4" = 1'-0" PLANS/STAIR 4

WILLIAM J CLINTON PRESIDENTIAL CENTER

LITTLE ROCK, ARKANSAS

Architect

POLSHEK PARTNERSHIP LLP
320 West 13th Street
New York, New York 10014
212 807 7171

Coordinating Architects

POLK STANLEY YEARY ARCHITECTS Ltd
700 South Schiller Street
Little Rock Arkansas 72201
501 378 0878

WITSELL EVANS RASCO
901 West Third Street
Little Rock Arkansas 72201
501 374 5300

WOODS CARADINE ARCHITECTS
2200 South Main Street
Little Rock Arkansas 72206
501 374 4060

Landscape Architects

HARGREAVES ASSOCIATES
118 Magazine Street
Cambridge Massachusettes 02139
617 661 0070

LANDSCAPE ARCHITECTURE, Inc
2300 Cottondale Lane Suite 202
Little Rock, Arkansas 72202
501 374 5610

Structural Engineer

LESLIE E. ROBERTSON ASSOC RLLP
30 Broad Street, 47th Floor
New York, New York 10004
212 750 9000

MEP Engineers

FLACK + KURTZ Inc.
475 Fifth Avenue
New York, New York 10017
212 532.9600

CROMWELL ARCHITECTS ENGINEERS
101 South Spring Street
Little Rock, Arkansas 72201
501 372.2900

Curtainwall Consultant

R. A. HEINTGES ARCHITECTS
126 Fifth Avenue, 9th Floor
New York, New York 10011
212 652-2966

Seal

RICHARD OLCOTT REGISTERED ARCHITECT 2405 ARKANSAS

Issue	Date
100% Construction Documents	09/27/02
90% Progress Printing	09/30/02
100% Struct./ CD Progress	07/01/02
Bridge Bldg Substructure	06/14/02
100% Steel & Concrete CD	05/15/02
& Architectural CD Progress	
100% Design Development*	03/01/02

*Issued orig A502/Former A505 dtls on A510

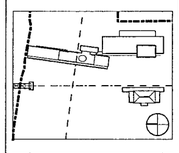

Job No. 9908

Scale 1/4"=1'-0"

Date September 27 2002

Title

MUSEUM BUILDING STAIR 4 PLANS AND SECTIONS

Sheet No

A505

FOR OFFICIAL USE ONLY

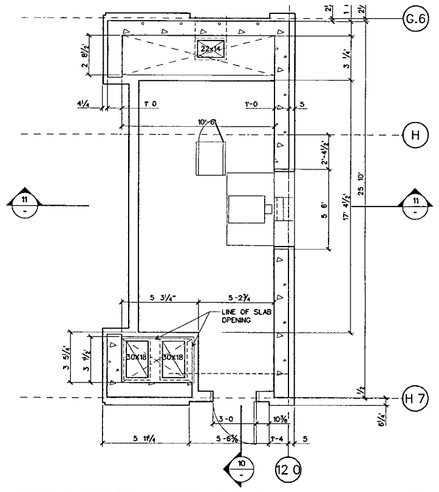

STAIR 5: MUSEUM UPPER LEVEL PLAN (30)

SCALE 1/4" = 1'-0" PLANS/STAIR 5

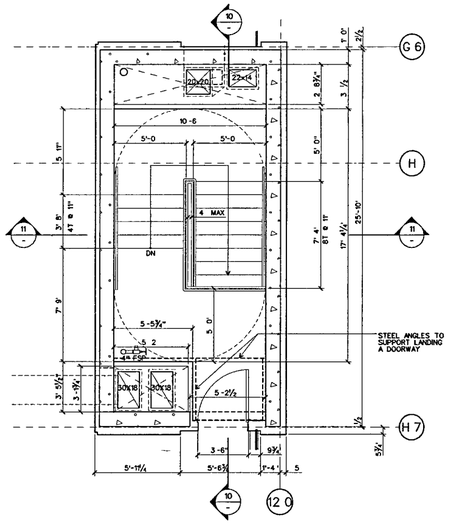

STAIR 5: MUSEUM LOWER LEVEL PLAN (21)

SCALE 1/4" = 1'-0" PLANS/STAIR 5

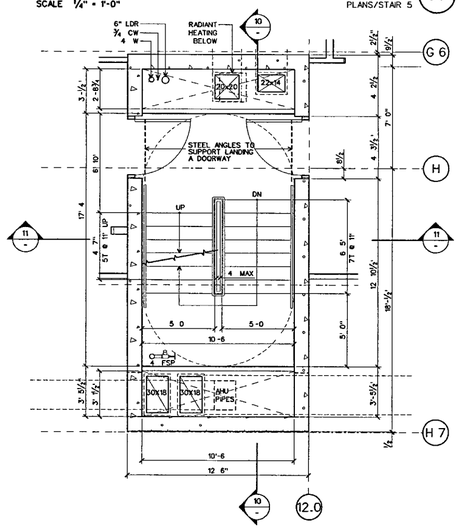

STAIR 5: SECOND LEVEL PLAN (20)

SCALE 1/4" = 1'-0" PLANS/STAIR 5

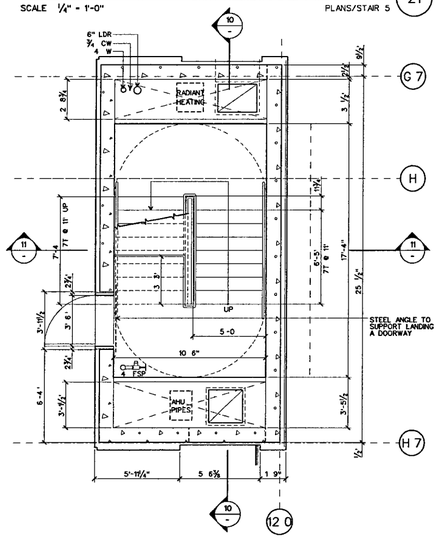

STAIR 5: GROUND LEVEL PLAN (13)

SCALE 1/4" = 1'-0" PLANS/STAIR 5

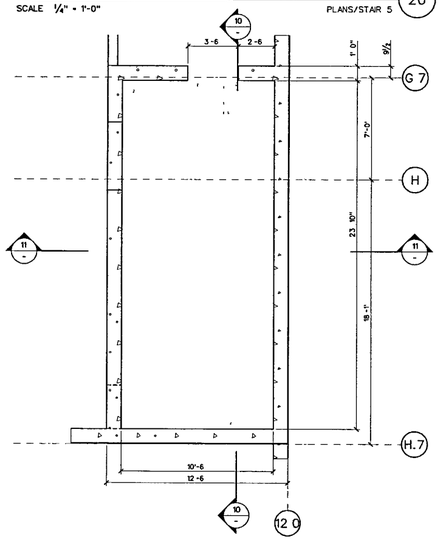

STAIR 5: BASEMENT LEVEL PLAN (12)

SCALE 1/4" = 1'-0" PLANS/STAIR 5

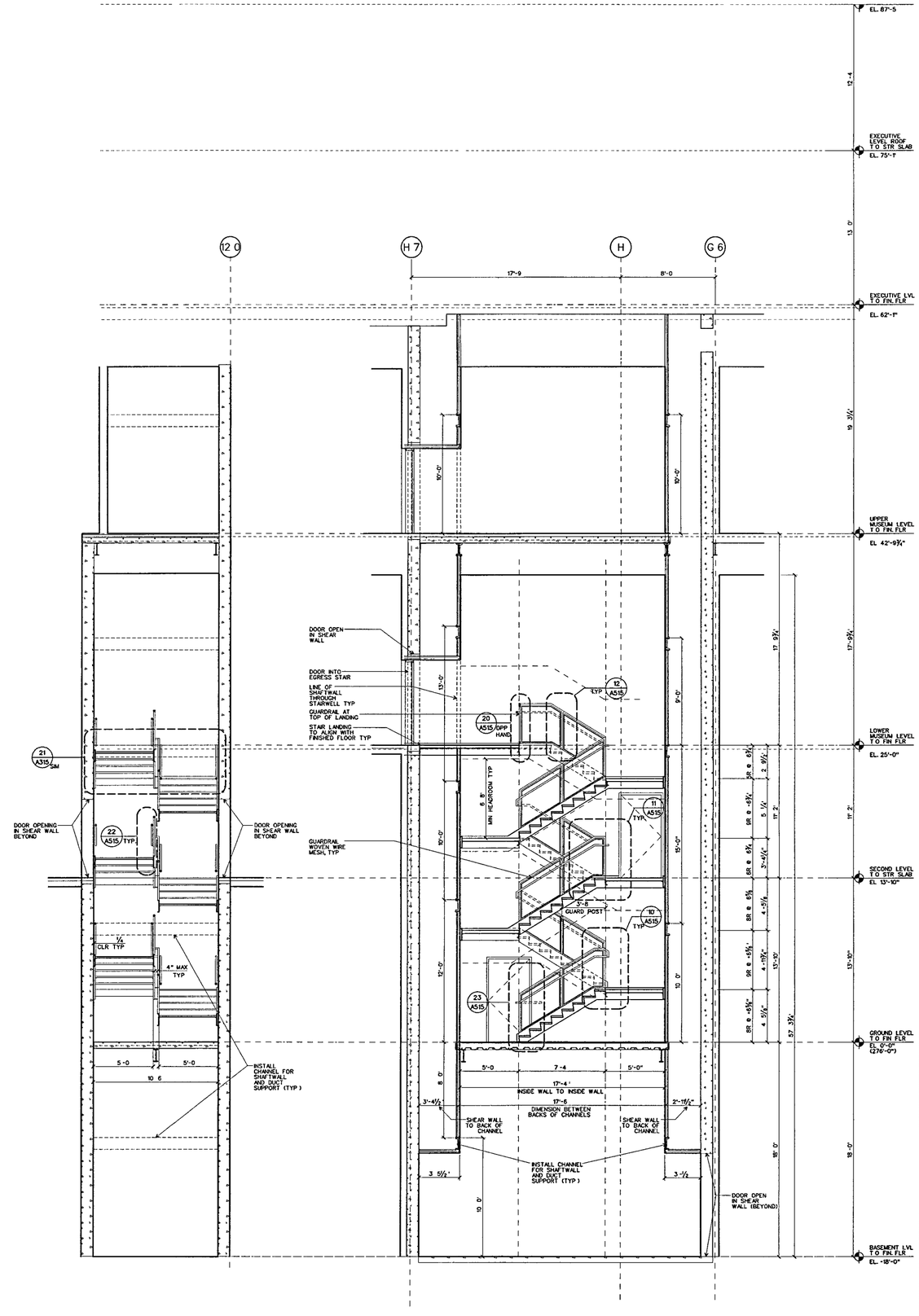

STAIR 5: N/S SECTION LOOKING EAST (11)

SCALE 1/4" = 1'-0" PLANS/STAIR 5

STAIR 5: E/W SECTION LOOKING NORTH (10)

SCALE 1/4" = 1'-0" PLANS/STAIR 5

WILLIAM J CLINTON PRESIDENTIAL CENTER

LITTLE ROCK, ARKANSAS

Architect

POLSHEK PARTNERSHIP LLP
320 West 13th Street
New York New York 10014
212.807 7171

Coordinating Architects

POLK STANLEY YEARY ARCHITECTS Ltd
700 South Schiller Street
Little Rock, Arkansas 72201
501 378 0878

WITSELL EVANS RASCO
901 West Third Street
Little Rock Arkansas 72201
501 374 5300

WOODS CARADINE ARCHITECTS
2200 South Main Street
Little Rock, Arkansas 72206
501 374.4060

Landscape Architects

HARGREAVES ASSOCIATES
118 Magazine Street
Cambridge Massachusettes 02139
617 661 0070

LANDSCAPE ARCHITECTURE, Inc.
2300 Cottondale Lane Suite 202
Little Rock, Arkansas 72202
501 374 5810

Structural Engineer

LESLIE E. ROBERTSON ASSOC , RLLP
30 Broad Street, 47th Floor
New York, New York 10004
212.750 9000

MEP Engineers

FLACK + KURTZ Inc.
475 Fifth Avenue
New York, New York 10017
212 532 9600

CROMWELL ARCHITECTS ENGINEERS
101 South Spring Street
Little Rock, Arkansas 72201
501 372 2900

Curtainwall Consultant

R. A. HEINTGES ARCHITECTS
126 Fifth Avenue 9th Floor
New York, New York 10011
212 652-2966

Seal

RICHARD OLCZAK REGISTERED ARCHITECT 3405 ARKANSAS

Issue	Date
100% Construction Documents	09/27/02
90% Progress Printing	08/30/02
100% Struct./ CD Progress	07/01/02
Bridge Bldg Substructure	06/14/02
100% Steel & Concrete CD	05/15/02
& Architectural CD Progress	
100% Design Development*	03/01/02

*Issued orig A503/Former A506 dtls on A511

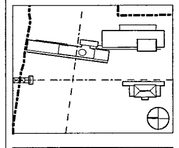

Job No 9908

Scale AS NOTED

Date September 27, 2002

Title

MUSEUM BUILDING STAIR 5 PLANS AND SECTIONS

Sheet No

A506

FOR OFFICIAL USE ONLY

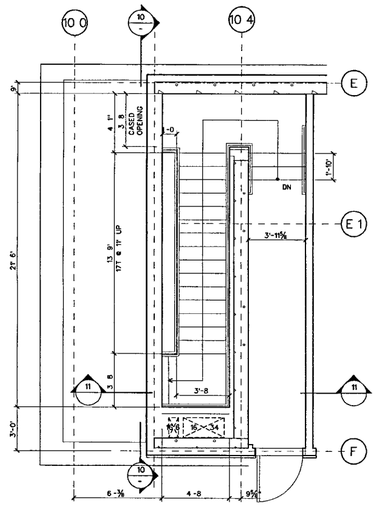

STAIR 6- MECH LEVEL PLAN (31)

SCALE ¼" = 1'-0"

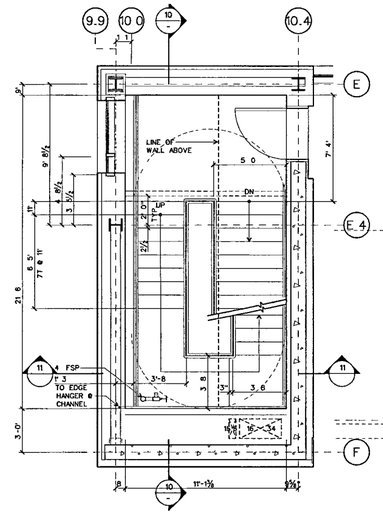

STAIR 6: EXEC LEVEL PLAN (30)

SCALE ¼" = 1'-0"

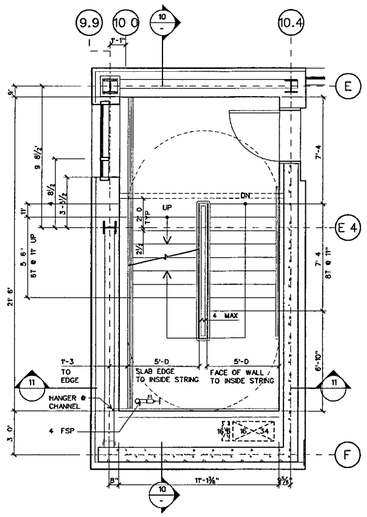

STAIR 6- INTERMEDIATE LEVEL PLAN (22)

SCALE ¼ = 1'-0"

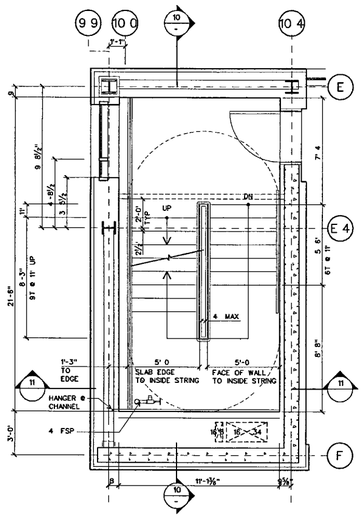

STAIR 6- UPPER MUSEUM LEVEL (21)

SCALE ¼" = 1'-0"

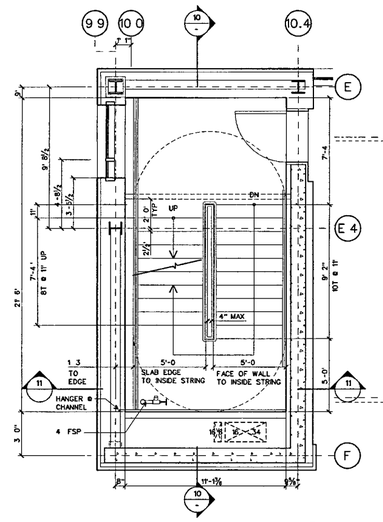

STAIR 6- MUSEUM LOWER LEVEL (20)

SCALE ¼" = 1'-0"

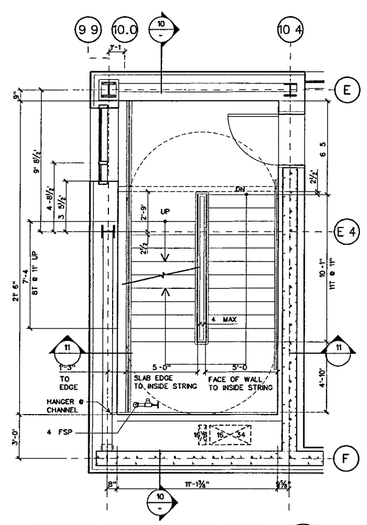

STAIR 6: SECOND LEVEL PLAN (14)

SCALE ¼" = 1'-0"

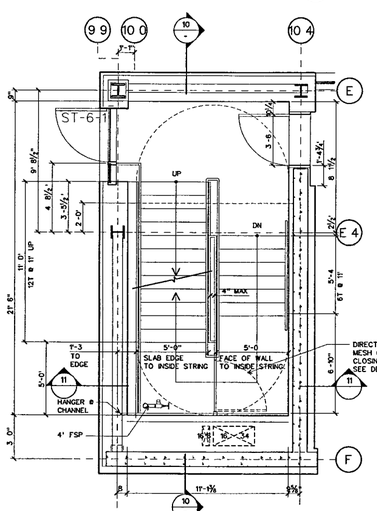

STAIR 6: GROUND LEVEL PLAN (13)

SCALE ¼" = 1'-0"

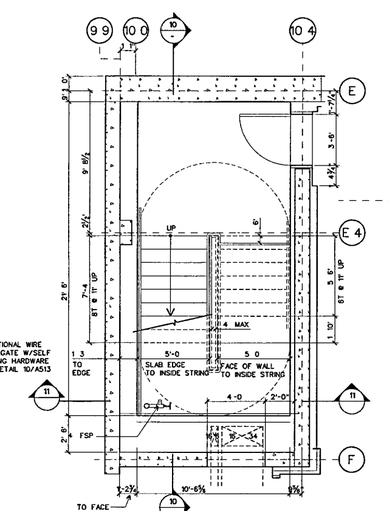

STAIR 6: BASEMENT LEVEL PLAN (12)

SCALE ¼ = 1-0'

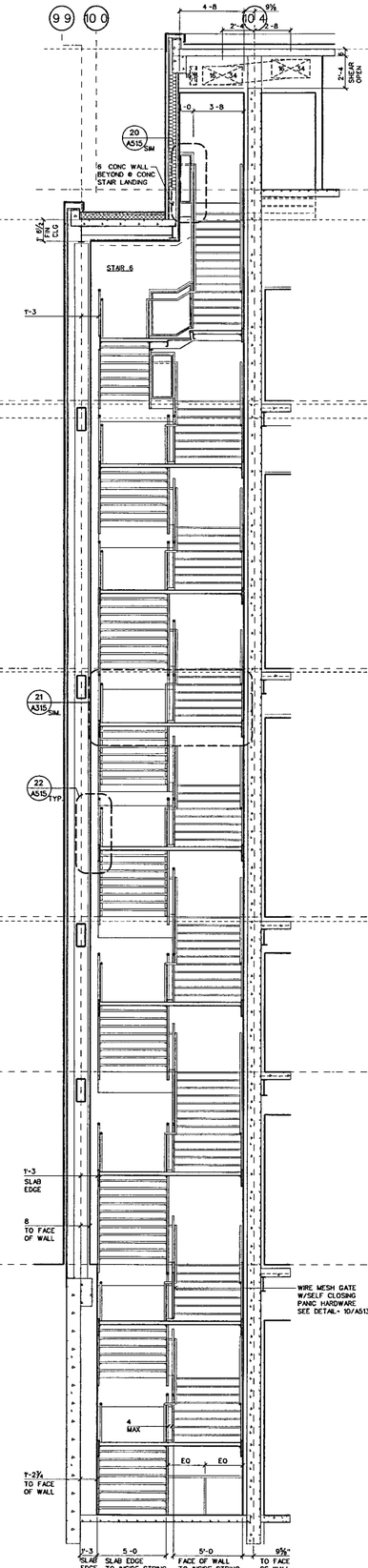

STAIR 6 N/S SECTION (11)

SCALE ¼" = 1-0"

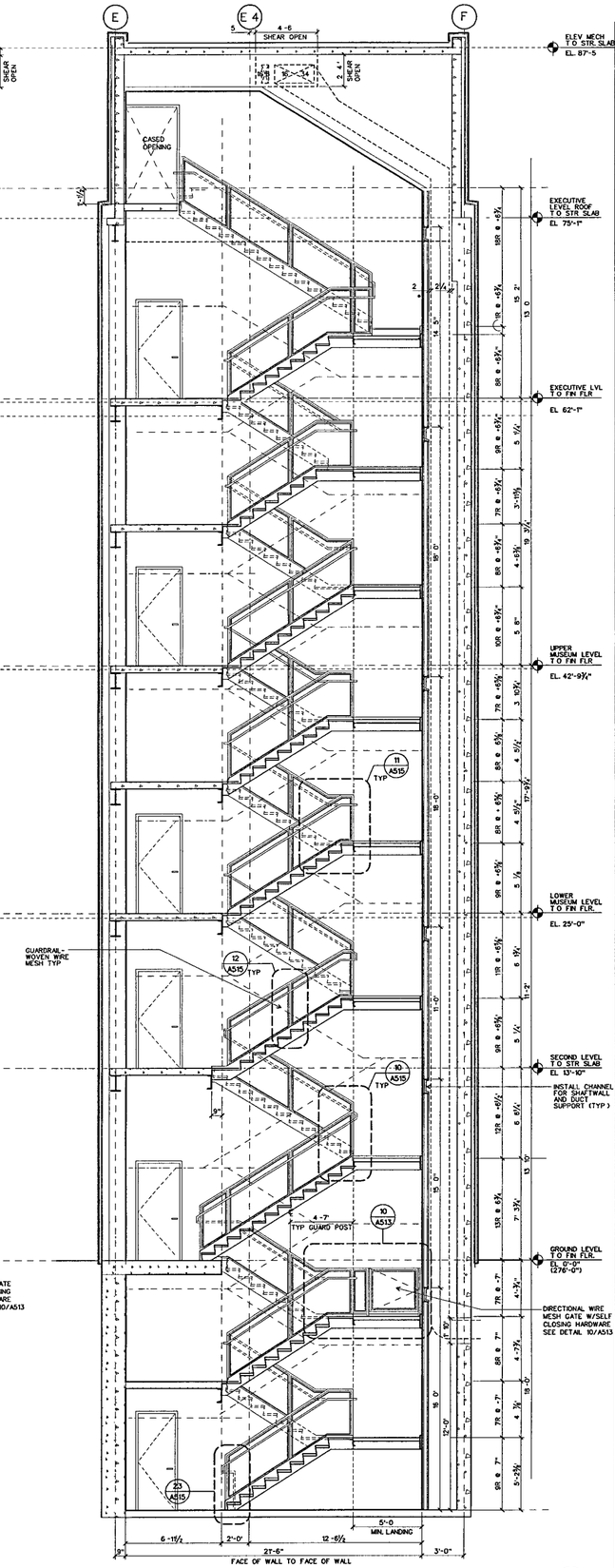

STAIR 6: E/W SECTION (10)

SCALE ¼" = 1'-0"

WILLIAM J CLINTON PRESIDENTIAL CENTER

LITTLE ROCK, ARKANSAS

Architect

POLSHEK PARTNERSHIP LLP
320 West 13th Street
New York New York 10014
212.807 7171

Coordinating Architects

POLK STANLEY YEARY ARCHITECTS Ltd
700 South Schiller Street
Little Rock, Arkansas 72201
501 378 0678

WITSELL EVANS RASCO
901 West Third Street
Little Rock, Arkansas 72201
501 374 5300

WOODS CARADINE ARCHITECTS
2200 South Main Street
Little Rock, Arkansas 72206
501 374 4060

Landscape Architects

HARGREAVES ASSOCIATES
118 Magazine Street
Cambridge Massachusettes 02139
617 661 0070

LANDSCAPE ARCHITECTURE Inc.
2300 Cottondale Lane Suite 202
Little Rock, Arkansas 72202
501 374 5810

Structural Engineer

LESLIE E ROBERTSON ASSOC , RLLP
30 Broad Street, 47th Floor
New York, New York 10004
212 750 9000

MEP Engineers

FLACK + KURTZ Inc.
475 Fifth Avenue
New York, New York 10017
212 532 9600

CROMWELL ARCHITECTS ENGINEERS
101 South Spring Street
Little Rock, Arkansas 72201
501 372.2900

Curtainwall Consultant

R. A. HEINTGES ARCHITECTS
126 Fifth Avenue, 9th Floor
New York, New York 10011
212 652-2966

Seal

RICHARD OLSON REGISTERED ARCHITECT 3405 ARKANSAS

Issue	Date
100% Construction Documents	09/27/02
90% Progress Printing	08/30/02
100% Struct./ CD Progress	07/01/02
Bridge Bldg Substructure	06/14/02
100% Steel & Concrete CD	05/15/02
& Architectural CD Progress	
100% Design Development*	03/01/02

*Issued originally as A504

Job No 9908

Scale 1/4"= 1-0"

Date September 27, 2002

Title

MUSEUM BUILDING
STAIR 6 PLANS
AND SECTIONS

Sheet No

A507

FOR OFFICIAL USE ONLY

157

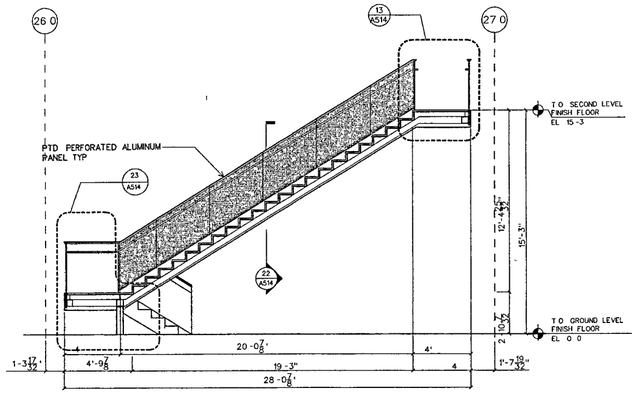

STAIR 12 N/S SECTION LOOKING EAST

SCALE 1/4" = 1'-0"

stair 8-9-12 (32)

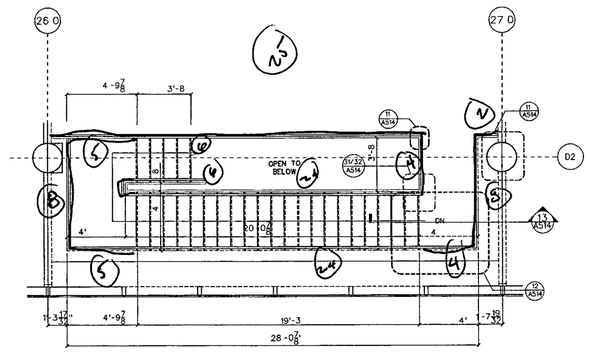

STAIR 12 SECOND LEVEL PLAN

SCALE 1/4" = 1'-0"

stair 8-9-12 (31)

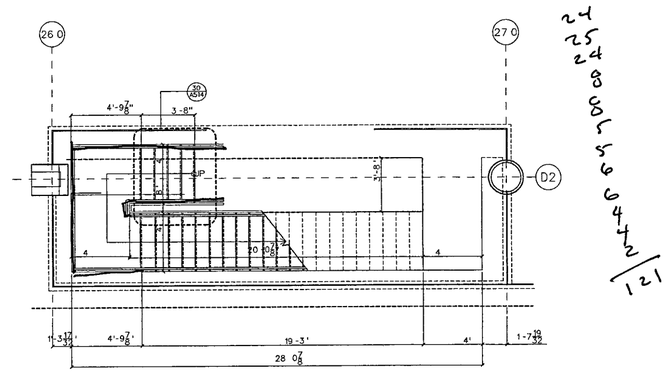

STAIR 12 GROUND LEVEL PLAN

SCALE 1/4" = 1'-0"

stair 8-9-12 (30)

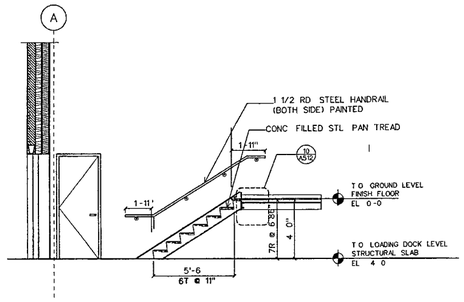

STAIR 9 E/W SECTION LOOKING SOUTH

SCALE 1/4" = 1'-0"

stair 8-9-12 (21)

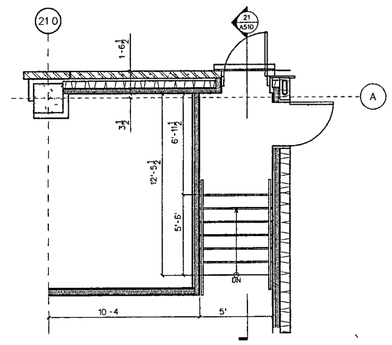

STAIR 9 GROUND LEVEL PLAN

SCALE 1/4" = 1'-0"

stair 8-9-12 (20)

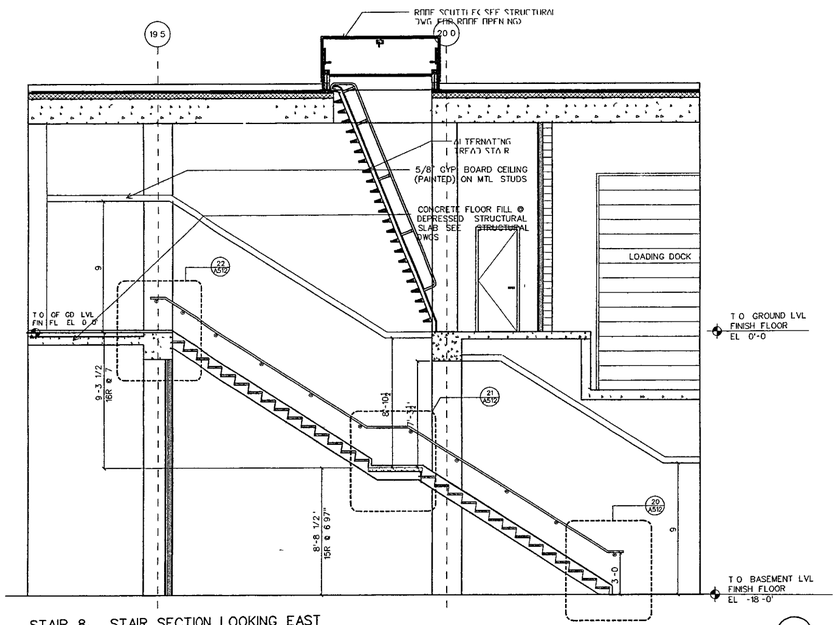

STAIR 8 STAIR SECTION LOOKING EAST

SCALE 1/4" = 1'-0"

stair 8-9-12 (12)

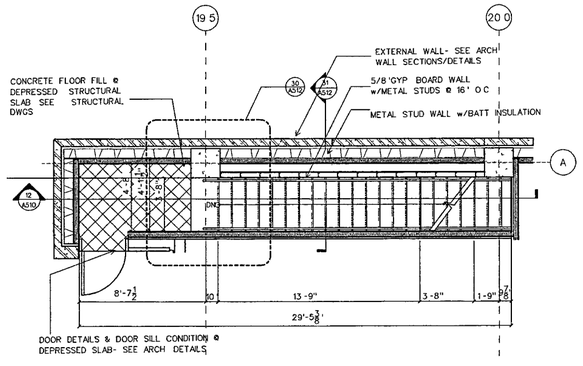

STAIR 8 GROUND LEVEL PLAN

SCALE 1/4" = 1'-0"

stair 8-9-12 (11)

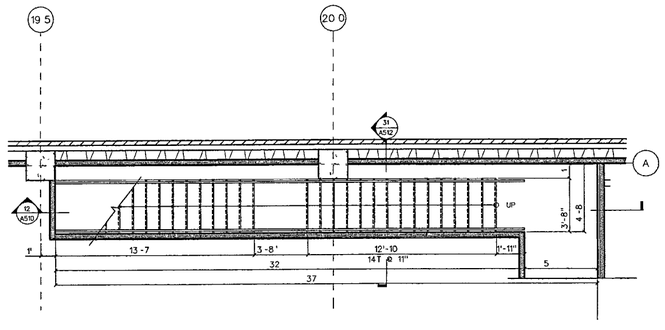

STAIR 8 BASEMENT LEVEL PLAN

SCALE 1/4" = 1'-0"

stair 8-9-12 (10)

WILLIAM J. CLINTON PRESIDENTIAL CENTER

LITTLE ROCK, ARKANSAS

Architect

POLSHEK PARTNERSHIP LLP
320 West 13th Street
New York, New York 10014
212 807 7171

Coordinating Architects

POLK STANLEY YEARY ARCHITECTS Ltd
700 South Schiller Street
Little Rock, Arkansas 72201
501 378 0878

WITSELL EVANS RASCO
901 West Third Street
Little Rock, Arkansas 72201
501 374 5300

WOODS CARADINE ARCHITECTS
2200 South Main Street
Little Rock, Arkansas 72206
501 374 4060

Landscape Architects

HARGREAVES ASSOCIATES
118 Magazine Street
Cambridge, Massachusettes 02139
617 661 0070

LANDSCAPE ARCHITECTURE, Inc.
2300 Cottondale Lane Suite 202
Little Rock, Arkansas 72202
501 374 5610

Structural Engineer

LESLIE E ROBERTSON ASSOC , RLLP
30 Broad Street, 47th Floor
New York, New York 10004
212 750 9000

MEP Engineers

FLACK + KURTZ Inc.
475 Fifth Avenue
New York, New York 10017
212 532 9600

CROMWELL ARCHITECTS ENGINEERS
101 South Spring Street
Little Rock, Arkansas 72201
501 372.2900

Curtainwall Consultant

R. A. HEINTGES ARCHITECTS
126 Fifth Avenue, 9th Floor
New York, New York 10011
212 652-2966

Seal

Issue	Date
100% Construction Doc.	09/27/02
90% Progress Printing	08/30/02

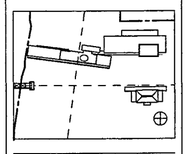

Job No 9906

Scale As shown

Date September 27, 2002

Title STAIR 8 / 9 / 12

Sheet No **A510**

FOR OFFICIAL USE ONLY

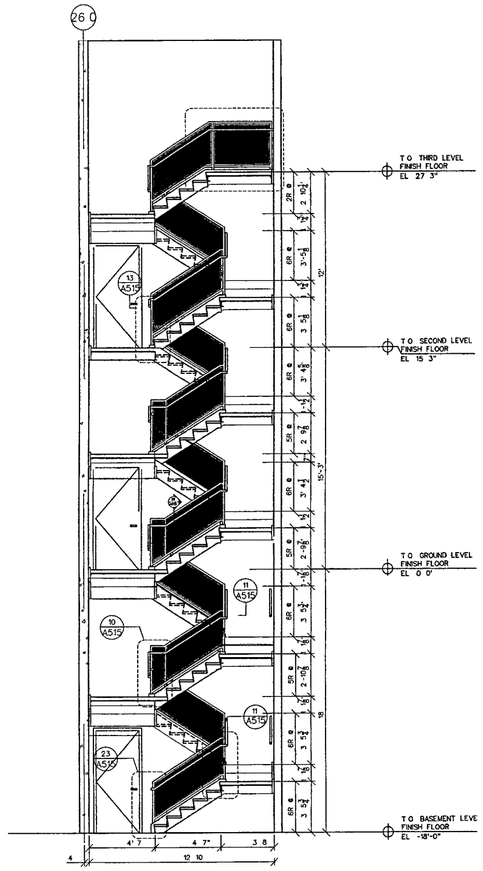

STAIR 10 N/S SECTION LOOKING EAST

SCALE 1/4" = 1'-0" Stair 10 32

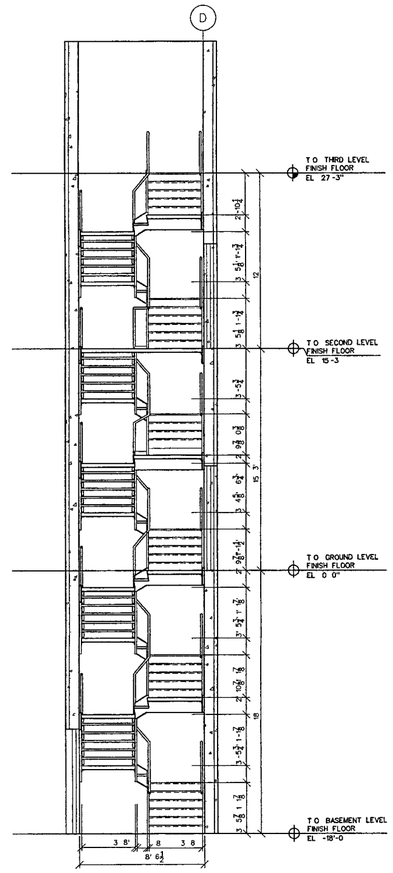

STAIR 10 E/W SECTION LOOKING SOUTH

SCALE 1/4" = 1'-0" Stair 10 31

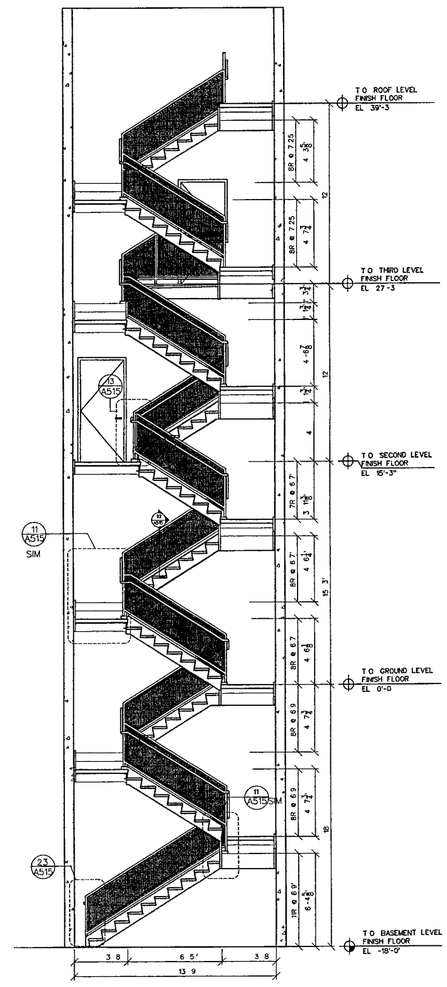

STAIR 11 E/W SECTION LOOKING SOUTH

SCALE 1/4" = 1'-0" Stair 11 21

WILLIAM J. CLINTON PRESIDENTIAL CENTER

LITTLE ROCK, ARKANSAS

Architect

POLSHEK PARTNERSHIP LLP
320 West 13th Street
New York, New York 10014
212 807 7171

Coordinating Architects

POLK STANLEY YEARY ARCHITECTS Ltd
700 South Schiller Street
Little Rock, Arkansas 72201
501.378 0878

WITSELL EVANS RASCO
901 West Third Street
Little Rock, Arkansas 72201
501 374 5300

WOODS CARADINE ARCHITECTS
2200 South Main Street
Little Rock, Arkansas 72206
501 374.4060

Landscape Architects

HARGREAVES ASSOCIATES
118 Magazine Street
Cambridge, Massachusettes 02139
617 661 0070

LANDSCAPE ARCHITECTURE, Inc.
2300 Cottondale Lane Suite 202
Little Rock, Arkansas 72202
501 374 5610

Structural Engineer

LESLIE E. ROBERTSON ASSOC , RLLP
30 Broad Street, 47th Floor
New York, New York 10004
212 750 9000

MEP Engineers

FLACK + KURTZ Inc.
475 Fifth Avenue
New York, New York 10017
212 532 9600

CROMWELL ARCHITECTS ENGINEERS
101 South Spring Street
Little Rock, Arkansas 72201
501 372.2900

Curtainwall Consultant

R. A. HEINTGES ARCHITECTS
126 Fifth Avenue 9th Floor
New York, New York 10011
212 652-2966

Seal

Issue	Date
100% Construction Doc.	09/27/02
90% Progress Printing	08/30/02

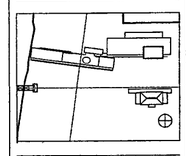

Job No 9908

Scale As Shown

Date September 27, 2002

Title STAIR 10 / 11

Sheet No A511

FOR OFFICIAL USE ONLY

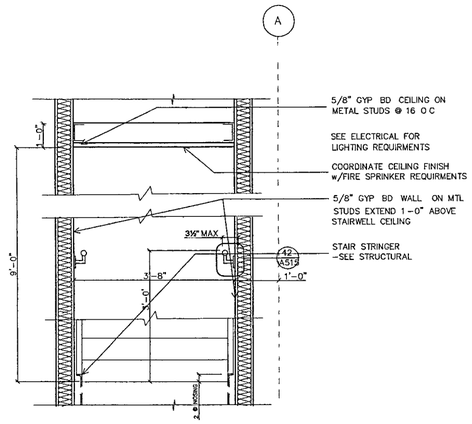

STAIR 8: CROSSECTION @ STAIRWELL

SCALE 3/4" = 1'-0" stair 8 31

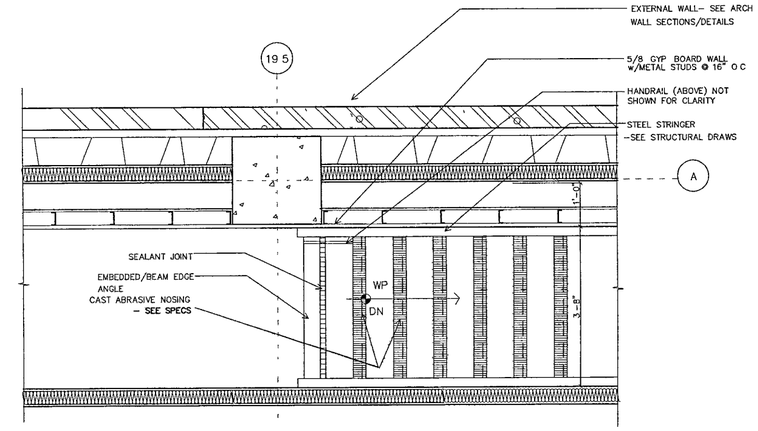

STAIR 8 STAIR NOSING PLAN DETAIL

SCALE 3/4" = 1'-0" stair 8 30

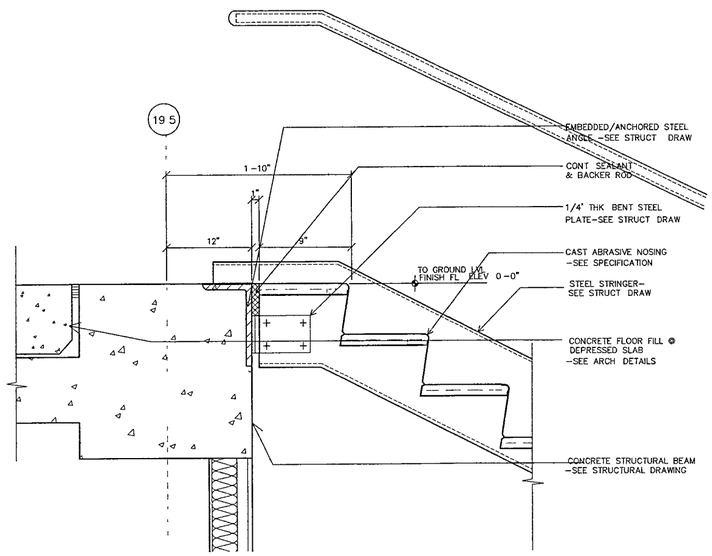

STAIR 8 STAIR NOSING SECTION DETAIL

SCALE 1 1/2" = 1'-0" stair 8 22

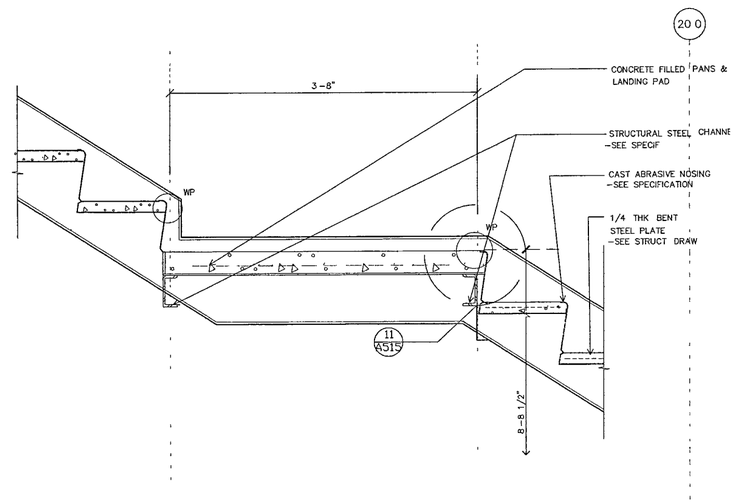

STAIR 8. SECTION @ STAIR LANDING

SCALE 1 1/2" = 1'-0" stair 8 21

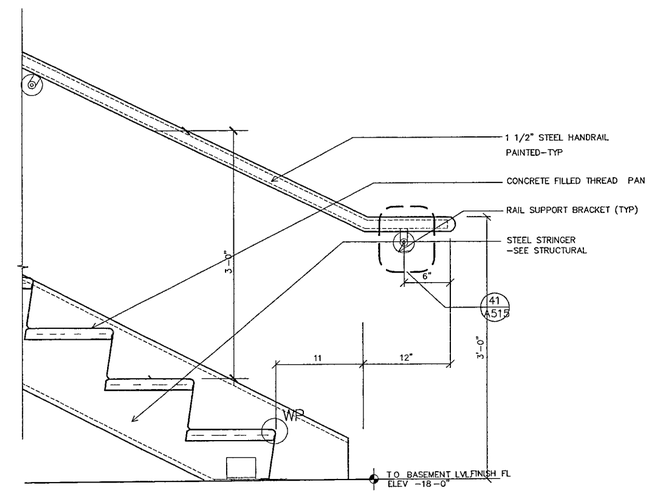

STAIR 8 SECTION @ BASE FLOOR

SCALE 1 1/2" = 1'-0" stair 8 20

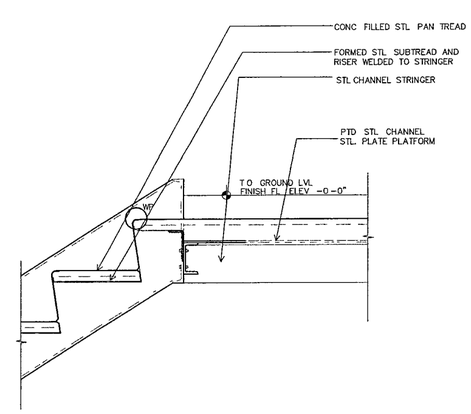

STAIR 9. STAIR SECTION DETAIL @ LANDING

SCALE 1 1/2" = 1'-0" stair 9 10

WILLIAM J. CLINTON PRESIDENTIAL CENTER

LITTLE ROCK, ARKANSAS

Architect

POLSHEK PARTNERSHIP LLP
320 West 13th Street
New York, New York 10014
212 807 7171

Coordinating Architects

POLK STANLEY YEARY ARCHITECTS Ltd
700 South Schiller Street
Little Rock, Arkansas 72201
501 378 0878

WITSELL EVANS RASCO
901 West Third Street
Little Rock, Arkansas 72201
501 374 5300

WOODS CARADINE ARCHITECTS
2200 South Main Street
Little Rock, Arkansas 72206
501 374 4060

Landscape Architects

HARGREAVES ASSOCIATES
118 Magazine Street
Cambridge, Massachusettes 02139
617 661 0070

LANDSCAPE ARCHITECTURE, Inc.
2300 Cottondale Lane Suite 202
Little Rock, Arkansas 72202
501 374 5810

Structural Engineer

LESLIE E. ROBERTSON ASSOC , RLLP
30 Broad Street, 47th Floor
New York, New York 10004
212 750 9000

MEP Engineers

FLACK + KURTZ Inc
475 Fifth Avenue
New York, New York 10017
212 532 9600

CROMWELL ARCHITECTS ENGINEERS
101 South Spring Street
Little Rock, Arkansas 72201
501 372 2900

Curtainwall Consultant

R. A. HEINTGES ARCHITECTS
126 Fifth Avenue, 9th Floor
New York, New York 10011
212.652-2966

Seal

Issue	Date
100% Construction Doc	09/27/02
90% Progress Printing	08/30/02

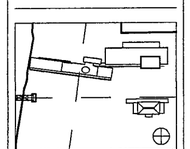

Job No 9908

Scale As Shown

Date September 27, 2002

Title STAIR DETAILS

Sheet No A512

FOR OFFICIAL USE ONLY

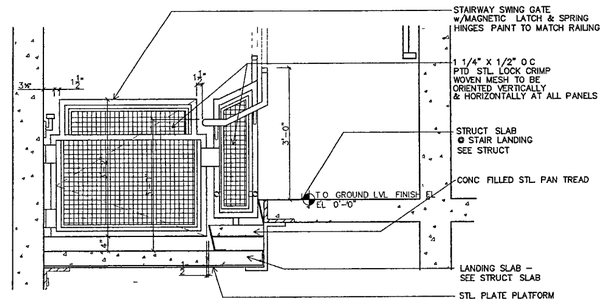

STAIR 10 ELEVATION @ GR LEV STAIR GATE

SCALE 3/4" = 1'-0"

stair 10 — 30

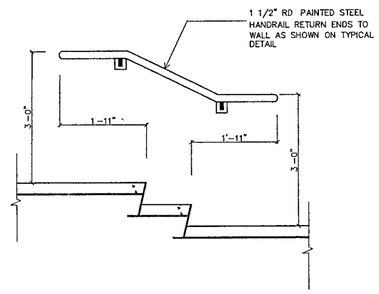

STAIR 10 HANDRAIL ELEVATION

SCALE 3/4" = 1'-0"

stair 10 — 20

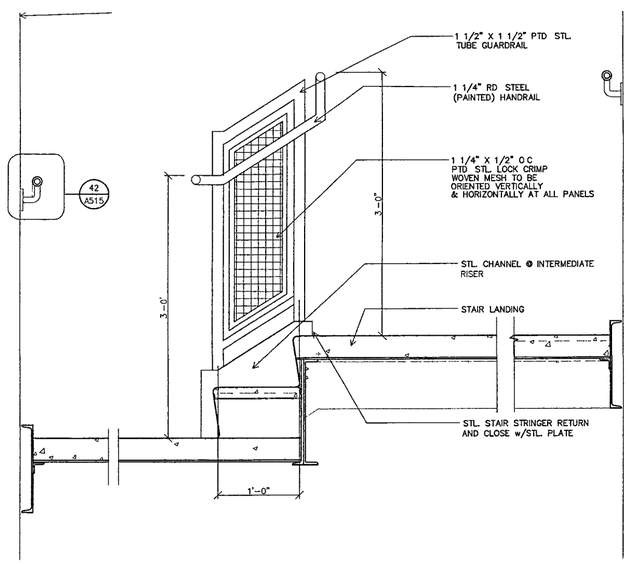

ELEVATION @ INTERMEDIATE RISER

SCALE 3/4" = 1'-0"

stair 10, 11 — 11

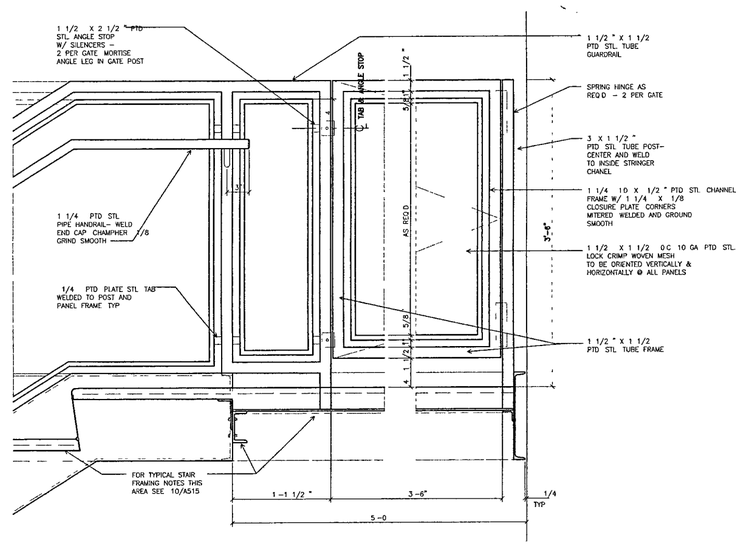

GURADRAIL PASSAGE ACCESS GATE

SCALE 3/4" = 1'-0"

stair 10 — 10

WILLIAM J. CLINTON PRESIDENTIAL CENTER

LITTLE ROCK, ARKANSAS

Architect

POLSHEK PARTNERSHIP LLP
320 West 13th Street
New York, New York 10014
212.807 7171

Coordinating Architects

POLK STANLEY YEARY ARCHITECTS Ltd
700 South Schiller Street
Little Rock, Arkansas 72201
501 378 0878

WITSELL EVANS RASCO
901 West Third Street
Little Rock, Arkansas 72201
501 374 5300

WOODS CARADINE ARCHITECTS
2200 South Main Street
Little Rock, Arkansas 72206
501 374.4060

Landscape Architects

HARGREAVES ASSOCIATES
118 Magazine Street
Cambridge, Massachusettes 02139
617 661 0070

LANDSCAPE ARCHITECTURE, Inc
2300 Cottondale Lane Suite 202
Little Rock, Arkansas 72202
501 374 5610

Structural Engineer

LESLIE E ROBERTSON ASSOC , RLLP
30 Broad Street, 47th Floor
New York, New York 10004
212 750 9000

MEP Engineers

FLACK + KURTZ Inc
475 Fifth Avenue
New York, New York 10017
212 532.9600

CROMWELL ARCHITECTS ENGINEERS
101 South Spring Street
Little Rock Arkansas 72201
501 372.2900

Curtainwall Consultant

R. A HEINTGES ARCHITECTS
126 Fifth Avenue, 9th Floor
New York, New York 10011
212 652-2966

Seal

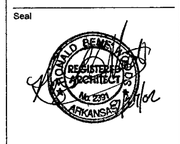

Issue	Date
100% Construction Doc.	09/27/02
90% Progress Printing	08/30/02
100% Struct./ CD Progress	07/01/02

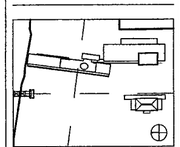

Job No 9906

Scale As Shown

Date September 27, 2002

Title **STAIR DETAILS**

Sheet No **A513**

FOR OFFICIAL USE ONLY

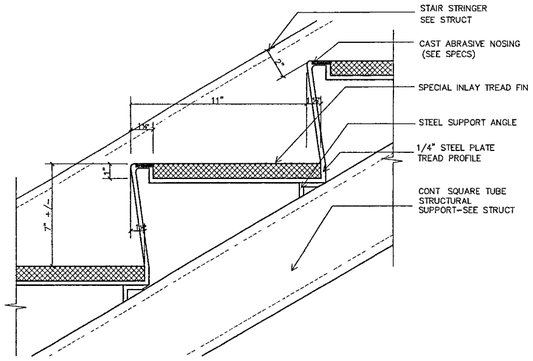

STAIR 12· TYP STAIR TREAD/RISER (33)
SCALE 3" = 1'-0" Stair 12

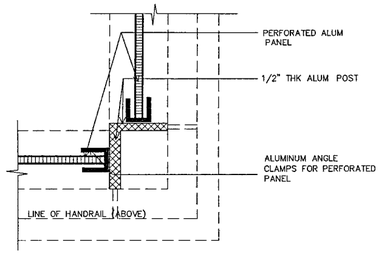

STAIR 12 STAIR RAIL BELOW GUARDRAIL (32)
SCAL 3" = 1'-0" Stair 12

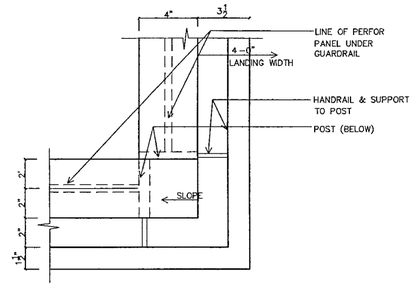

STAIR 12 GUARD/HANDRAIL ABOVE GUARDRAIL (31)
SCALE 3" = 1'-0" Stair 12

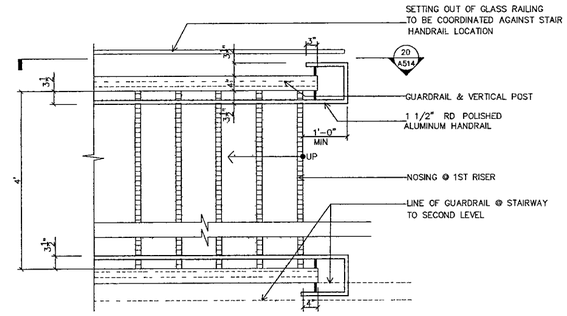

STAIR PLAN @ GROUND LEV (30)
SCALE 3/4" = 1'-0" Stair 12

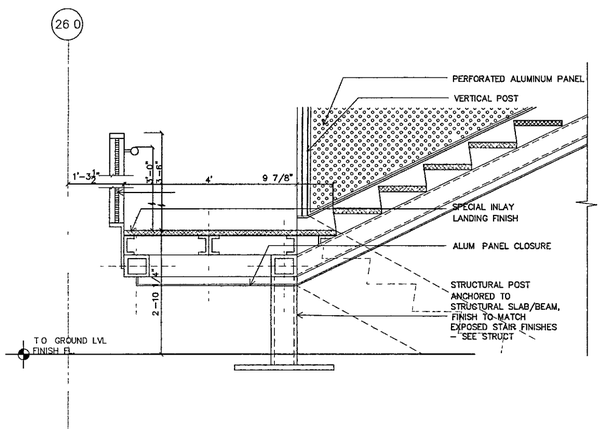

STAIR 12. SECTION @ INTERMEDIATE LANDING (23)
SCALE 3/4" = 1'-0" Stair 12

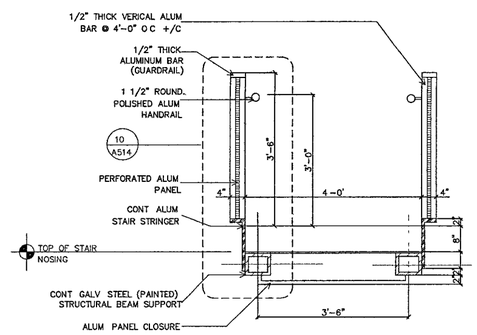

STAIR 12 CROSSECTION @ STAIR (22)
SCALE 3/4" = 1'-0" Stair 12

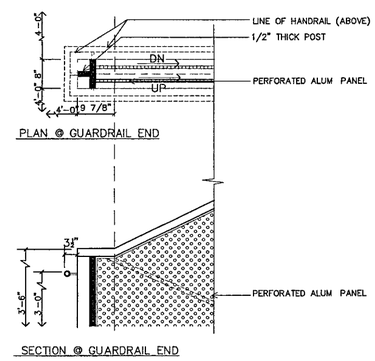

STAIR 12 PLAN & SECTION @ GURADRAIL END (21)
SCALE 3/4" = 1'-0" Stair 12

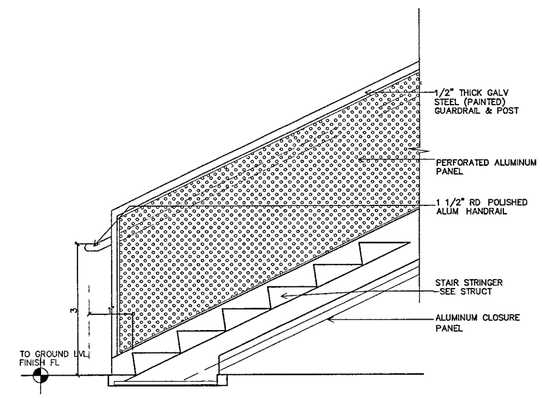

STAIR 12 GROUND LEVEL (20)
SCALE 3/4" = 1'-0" Stair 12

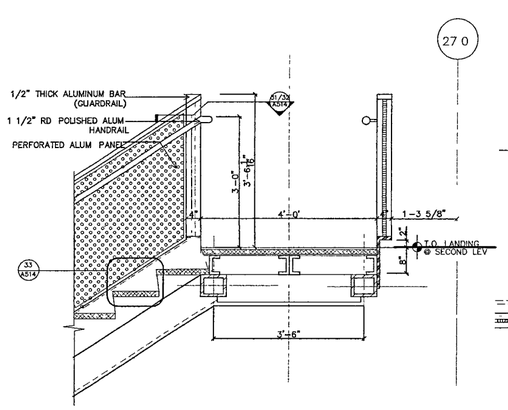

STAIR 12 STAIR LANDING SECTION (13)
SCALE 3/4" = 1'-0" Stair 12

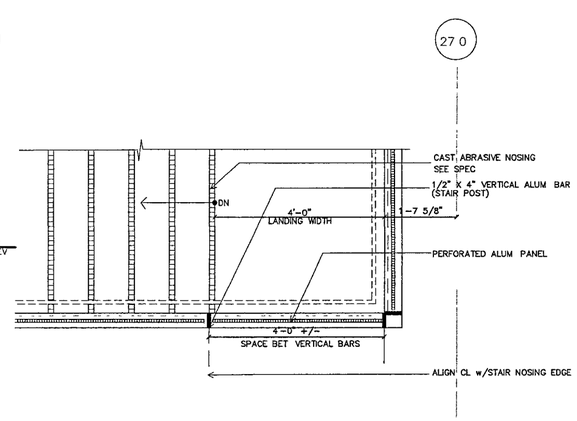

STAIR 12. PLAN @ LANDING CORNER (12)
SCALE 3/4" = 1'-0" Stair 12

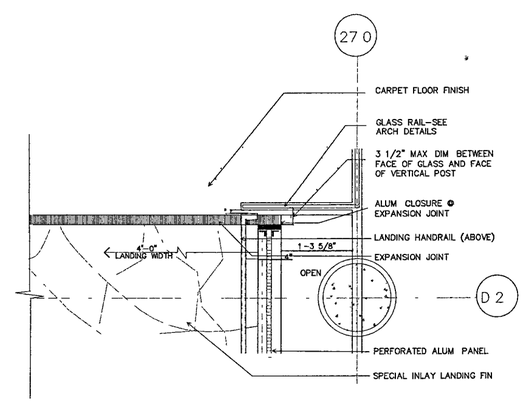

STAIR 12 PLAN DETAIL @ SECOND LVL TRANSITION (11)
SCALE 1" = 1'-0" Stair 12

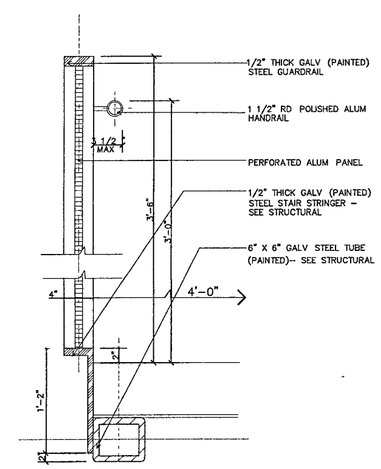

STAIR 12 SECTION DETAIL (10)
SCALE 1 1/2" = 1'-0" Stair 12

WILLIAM J. CLINTON PRESIDENTIAL CENTER

LITTLE ROCK, ARKANSAS

Architect

POLSHEK PARTNERSHIP LLP
320 West 13th Street
New York, New York 10014
212.807 7171

Coordinating Architects

POLK STANLEY YEARY ARCHITECTS Ltd
700 South Schiller Street
Little Rock, Arkansas 72201
501 378 0878

WITSELL EVANS RASCO
901 West Third Street
Little Rock, Arkansas 72201
501 374 5300

WOODS CARADINE ARCHITECTS
2200 South Main Street
Little Rock Arkansas 72206
501 374.4060

Landscape Architects

HARGREAVES ASSOCIATES
118 Magazine Street
Cambridge, Massachusettes 02139
617 661 0070

LANDSCAPE ARCHITECTURE, Inc
2300 Cottondale Lane Suite 202
Little Rock, Arkansas 72202
501 374 5610

Structural Engineer

LESLIE E ROBERTSON ASSOC , RLLP
30 Broad Street, 47th Floor
New York, New York 10004
212 750 9000

MEP Engineers

FLACK + KURTZ Inc
475 Fifth Avenue
New York, New York 10017
212 532.9600

CROMWELL ARCHITECTS ENGINEERS
101 South Spring Street
Little Rock, Arkansas 72201
501.372 2900

Curtainwall Consultant

R. A. HEINTGES ARCHITECTS
126 Fifth Avenue, 9th Floor
New York, New York 10011
212.652-2966

Seal

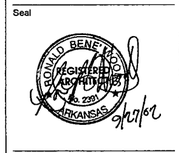

Issue	Date
100% Construction Doc.	09/27/02
90% Progress Printing	08/30/02
100% Struct./ CD Progress	07/01/02

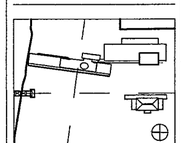

Job No 9908

Scale As Shown

Date September 27 2002

Title STAIR DETAILS

Sheet No A514

FOR OFFICIAL USE ONLY

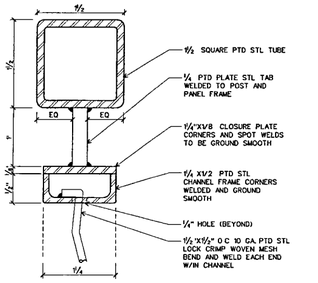

GUARDRAIL DETAIL (44)
FULL SCALE D-STAIR-FIRE

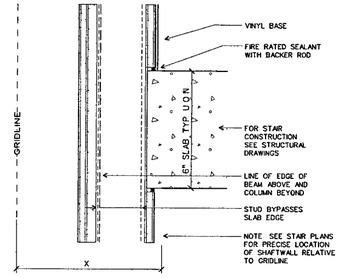

WALL TO SLAB INTERFACE DETAIL (43)
SCALE 3" = 1'-0 D-STAIR-FIRE

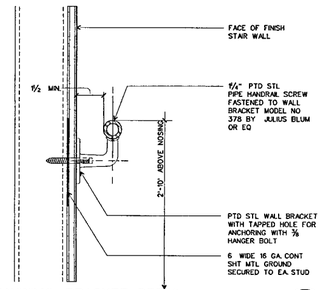

TYP. HANDRAIL BRACKET DETAIL (42)
SCALE 3 = 1-0 D-STAIR-FIRE

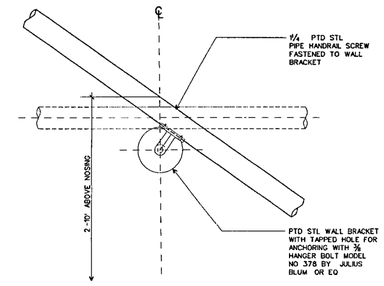

TYP. WALL MOUNTED HANDRAIL (41)
SCALE 3" = 1'-0" D-FIRE-STAIR

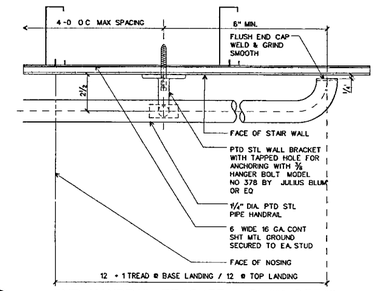

TYP HANDRAIL BRACKET - PLAN DETAIL (40)
SCALE 3" = 1'-0" D-FIRE-STAIR

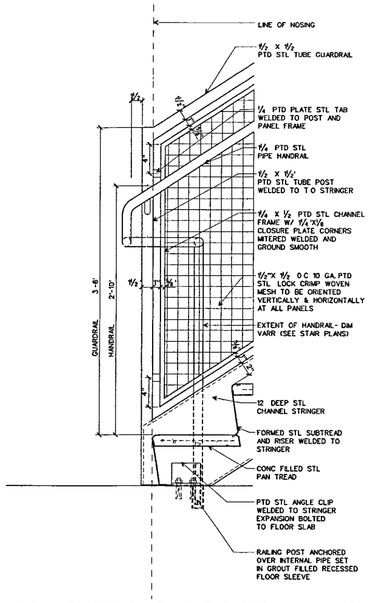

HAND / GUARDRAIL AT STAIR BOTTOM (23)
SCALE ½' =1-0 D-STAIR-FIRE

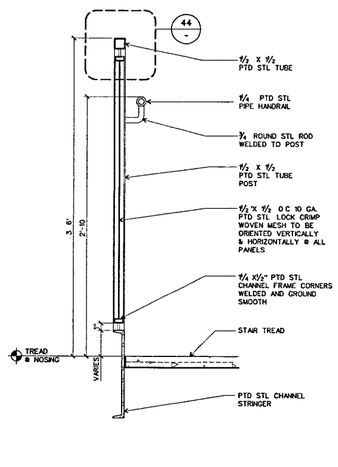

HAND / GUARDRAIL - TYPICAL SECTION (22)
SCALE ½' =1-0 D-STAIR-FIRE

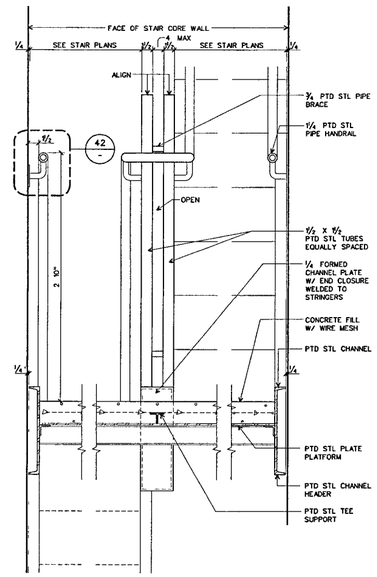

HAND / GUARDRAIL AT INTERMEDIATE LANDING (21)
SCALE ½' =1'-0 D-STAIR-FIRE

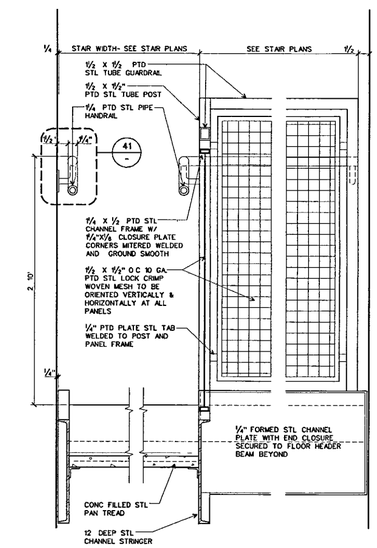

HAND / GUARDRAIL AT UPPER FLOOR LANDING (20)
SCALE ½" =1'-0 D-STAIR-FIRE

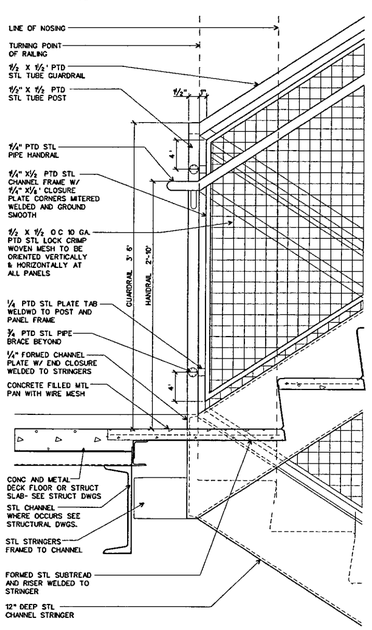

HAND / GUARDRAIL AT FLOOR LANDING (13)
SCALE ½' =1'-0 D-STAIR-FIRE

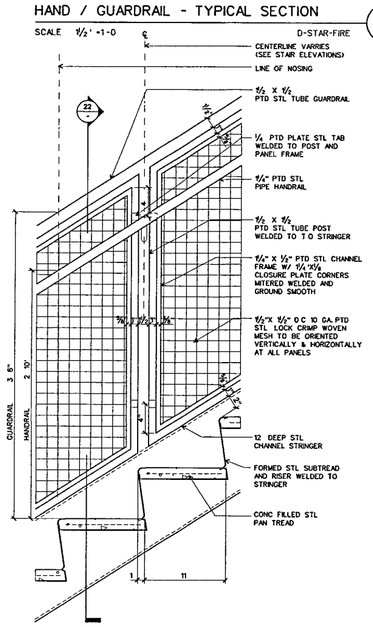

HAND / GUARDRAIL TYPICAL POST DETAIL (12)
SCALE ½ =1-0 D-STAIR-FIRE

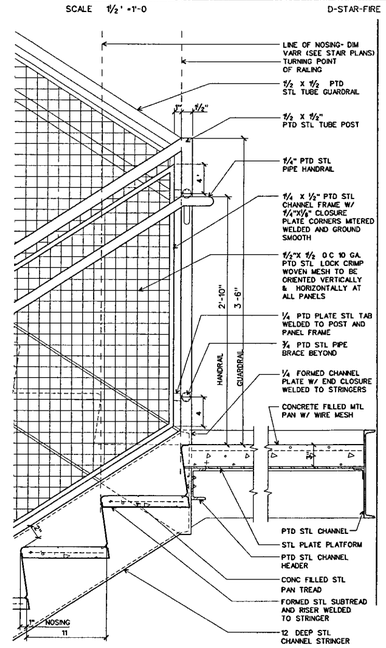

HAND / GUARDRAIL AT INTERMEDIATE LANDING (OFFSET) (11)
SCALE ½ =1-0 D-FIRE-STAIR

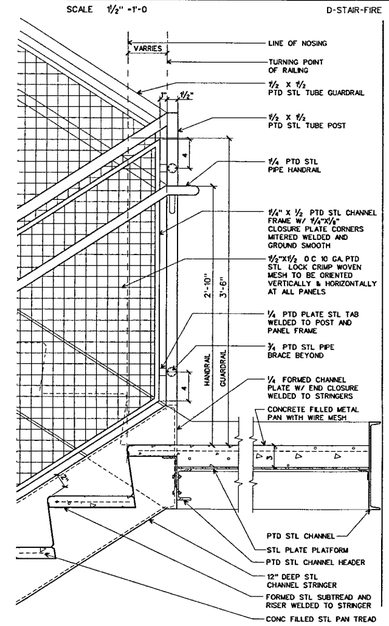

HAND / GUARDRAIL AT INTERMEDIATE LANDING (ALIGNED) (10)
SCALE ½" =1'-0 D-FIRE-STAIR

WILLIAM J CLINTON PRESIDENTIAL CENTER

LITTLE ROCK, ARKANSAS

Architect
POLSHEK PARTNERSHIP LLP
320 West 13th Street
New York, New York 10014
212 807 7171

Coordinating Architects
POLK STANLEY YEARY ARCHITECTS Ltd
700 South Schiller Street
Little Rock, Arkansas 72201
501 378 0878

WITSELL EVANS RASCO
901 West Third Street
Little Rock Arkansas 72201
501.374 5300

WOODS CARADINE ARCHITECTS
2200 South Main Street
Little Rock, Arkansas 72206
501 374.4060

Landscape Architects
HARGREAVES ASSOCIATES
118 Magazine Street
Cambridge Massachusettes 02139
617 661 0070

LANDSCAPE ARCHITECTURE Inc
2300 Cottondale Lane Suite 202
Little Rock, Arkansas 72202
501 374 5610

Structural Engineer
LESLIE E. ROBERTSON ASSOC RLLP
30 Broad Street, 47th Floor
New York, New York 10004
212 750 9000

MEP Engineers
FLACK + KURTZ Inc.
475 Fifth Avenue
New York New York 10017
212 532 9600

CROMWELL ARCHITECTS ENGINEERS
101 South Spring Street
Little Rock, Arkansas 72201
501 372 2900

Curtainwall Consultant
R. A. HEINTGES ARCHITECTS
126 Fifth Avenue, 9th Floor
New York, New York 10011
212 652-2966

Seal

Issue	Date
100% Constructon Documents	09/27/02

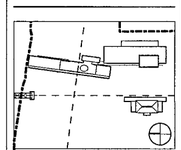

Job No 9908

Scale AS NOTED

Date September 27 2002

Title FIRE STAIR- TYPICAL DETAILS

Sheet No A515

FOR OFFICIAL USE ONLY

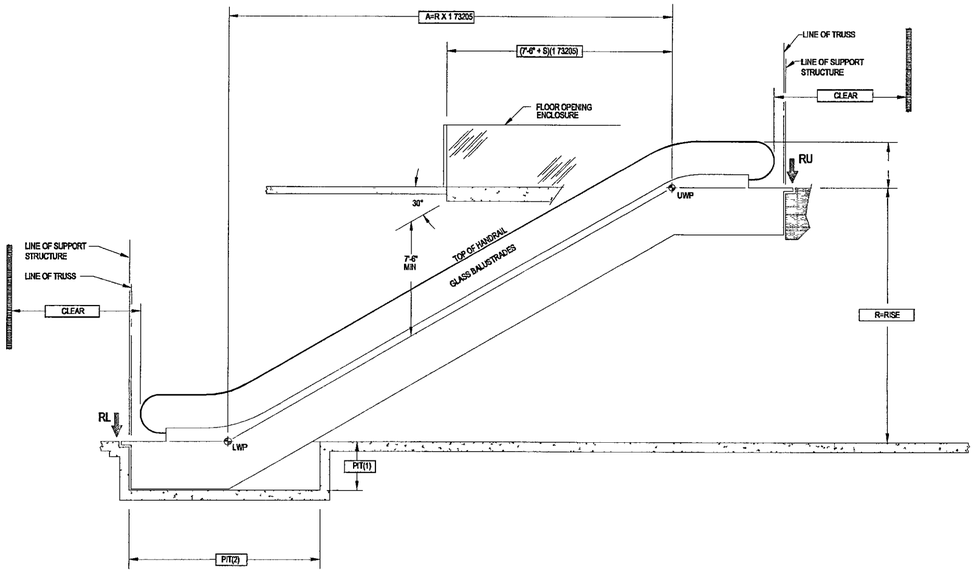

ESCALATORS 1 AND 2 DIMENSIONING CHART (2 FLAT STEPS) 19'-5" RISE									
FLOORS SERVED	STEP WIDTH	"R" (RISE)	SPEED	"A" (Hx1 73205)	PIT(1)	PIT(2)	UPPER REACTION	LOWER REACTION	MOTOR HORSEPOWER
GROUND TO LML	24"	18'-6"	100 FPM	33'-7 1/2"	4'-0" MIN	14'-8" MIN	17 5 KIPS	15 5 KIPS	15 HP

ESCALATORS 3 AND 4 DIMENSIONING CHART (2 FLAT STEPS) 17'-9 3/4" RISE									
FLOORS SERVED	STEP WIDTH	"R" (RISE)	SPEED	"A" (Hx1 73205)	PIT(1)	PIT(2)	UPPER REACTION	LOWER REACTION	MOTOR HORSEPOWER
LML TO UML	24"	17'-9 3/4"	100 FPM	30'-10 1/4"	4' 0" MIN	14'-8" MIN	17 0 KIPS	15 0 KIPS	15 HP

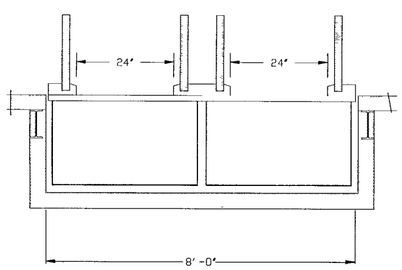

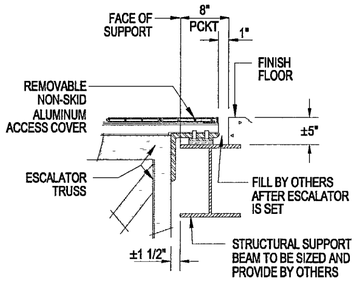

TYPICAL UPPER END SUPPORT
STRUCTURAL STEEL SHOWN
(CONCRETE OPTIONAL)

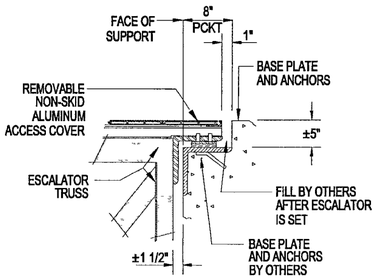

TYPICAL LOWER END SUPPORT
REINFORCED CONCRETE SHOWN
(STEEL OPTIONAL)

TYPICAL SUPPORT STRUCTURES

WILLIAM J CLINTON PRESIDENTIAL CENTER

LITTLE ROCK, ARKANSAS

Architect

POLSHEK PARTNERSHIP LLP
320 West 13th Street
New York, New York 10014
212 807 7171

Coordinating Architects

POLK STANLEY YEARY ARCHITECTS Ltd
700 South Schiller Street
Little Rock, Arkansas 72201
501 378 0878

WITSELL EVANS & RASCO
124 West Capitol Avenue, Suite 1750
Little Rock, Arkansas 72201
501 374 5300

WOODS CARADINE ARCHITECTS
2200 South Main Street
Little Rock, Arkansas 72206
501 374 4060

Landscape Architects

HARGREAVES ASSOCIATES
118 Magazine Street
Cambridge, Massachusettes 02139
617 661 0070

LANDSCAPE ARCHITECTURE, Inc.
400 West Capitol Avenue
Suite 1600 Regions Center
Little Rock, Arkansas 72201
501 374 5610

Structural Engineer

LESLIE E. ROBERTSON ASSOC , RLLP
30 Broad Street, 47th Floor
New York, New York 10004
212 750 9000

MEP Engineers

FLACK + KURTZ Inc.
475 Fifth Avenue
New York, New York 10017
212 532.9600

CROMWELL ARCHITECTS ENGINEERS
101 South Spring Street
Little Rock, Arkansas 72201
501 372.2900

Elevator Consultants

IROS ELEVATOR DESIGN SERVICES
10 Stuyvesant Avenue
Lyndhurst, New Jersey 07071
1 201 933 6078

Seal

Issue	Date
100% Construction Documents	09/27/02
90% Progress Printing	08/30/02
CD PROGRESS PRINTING	07/01/02
100% BSMT & GRND FLR.	06/14/02
STRUCTURAL ISSUE	
100% DD SUBMISSION	03/01/02

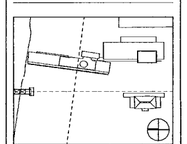

Job No 9908

Scale 1/4" = 1'-0"

Date September 27, 2002

Title

ESCALATOR PLANS

Sheet No

A521

FOR OFFICIAL USE ONLY

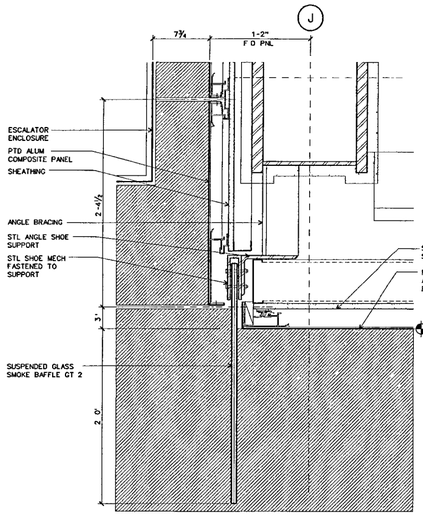

DETAIL AT SMOKE BAFFLE

SCALE 1-1/2 " = 1-0" d-escalator-dtls 32

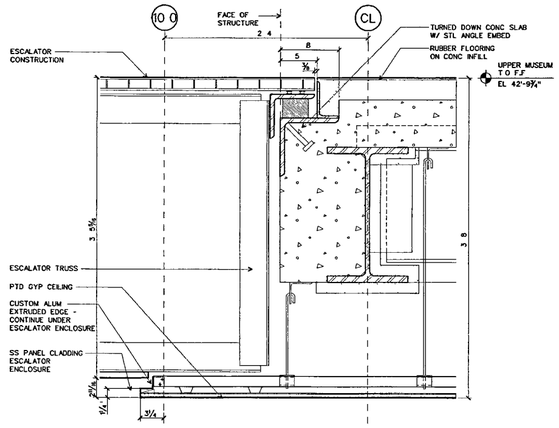

SILL DETAIL AT UPPER MUSEUM LEVEL

SCALE 1-1/2 " = 1-0" d-escalator-dtls 31

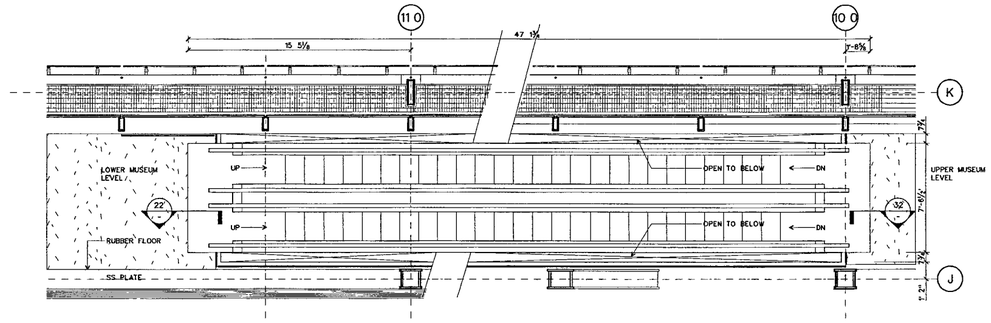

PLAN DETAIL AT ESCALATOR 2 - LOWER MUSEUM LEVEL TO UPPER MUSEUM LEVEL

SCALE ¼" = 1-0" d-escalator-dtls 40

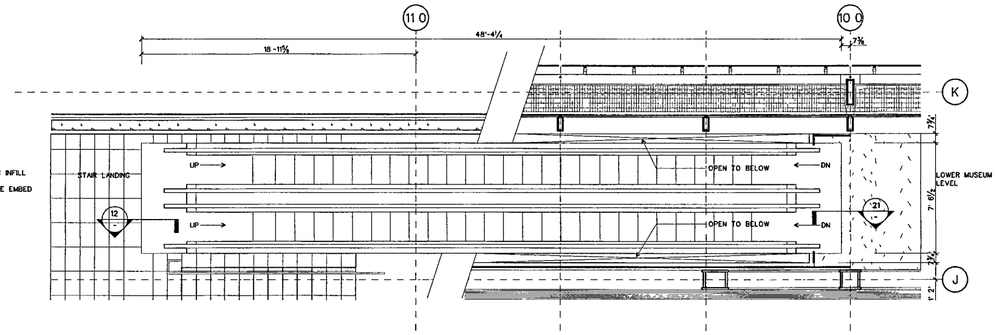

PLAN DETAIL AT ESCALATOR 1 - GROUND FLOOR TO LOWER MUSEUM LEVEL

SCALE ¼ = 1-0 d-escalator-dtls 30

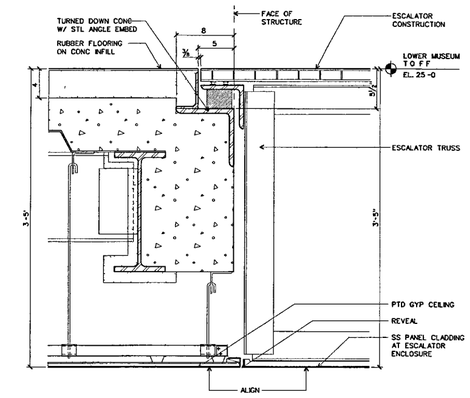

SILL DETAIL AT LOWER MUSEUM LEVEL

SCALE 1-1/2 = 1-0" d-escalator-dtls 22

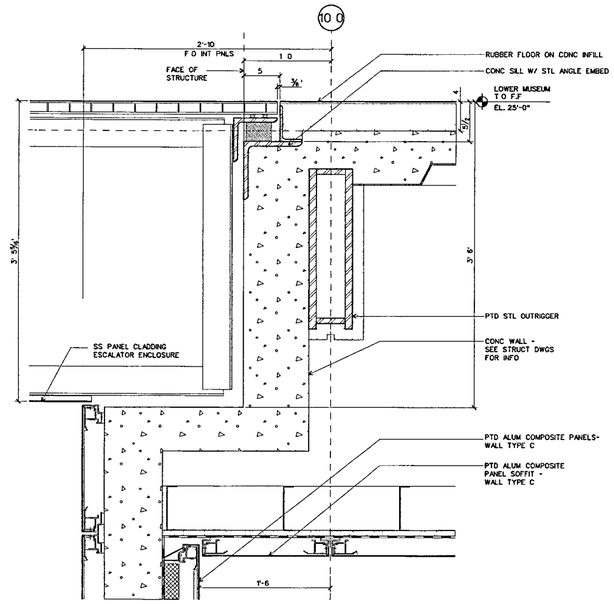

SILL DETAIL AT LOWER MUSEUM LEVEL

SCALE 1-1/2 = 1'-0 d-escalator-dtls 21

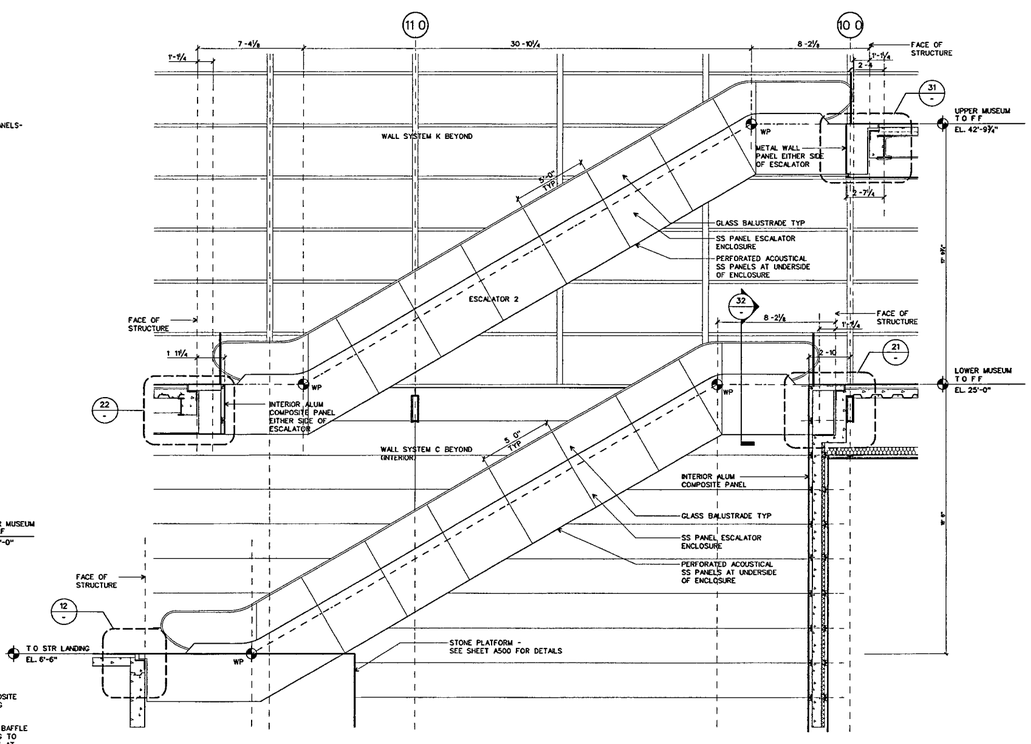

DETAIL SECTION OF ESCALATORS LOOKING WEST

SCALE ¼ = 1-0" d-escalator-dtls 10

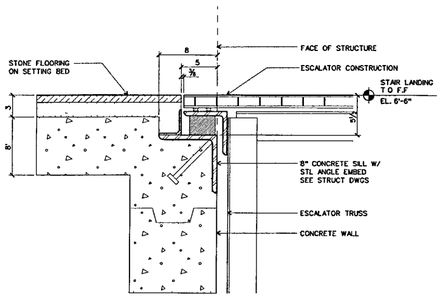

SILL DETAIL AT STAIR LANDING

SCALE 1-1/2" = 1-0 d-escalator-dtls 12

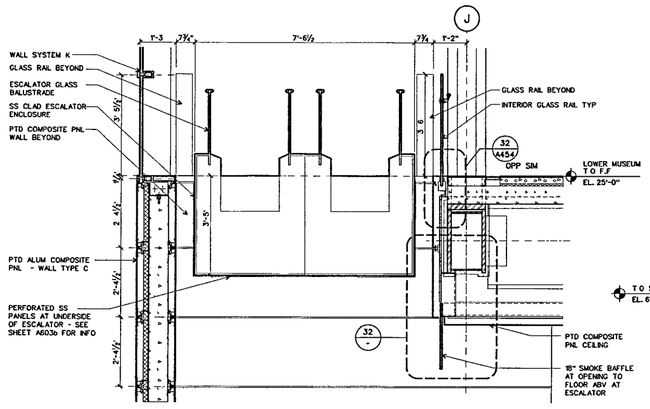

DETAIL SECTION AT LOWER ESCALATOR

SCALE ½" = 1-0 d-escalator-dtls 11

WILLIAM J CLINTON PRESIDENTIAL CENTER

LITTLE ROCK, ARKANSAS

Architect

POLSHEK PARTNERSHIP LLP
320 West 13th Street
New York, New York 10014
212.807 7171

Coordinating Architects

POLK STANLEY YEARY ARCHITECTS Ltd
700 South Schiller Street
Little Rock Arkansas 72201
501 378 0878

WITSELL EVANS RASCO
901 West Third Street
Little Rock, Arkansas 72201
501 374 5300

WOODS CARADINE ARCHITECTS
2200 South Main Street
Little Rock Arkansas 72206
501 374 4060

Landscape Architects

HARGREAVES ASSOCIATES
118 Magazine Street
Cambridge Massachusetts 02139
617 661 0070

LANDSCAPE ARCHITECTURE, Inc.
2300 Cottondale Lane Suite 202
Little Rock, Arkansas 72202
501 374 5810

Structural Engineer

LESLIE E. ROBERTSON ASSOC RLLP
30 Broad Street, 47th Floor
New York, New York 10004
212 750 9000

MEP Engineers

FLACK + KURTZ Inc.
475 Fifth Avenue
New York, New York 10017
212 532 9600

CROMWELL ARCHITECTS ENGINEERS
101 South Spring Street
Little Rock, Arkansas 72201
501 372 2900

Curtainwall Consultant

R A. HEINTGES ARCHITECTS
126 Fifth Avenue, 9th Floor
New York, New York 10011
212 652-2966

Seal

Issue	Date
100% Construction Documents	09/27/02

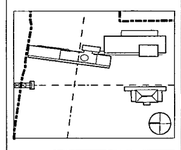

Job No 9908

Scale AS NOTED

Date September 27, 2002

Title

ESCALATOR PLANS AND DETAILS

Sheet No

A521.1

FOR OFFICIAL USE ONLY

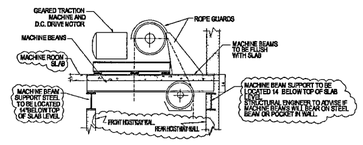

TYP SECTION THRU MACHINE SUPPORT

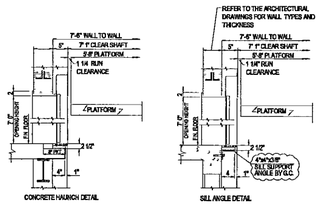

TYPICAL SILL SUPPORT DETAILS

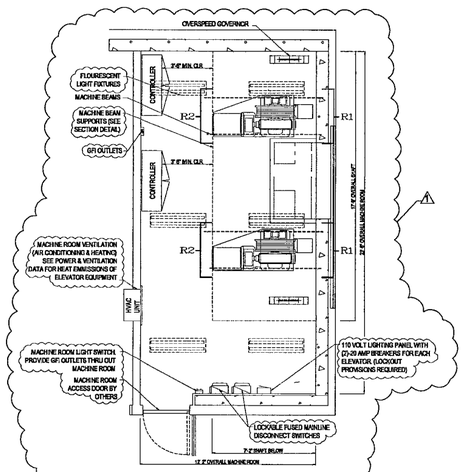

MACHINE ROOM PLAN
ELEVATORS P1 & P2

R1 (MACHINE BEAM)	2K KIPS
R2 (MACHINE BEAM)	2K KIPS

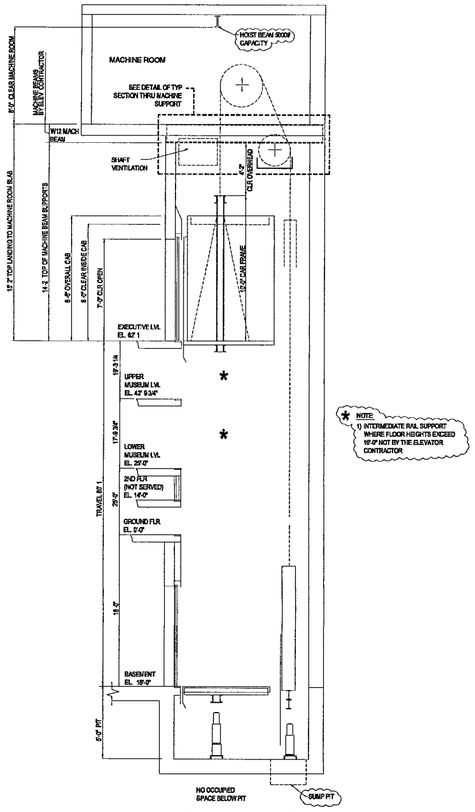

NOTE:
1) INTERMEDIATE RAIL SUPPORT WHERE FLOOR HEIGHTS EXCEED 15'-0" NOT BY THE ELEVATOR CONTRACTOR

SECTION ELEVATION
ELEVATORS P1 & P2

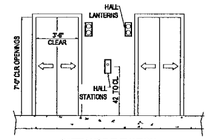

ENTRANCE ELEVATION
ELEVATORS P1 & P2

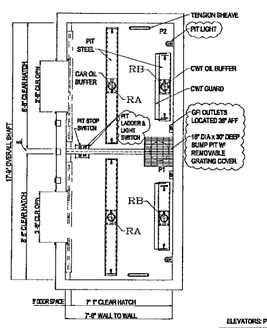

PIT PLAN
ELEVATORS P1 & P2

TABLE OF ESTIMATED PIT REACTIONS

RA (CAR BUFFER)	31.6 KIPS
RB (CWT BUFFER)	34.6 KIPS

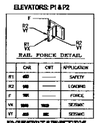

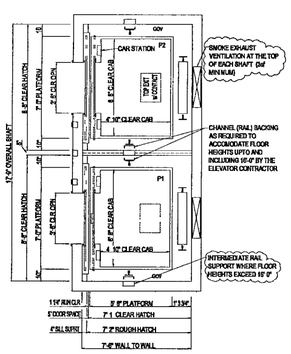

HOISTWAY PLAN
ELEVATORS P1 & P2

PASSENGER ELEVATORS P1 AND P2

3,000 LB. CAPACITY @ 350 F.P.M.
OVERHEAD TRACTION ELEVATORS

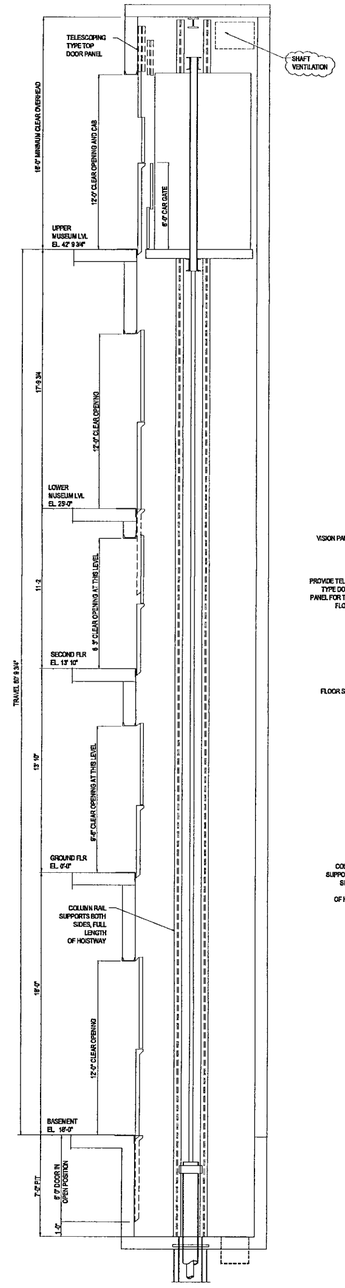

SECTION ELEVATION
ELEVATOR F3

ELEVATOR SUMMARY **

ELEVATOR NO.	P1 AND P2	F3	S4	F5	P6	P7
BRIEF SCOPE	TRACTION / DUPLEX	HYDRO/CONVENTIONAL	HYDRO/CONVENTIONAL	HYDRO/CONVENTIONAL	HYDRO/CONVENTIONAL	HYDRO / HOLESS
TYPE	PASSENGER	FREIGHT	PASSENGER/SERVICE	FREIGHT	PASSENGER	PASSENGER
CAPACITY	3000 LBS	6000 LBS / CLASS C-3	4000 LBS / CLASS A	6000 LBS / CLASS C-3	3000 LBS / CLASS A	2000 LBS
SPEED	350 FPM	150 FPM	100 FPM	100 FPM	150 FPM	100 FPM
FLOORS SERVED	B, G, LML, UML, EXEC LVL (ALL FRONT OPENINGS)	B, G, 2, LML, UML, (ALL FRONT OPENINGS)	B, G (FRONT @ B, SIDE @ G	B, G, (ALL FRONT OPENINGS)	B, G, 2, 3 FRONT @ B REAR @ G,2,3	LML, UML (ALL FRONT OPENINGS)
TRAVEL	78' 1"	56'-0 3/4"	18'-0"	18' 0"	44'-3"	17' 9 3/4"
CAB	(ALLIWANCE) $25,000 EACH	FREIGHT TYPE	STAINLESS STEEL	FREIGHT TYPE	(ALLOWANCE) $15,000	(ALLOWANCE) $20,000
OPERATION	DUPLEX SELEC COLL	SIMPLEX SELEC COLL	TWO STOP COLLECTIVE	TWO STOP COLLECTIVE	SIMPLEX SELEC COLL	TWO STOP COLL
CONTROL	VVVF-AC	AC FOR HYDRAULICS	AC FOR HYDRAULICS	AC FOR HYDRAULICS	AC FOR HYDRAULICS	AC FOR HYDRAULICS
GUIDE SHOES	ROLLER TYPE	SLIDE SHOES	SLIDE SHOES	SLIDE SHOES	SLIDE SHOES	SLIDE SHOES
CAR/CWT BUFFERS	OIL	SPRING	SPRING	SPRING	SPRING	SPRING
ENTRANCE TYPE	PASSENGER TYPE	FREIGHT	PASSENGER TYPE	FREIGHT	PASSENGER TYPE	PASSENGER TYPE
DOOR OPERATION	CENTER OPENING	POWER BI-PARTING	SIDE SLIDING	POWER BI-PARTING	SIDE SLIDING	SIDE SLIDING

** REFER TO SPECIFICATIONS & ARCHITECTURAL DRAWINGS FOR DETAILS

POWER AND VENTILATION DATA

	TRACTION ELEVATORS
ELEVATOR NO.	P1&2
CAPACITY (LBS)	3,000
SPEED (IN FEET/MINUTE)	350
ESTIMATED CAB WEIGHT (LBS)	2,500
ESTIMATED TOTAL CAR WEIGHT (LBS)	5,500
ESTIMATED COUNTERWEIGHT (LBS)	6,500
ESTIM HORSEPOWER (ea. ELEVATOR)	30
ESTIMATED HEAT EMMISIONS IN BTUS PER HOUR (ea. ELEVATOR)	15,000
EST FULL LOAD RUNNING AMPS 480V/3PH (ea. ELEVATOR)	56/115
EST FULL LOAD ACCELERATING AMPS 480V/3PH (ea. ELEVATOR)	115/250

HYDRAULIC ELEVATORS					
ELEVATOR NO.	F3	S4	F5	P6	P7
CAPACITY (LBS)	6,000	4,000	6,000	3,000	2,000
SPEED (IN FEET/MINUTE)	150	100	100	130	100
ESTIMATED CAB WEIGHT (LBS)	3,500	2,000	3,500	2,000	1,800
ESTIMATED TOTAL CAR WEIGHT (LBS)	6,800	4,800	6,800	4,800	3,800
ESTIMATED GROSS LOAD (LBS)	14,800	9,600	13,600	8,000	6,400
ESTIM HORSEPOWER (ea. ELEVATOR)	75	40	80	50	30
ESTIMATED HEAT EMMISIONS IN BTUS PER HOUR (ea. ELEVATOR)	34,000	17,000	26,000	20,000	15,000
EST FULL LOAD RUNNING AMPS 480V/3PH (ea. ELEVATOR)	110/220	60/120	75/170	80/140	40/90
EST FULL LOAD STARTING AMPS 480V/3PH (ea. ELEVATOR)	290/660**	160/360**	220/500**	190/430**	120/270**

** WITH SOLID STATE REDUCED VOLTAGE STARTING BY THE ELEVATOR CONTRACTOR
SEE RELATED WORK DOCUMENT FOR ADDITIONAL REQUIREMENTS.

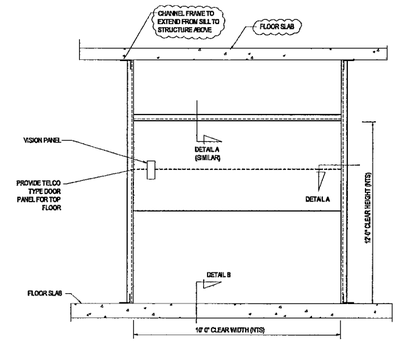

ENTRANCE ELEVATION
ELEVATOR F3

NOTE:
IT IS RECOMMENDED THAT THE CHANNEL FRAME BE INSTALLED OFF THE MOVING PLATFORM TO ASSURE ACCURACY IN INSTALLATION.

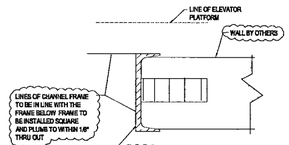

DETAIL A

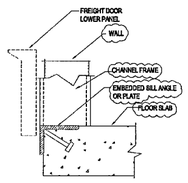

DETAIL B

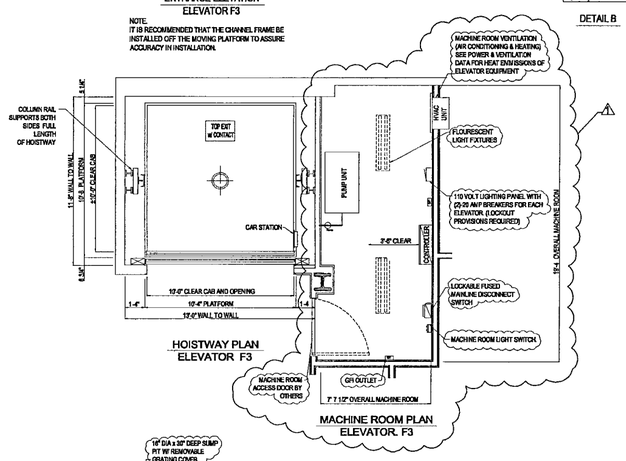

HOISTWAY PLAN
ELEVATOR F3

MACHINE ROOM PLAN
ELEVATOR F3

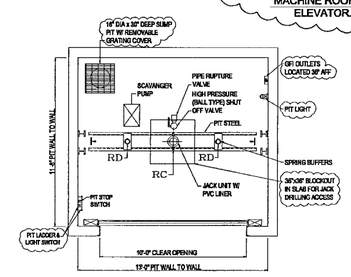

PIT PLAN
ELEVATOR F3

TABLE OF ESTIMATED PIT REACTIONS

RC (CAR CHUNDER)	30 KIPS
RD (CAR BUFFER EACH)	24 KIPS

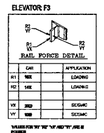

FREIGHT ELEVATOR F3

6,000 LB. CAPACITY @ 150 F.P.M.
CONVENTIONAL HYDRAULIC ELEVATOR

INDICATES WORK TYPICALLY NOT INCLUDED IN THE ELEVATOR SCOPE OF WORK

FOR OFFICIAL USE ONLY

WILLIAM J. CLINTON PRESIDENTIAL CENTER

LITTLE ROCK, ARKANSAS

Architect

POLSHEK PARTNERSHIP LLP
320 West 13th Street
New York, New York 10014
212.807 7171

Coordinating Architects

POLK STANLEY YEARY ARCHITECTS Ltd
700 South Schiller Street
Little Rock, Arkansas 72201
501 378 0878

WITSELL EVANS & RASCO
124 West Capitol Avenue, Suite 1750
Little Rock, Arkansas 72201
501 374 5300

WOODS CARADINE ARCHITECTS
2200 South Main Street
Little Rock, Arkansas 72206
501 374 4060

Landscape Architects

HARGREAVES ASSOCIATES
118 Magazine Street
Cambridge, Massachusetts 02139
617 661 0070

LANDSCAPE ARCHITECTURE, Inc.
400 West Capitol Avenue
Suite 1600 Regions Center
Little Rock, Arkansas 72201
501 374 5610

Structural Engineer

LESLIE E ROBERTSON ASSOC , RLLP
30 Broad Street, 47th Floor
New York, New York 10004
212.750 9000

MEP Engineers

FLACK + KURTZ Inc.
475 Fifth Avenue
New York, New York 10017
212.532 9600

CROMWELL ARCHITECTS ENGINEERS
101 South Spring Street
Little Rock, Arkansas 72201
501 372.2900

Elevator Consultants

IROS ELEVATOR DESIGN SERVICES
10 Stuyvesant Avenue
Lyndhurst, New Jersey 07071
1 201 933.6078

Seal

Issue	Date
100% Construction Documents	09/27/02
90% Progress Printing	08/30/02
CD PROGRESS PRINTING	07/01/02
100% SSNT & GRND FLR.	06/14/02
STRUCTURAL ISSUE	
100% DD SUBMISSION	03/01/02

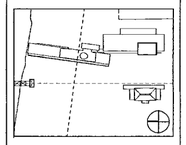

Job No. 9908

Scale 1/4" = 1'-0"

Date September 27, 2002

Title ELEVATOR LAYOUT

Sheet No. A522

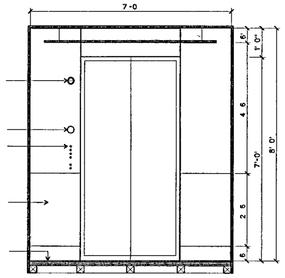

WEST

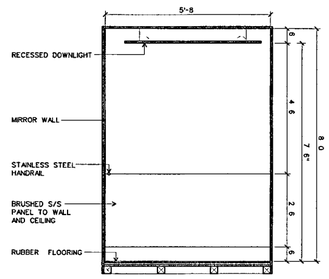

SOUTH

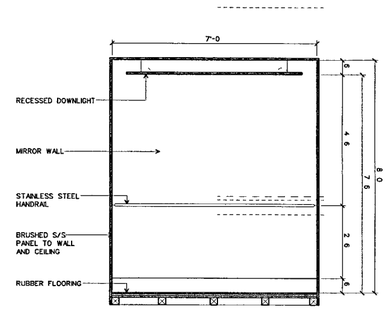

EAST

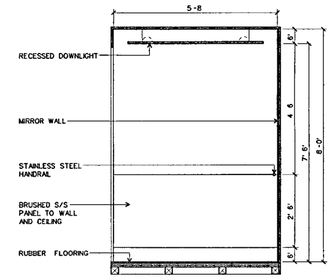

NORTH

INTERIOR CAB ELEVATIONS

SCALE ½" = 1'-0 D-ELEVATORP1.DGN 31

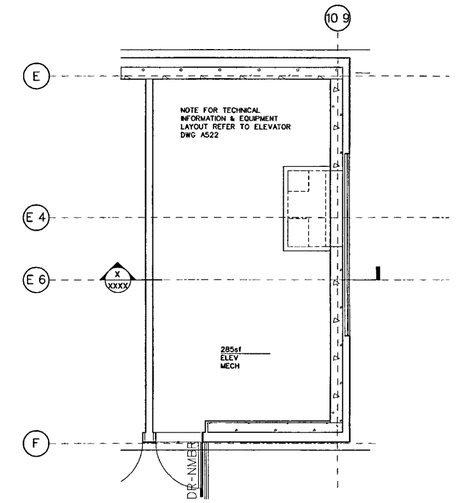

ELEVATOR P1 & P2 MACHINE ROOM PLAN

SCALE ¼" = 1'-0" D-ELEVATORP1.DGN 30

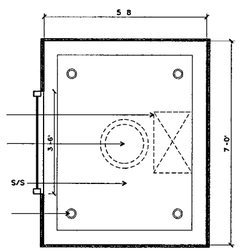

REFLECTED CAB CEILING PLAN

SCALE ½" = 1'-0 D-ELEVATORP1.DGN 23

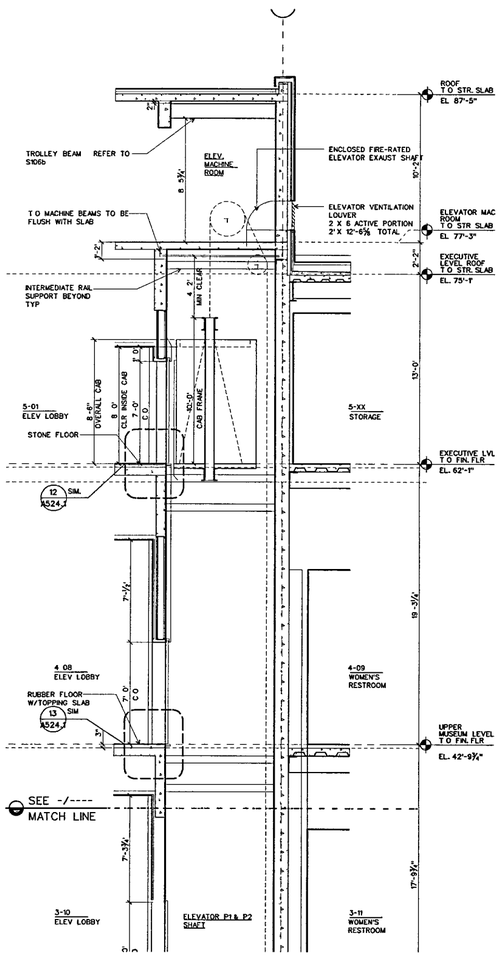

SECTION ELEVATION: LWR MUSEUM LVL TO MACHINE RM LVL

SCALE ¼" = 1'-0 D-ELEVATORP1.DGN 12

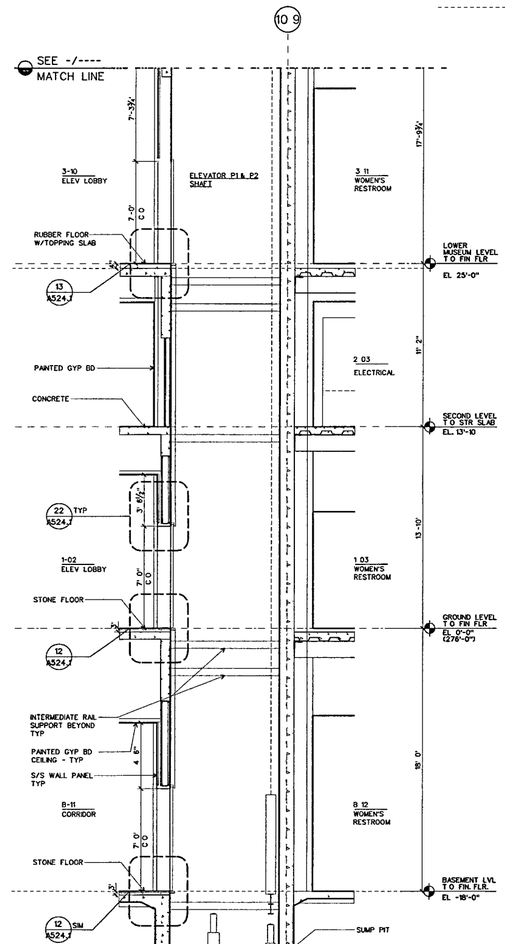

SECTION ELEVATION: BASEMENT TO LWR MUSEUM LEVEL

SCALE ¼" = 1'-0 D-ELEVATORP1.DGN 11

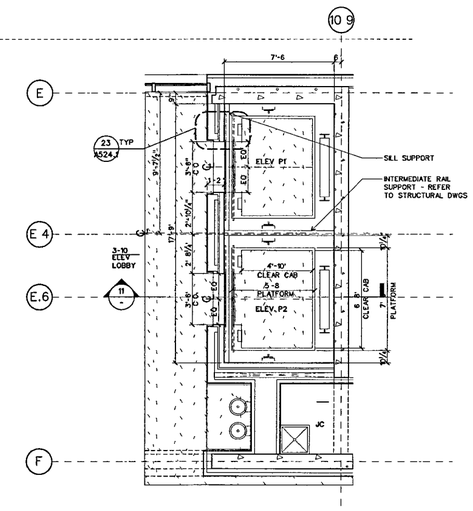

TYP. ELEVATOR HOISTWAY PLAN

SCALE ¼" = 1'-0" D-ELEVATORP1.DGN 20

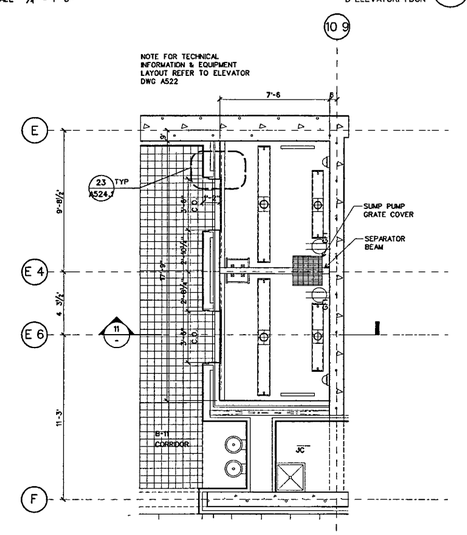

ELEVATOR PIT PLAN

SCALE ¼" = 1'-0" D-ELEVATORP1.DGN 10

WILLIAM J CLINTON PRESIDENTIAL CENTER

LITTLE ROCK, ARKANSAS

Architect

POLSHEK PARTNERSHIP LLP
320 West 13th Street
New York, New York 10014
212 807 7171

Coordinating Architects

POLK STANLEY YEARY ARCHITECTS Ltd
700 South Schiller Street
Little Rock, Arkansas 72201
501 378 0878

WITSELL EVANS RASCO
901 West Third Street
Little Rock Arkansas 72201
501 374 5300

WOODS CARADINE ARCHITECTS
2200 South Main Street
Little Rock Arkansas 72206
501 374 4060

Landscape Architects

HARGREAVES ASSOCIATES
118 Magazine Street
Cambridge Massachusettes 02139
617 661 0070

LANDSCAPE ARCHITECTURE Inc.
2300 Cottondale Lane Suite 202
Little Rock, Arkansas 72202
501 374 5610

Structural Engineer

LESLIE E ROBERTSON ASSOC RLLP
30 Broad Street, 47th Floor
New York New York 10004
212 750 9000

MEP Engineers

FLACK + KURTZ Inc.
475 Fifth Avenue
New York, New York 10017
212 532 9600

CROMWELL ARCHITECTS ENGINEERS
101 South Spring Street
Little Rock Arkansas 72201
501 372 2900

Curtainwall Consultant

R. A. HEINTGES ARCHITECTS
126 Fifth Avenue, 9th Floor
New York, New York 10011
212.632-2966

Seal

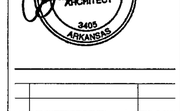

Issue	Date
100% Construction Documents	09/27/02
90% Progress Printing*	08/30/02
100% Struct./ CD Progress*	07/01/02

*Issued orginally as A440

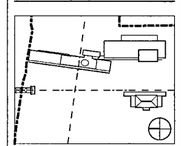

Job No 9908

Scale AS NOTED

Date September 27, 2002

Title ELEVATOR P1/P2 PLANS, SECTIONS INTERIOR ELEVATIONS

Sheet No A522.1

FOR OFFICIAL USE ONLY

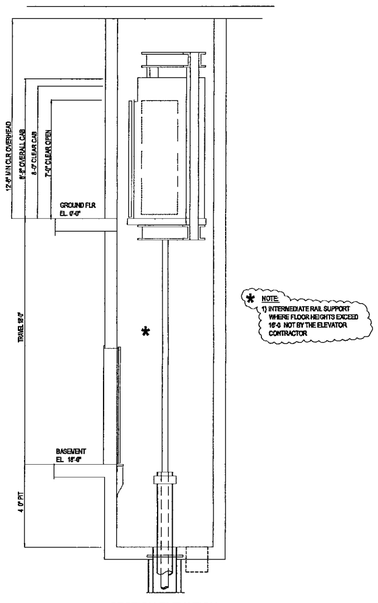

SECTION ELEVATION
ELEVATOR S4

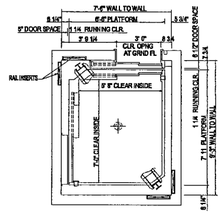

HOISTWAY PLAN @ G
ELEVATOR S4

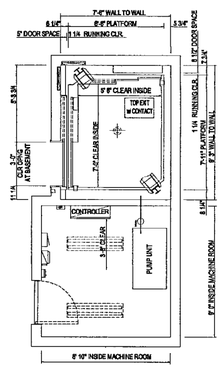

HOISTWAY PLAN @ B
& MACHINE ROOM PLAN
ELEVATOR S4

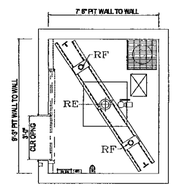

PIT PLAN
ELEVATOR. S4

TABLE OF ESTIMATED PIT REACTIONS

RE (CAR CRUSHER)	21 KIPS
RF (CAR BUFFER) EACH	12 KIPS

ELEVATOR: S4

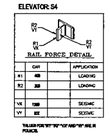

	CAR	APPLICATION
R1	400	LOADING
R2	200	LOADING
V1	1500	SEISMIC
V1	400	SEISMIC

VALUES FOR "R1" "R2" "V1" AND "V1" ARE IN POUNDS

ENTRANCE ELEVATION
@ BASEMENT LEVEL
ELEVATOR S4

ENTRANCE ELEVATION
@ GROUND LEVEL
ELEVATOR S4

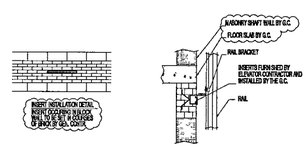

RAIL INSERT DETAILS

SEE SHEET No. A522
FOR TYPICAL NOTES

SERVICE ELEVATOR S4
4,000 LB. CAPACITY @ 100 F.P.M.
CONVENTIONAL HYDRAULIC ELEVATOR

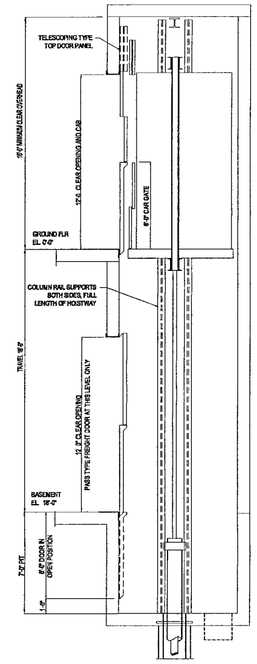

SECTION ELEVATION
ELEVATOR F5

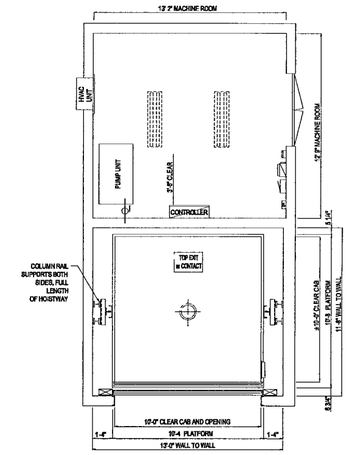

HOISTWAY PLAN
MACHINE ROOM PLAN
ELEVATOR F5

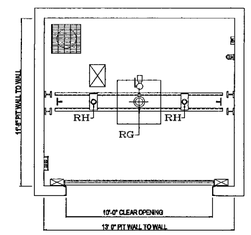

PIT PLAN
ELEVATOR. F5

TABLE OF ESTIMATED PIT REACTIONS

RG (CAR CRUSHER)	28 KIPS
RH (CAR BUFFER) EACH	24 KIPS

ELEVATOR: F5

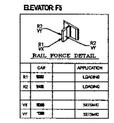

	CAR	APPLICATION
R1	1000	LOADING
R2	2000	LOADING
V1	1000	SEISMIC
V1	1000	SEISMIC

VALUES FOR "R1" "R2" "V1" AND "V1" ARE IN POUNDS

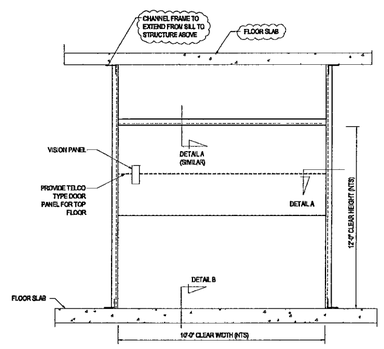

ENTRANCE ELEVATION
ELEVATOR F5

NOTE:
IT IS RECOMMENDED THAT THE CHANNEL FRAME BE INSTALLED OFF THE MOVING PLATFORM TO ASSURE ACCURACY IN INSTALLATION.

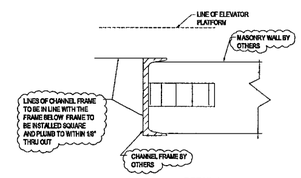

DETAIL A

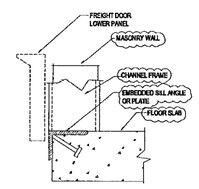

DETAIL B

SEE SHEET No. A522
FOR TYPICAL NOTES

FREIGHT ELEVATOR F5
6,000 LB. CAPACITY @ 100 F.P.M.
CONVENTIONAL HYDRAULIC ELEVATOR

INDICATES WORK TYPICALLY NOT INCLUDED IN THE ELEVATOR SCOPE OF WORK

FOR OFFICIAL USE ONLY

WILLIAM J. CLINTON PRESIDENTIAL CENTER

LITTLE ROCK, ARKANSAS

Architect

POLSHEK PARTNERSHIP LLP
320 West 13th Street
New York, New York 10014
212 807 7171

Coordinating Architects

POLK STANLEY YEARY ARCHITECTS Ltd
700 South Schiller Street
Little Rock, Arkansas 72201
501 378.0878

WITSELL EVANS & RASCO
124 West Capitol Avenue, Suite 1750
Little Rock, Arkansas 72201
501 374 5300

WOODS CARADINE ARCHITECTS
2200 South Main Street
Little Rock, Arkansas 72206
501 374 4060

Landscape Architects

HARGREAVES ASSOCIATES
118 Magazine Street
Cambridge, Massachusettes 02139
617 661 0070

LANDSCAPE ARCHITECTURE, Inc.
400 West Capitol Avenue
Suite 1600 Regions Center
Little Rock, Arkansas 72201
501 374.5610

Structural Engineer

LESLIE E ROBERTSON ASSOC , RLLP
30 Broad Street, 47th Floor
New York, New York 10004
212 750 9000

MEP Engineers

FLACK + KURTZ Inc
475 Fifth Avenue
New York, New York 10017
212 532.9600

CROMWELL ARCHITECTS ENGINEERS
101 South Spring Street
Little Rock, Arkansas 72201
501 372.2900

Elevator Consultants

IROS ELEVATOR DESIGN SERVICES
10 Stuyvesant Avenue
Lyndhurst, New Jersey 07071
1 201 933 6078

Seal

Issue	Date
100% Construction Documents	09/27/02
90% Progress Printing	08/30/02
CD PROGRESS PRINTING	07/01/02
100% DD SUBMISSION	03/01/02

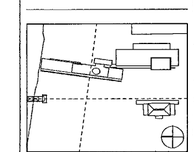

Job No
9908

Scale
1/4" = 1'-0"

Date
September 27, 2002

Title
ELEVATOR LAYOUT

Sheet No
A523

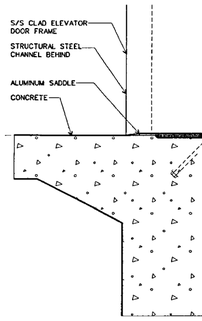

BASEMENT LVL FREIGHT ELEVATOR SILL (34)

SCALE 1-1/2 " =1'-0 D-ELEVATOR-DETAILS DGN

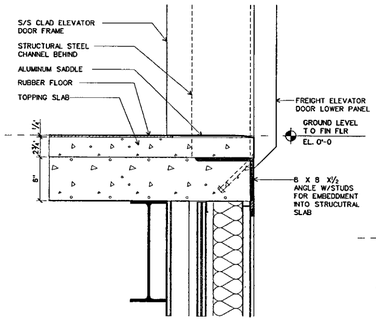

TYPICAL FREIGHT ELEVATOR SILL DETAIL (33)

SCALE 1-1/2 " =1-0 D-ELEVATOR-DETAILS DGN

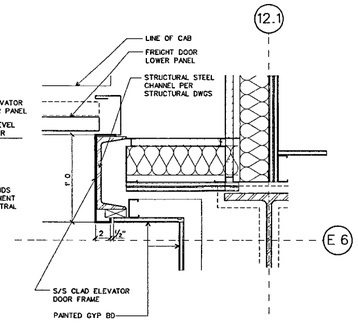

FREIGHT ELEVATOR JAMB DETAIL (32)

SCALE 1-1/2 " =1-0 D-ELEVATOR-DETAILS DGN

S/S CLAD ELEVATOR DOOR
S/S CLAD ELEVATOR

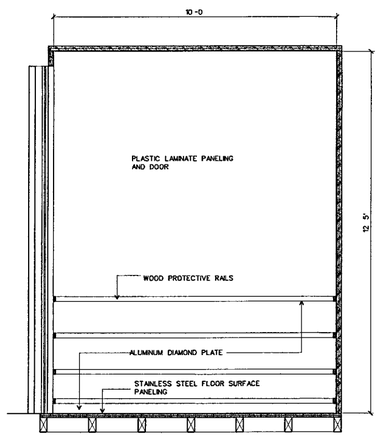

WEST

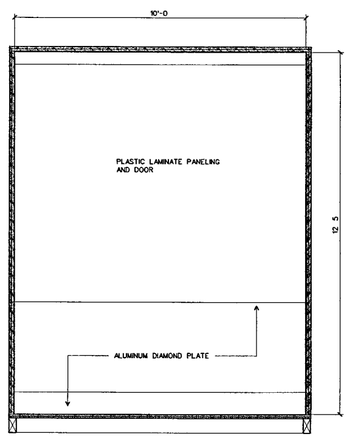

SOUTH

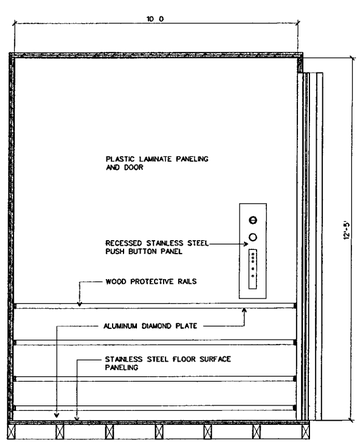

EAST

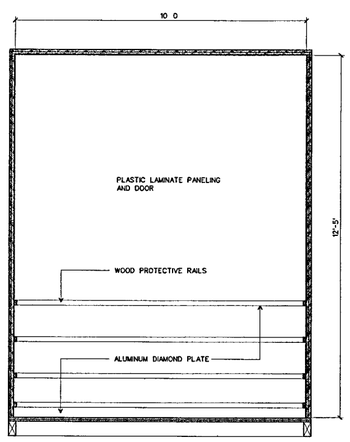

NORTH

INTERIOR CAB ELEVATIONS - ELEVATORS F3 & F5

SCALE ½" =1'-0" D-ELEVATORF3 DGN (12)

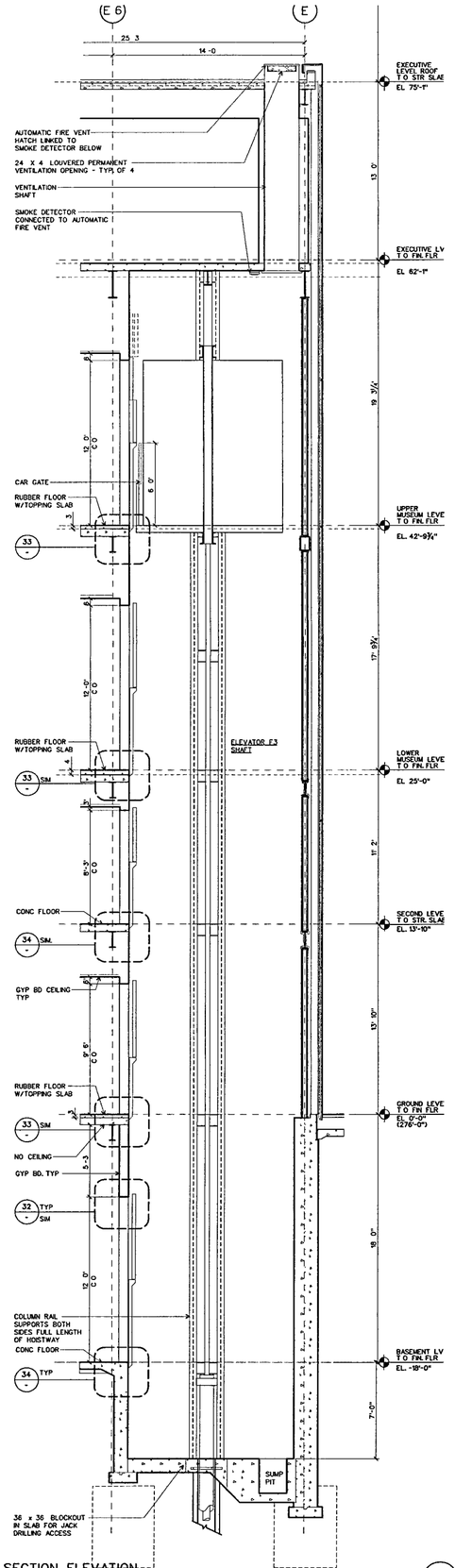

SECTION ELEVATION

SCALE ¼ =1-0 D-ELEVATORF3 DGN (11)

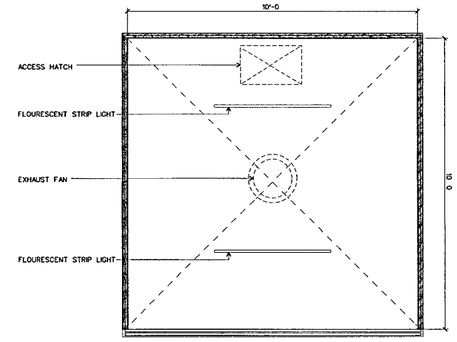

REFLECTED CAB CEILING PLAN

SCALE ½" =1'-0 D-ELEVATORF3 DGN (30)

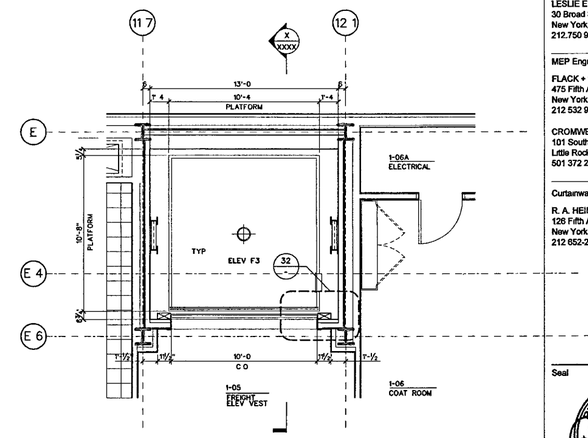

TYPICAL HOISTWAY PLAN

SCALE ¼ =1-0" D-ELEVATORF3 DGN (20)

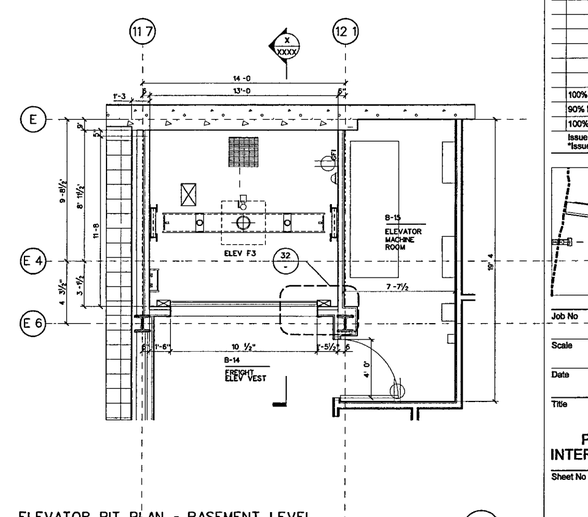

ELEVATOR PIT PLAN - BASEMENT LEVEL

SCALE ¼ =1-0 D-ELEVATORF3 DGN (10)

WILLIAM J. CLINTON PRESIDENTIAL CENTER

LITTLE ROCK, ARKANSAS

Architect

POLSHEK PARTNERSHIP LLP
320 West 13th Street
New York, New York 10014
212 807 7171

Coordinating Architects

POLK STANLEY YEARY ARCHITECTS Ltd
700 South Schiller Street
Little Rock, Arkansas 72201
501 378 0878

WITSELL EVANS RASCO
901 West Third Street
Little Rock, Arkansas 72201
501 374 5300

WOODS CARADINE ARCHITECTS
2200 South Main Street
Little Rock, Arkansas 72206
501 374 4060

Landscape Architects

HARGREAVES ASSOCIATES
118 Magazine Street
Cambridge, Massachusettes 02139
617 661 0070

LANDSCAPE ARCHITECTURE Inc.
2300 Cottondale Lane Suite 202
Little Rock, Arkansas 72202
501.374 5610

Structural Engineer

LESLIE E ROBERTSON ASSOC , RLLP
30 Broad Street, 47th Floor
New York, New York 10004
212.750 9000

MEP Engineers

FLACK + KURTZ Inc.
475 Fifth Avenue
New York, New York 10017
212 532 9600

CROMWELL ARCHITECTS ENGINEERS
101 South Spring Street
Little Rock, Arkansas 72201
501 372 2900

Curtainwall Consultant

R. A. HEINTGES ARCHITECTS
126 Fifth Avenue 9th Floor
New York, New York 10011
212 652-2966

Seal

Issue	Date
100% Construction Documents	09/27/02
90% Progress Printing*	08/30/02
100% Struct./ CD Progress*	07/01/02

*Issued originally as A441

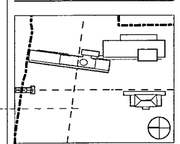

Job No 9908

Scale 1/4" = 1'-0"

Date September 27, 2002

Title

ELEVATOR F3 PLANS, SECTIONS, INTERIOR ELEVATIONS

Sheet No

A523.1

FOR OFFICIAL USE ONLY

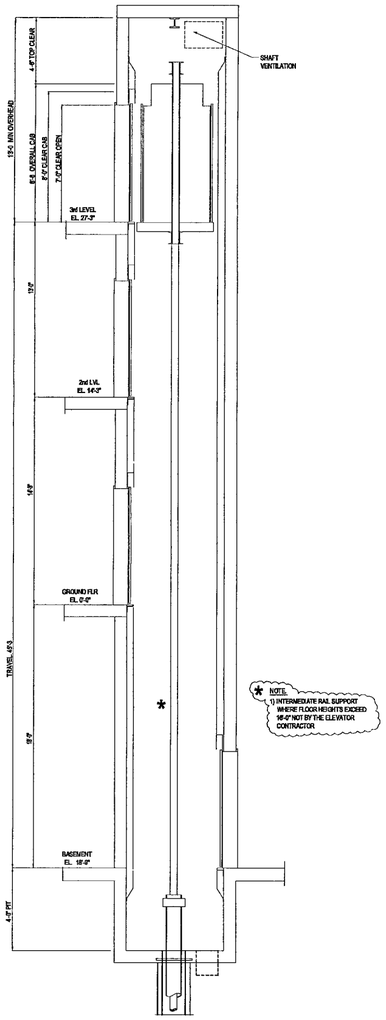

SECTION ELEVATION
ELEVATOR P6

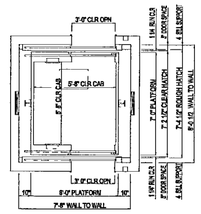

HOISTWAY PLAN @ TYP
ELEVATOR P6

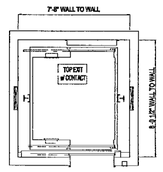

HOISTWAY PLAN @ G,2,&3
ELEVATOR P6

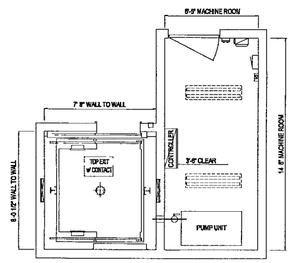

HOISTWAY PLAN @ B
& MACHINE ROOM PLAN
ELEVATOR. P6

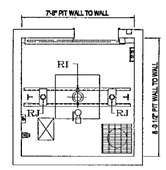

PIT PLAN
ELEVATOR P6

TABLE OF ESTIMATED PIT REACTIONS	
RI (CAR CYLINDER)	20 KIPS
RJ (CAR BUFFER) EACH	14 KIPS

ELEVATOR P6

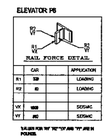

RAIL FORCE DETAIL

	CAR		APPLICATION
R1	50		LOADING
R2	30		LOADING
V1	100		SEISMIC
V2	40		SEISMIC

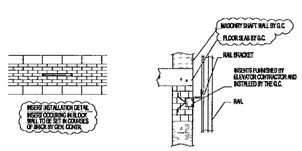

RAIL INSERT DETAILS

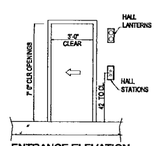

ENTRANCE ELEVATION
@ G,2,&3 LEVELS
ELEVATOR P6

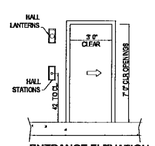

ENTRANCE ELEVATION
@ BASEMENT LEVEL
ELEVATOR P6

SEE SHEET No. A522
FOR TYPICAL NOTES

PASSEGER ELEVATOR P6
3,000 LB. CAPACITY @ 150 F.P.M.
CONVENTIONAL HYDRAULIC ELEVATOR

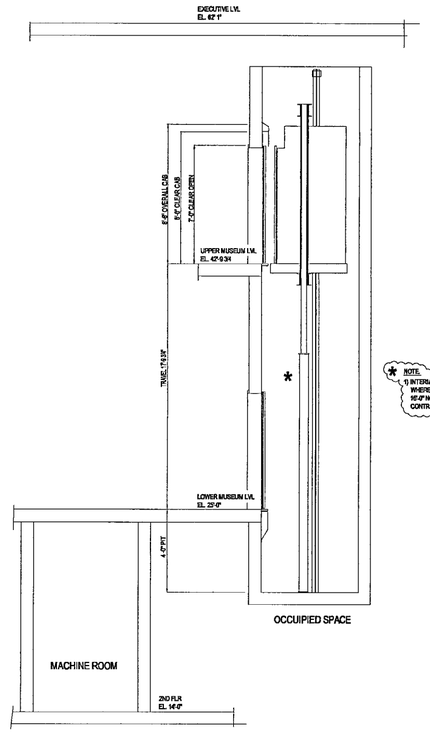

OCCUIPIED SPACE

SECTION ELEVATION
ELEVATOR P7

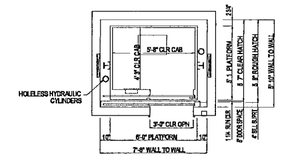

HOISTWAY PLAN
ELEVATOR P7

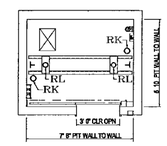

PIT PLAN
ELEVATOR. P7

TABLE OF ESTIMATED PIT REACTIONS	
RK (CAR CYLINDER)	7 KIPS EACH
RL (CAR BUFFER) EACH	10 KIPS

ELEVATOR P7

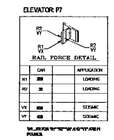

RAIL FORCE DETAIL

	CAR		APPLICATION
R1	20		LOADING
R2	10		LOADING
V1	60		SEISMIC
V2	40		SEISMIC

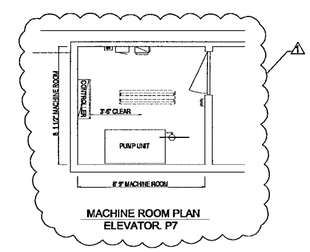

MACHINE ROOM PLAN
ELEVATOR. P7

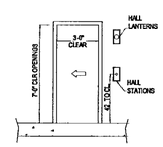

ENTRANCE ELEVATION
ELEVATOR P7

SEE SHEET No. A522
FOR TYPICAL NOTES

PASSEGER ELEVATOR P7
2,000 LB. CAPACITY @ 100 F.P.M.
HOLELESS HYDRAULIC ELEVATOR

INDICATES WORK TYPICALLY NOT INCLUDED IN THE ELEVATOR SCOPE OF WORK

FOR OFFICIAL USE ONLY

WILLIAM J. CLINTON PRESIDENTIAL CENTER

LITTLE ROCK, ARKANSAS

Architect

POLSHEK PARTNERSHIP LLP
320 West 13th Street
New York, New York 10014
212.807 7171

Coordinating Architects

POLK STANLEY YEARY ARCHITECTS Ltd
700 South Schiller Street
Little Rock, Arkansas 72201
501 378 0878

WITSELL EVANS & RASCO
124 West Capitol Avenue, Suite 1750
Little Rock, Arkansas 72201
501 374 5300

WOODS CARADINE ARCHITECTS
2200 South Main Street
Little Rock, Arkansas 72206
501 374 4050

Landscape Architects

HARGREAVES ASSOCIATES
118 Magazine Street
Cambridge, Massachusettes 02139
617 661 0070

LANDSCAPE ARCHITECTURE, Inc.
400 West Capitol Avenue
Suite 1600 Regions Center
Little Rock, Arkansas 72201
501 374 5610

Structural Engineer

LESLIE E ROBERTSON ASSOC., RLLP
30 Broad Street, 47th Floor
New York, New York 10004
212.750 9000

MEP Engineers

FLACK + KURTZ Inc.
475 Fifth Avenue
New York, New York 10017
212 532 9600

CROMWELL ARCHITECTS ENGINEERS
101 South Spring Street
Little Rock, Arkansas 72201
501 372.2900

Elevator Consultants

IROS ELEVATOR DESIGN SERVICES
10 Stuyvesant Avenue
Lyndhurst, New Jersey 07071
1 201 933.6076

Seal

Issue	Date
100% Construction Documents	09/27/02
90% Progress Printing	08/30/02
CD PROGRESS PRINTING	07/01/02
100% DD SUBMISSION	03/01/02

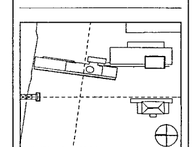

Job No 9908

Scale 1/4" = 1'-0"

Date September 27, 2002

Title ELEVATOR LAYOUT

Sheet No A524

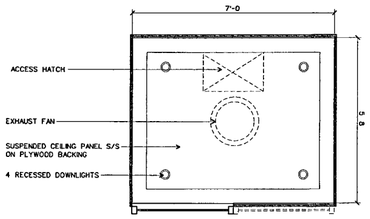

REFLECTED CAB CEILING PLAN

SCALE ½ = 1-0 D-ELEVATORP7 DGN 43

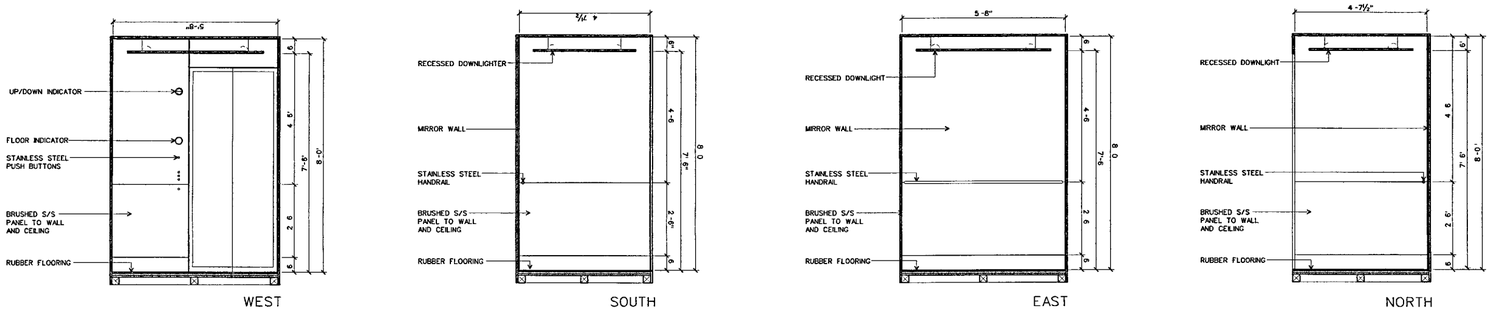

INTERIOR CAB ELEVATIONS

SCALE ½ = 1-0 D-ELEVATORP7 DGN 40

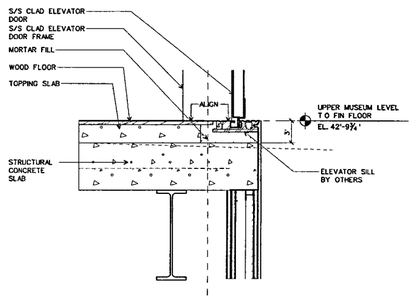

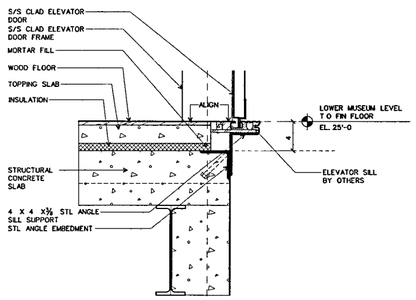

SILL DETAIL-ELEVATOR P7

SCALE ¼' = 1-0" D-ELEVATOR-DETAILS DGN 32

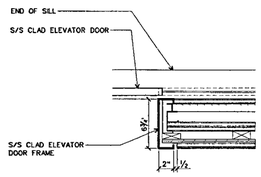

JAMB DETAIL-ELEVATOR P7

SCALE ¼' = 1-0' D-ELEVATOR-DETAILS DGN 31

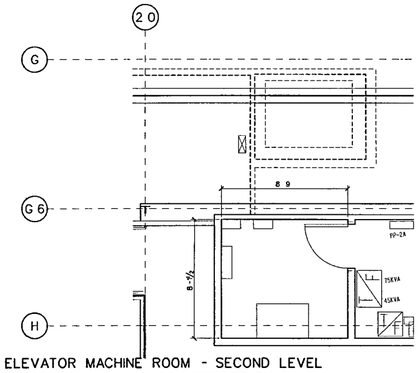

ELEVATOR MACHINE ROOM - SECOND LEVEL

SCALE ¼' = 1-0 D-ELEVATORP7 DGN 30

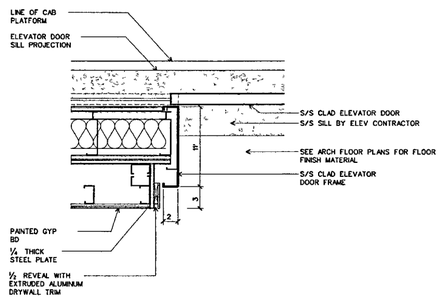

TYPICAL JAMB DETAIL - ELEVATOR P1/P2

SCALE 1-1/2 " = 1'-0" D-ELEVATOR-DETAILS DGN 23

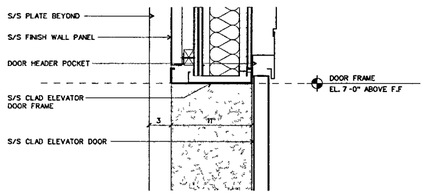

TYPICAL HEADER DETAIL - ELEVATOR P1/P2

SCALE 1-1/2 " = 1-0' D-ELEVATOR-DETAILS DGN 22

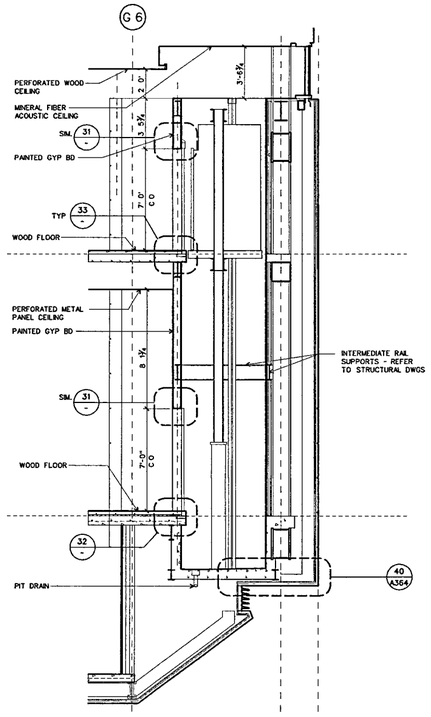

SECTION ELEVATION

SCALE ¼' = 1-0 D-ELEVATORP7 DGN 11

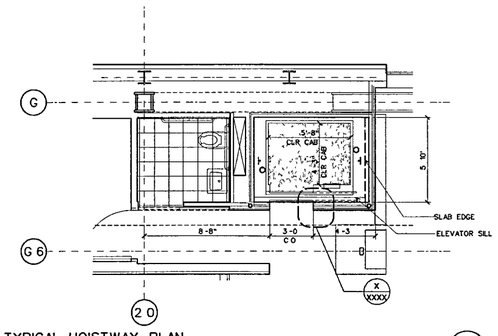

TYPICAL HOISTWAY PLAN

SCALE ¼' = 1-0" D-ELEVATORP7 DGN 20

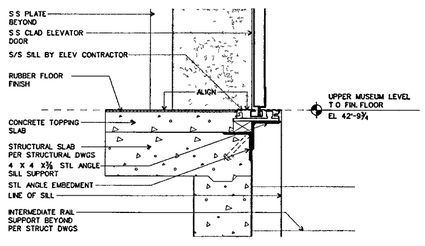

TYPICAL SILL DETAIL W/RUBBER FLOOR - ELEVATOR P1/P2

SCALE 1-1/2 " = 1-0' D-ELEVATOR-DETAILS DGN 13

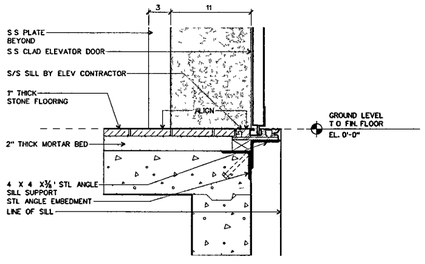

TYPICAL SILL DETAIL W/STONE FLOOR - ELEVATOR P1/P2

SCALE 1-1/2 " = 1-0" D-ELEVATOR-DETAILS DGN 12

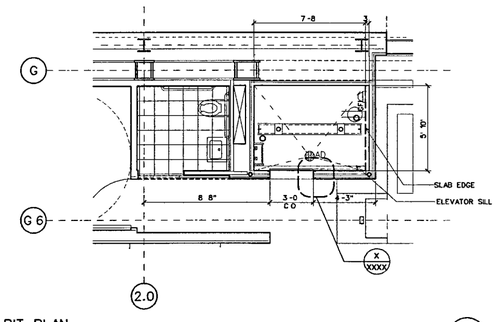

PIT PLAN

SCALE ¼' = 1'-0 D-ELEVATORP7 DGN 10

WILLIAM J CLINTON PRESIDENTIAL CENTER

LITTLE ROCK, ARKANSAS

Architect

POLSHEK PARTNERSHIP LLP
320 West 13th Street
New York, New York 10014
212 807 7171

Coordinating Architects

POLK STANLEY YEARY ARCHITECTS Ltd
700 South Schiller Street
Little Rock, Arkansas 72201
501 378 0878

WITSELL EVANS RASCO
901 West Third Street
Little Rock Arkansas 72201
501 374 5300

WOODS CARADINE ARCHITECTS
2200 South Main Street
Little Rock, Arkansas 72206
501 374 4060

Landscape Architects

HARGREAVES ASSOCIATES
118 Magazine Street
Cambridge Massachusettes 02139
617 661 0070

LANDSCAPE ARCHITECTURE Inc.
2300 Cottondale Lane Suite 202
Little Rock, Arkansas 72202
501 374 5610

Structural Engineer

LESLIE E. ROBERTSON ASSOC RLLP
30 Broad Street, 47th Floor
New York, New York 10004
212 750 9000

MEP Engineers

FLACK + KURTZ Inc
475 Fifth Avenue
New York, New York 10017
212 532 9600

CROMWELL ARCHITECTS ENGINEERS
101 South Spring Street
Little Rock, Arkansas 72201
501 372.2900

Curtainwall Consultant

R. A. HEINTGES ARCHITECTS
126 Fifth Avenue 9th Floor
New York, New York 10011
212 652-2968

Seal

RICHARD OLCOTT REGISTERED ARCHITECT 3405 ARKANSAS

Issue	Date
100% Construction Documents	09/27/02
90% Progress Printing*	08/30/02
100% Struct./ CD Progress*	07/01/02

*Issued originally as A440

Job No 9908

Scale AS NOTED

Date September 27, 2002

Title ELEVATOR P7 PLANS, SECTIONS, INTERIOR ELEVATIONS

Sheet No A524.1

FOR OFFICIAL USE ONLY

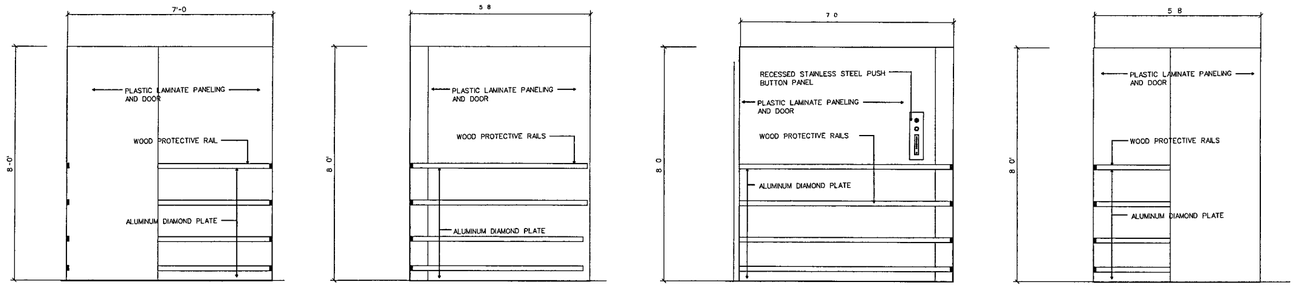

INTERIOR CAB ELEVATIONS (41)

SCALE 1/2 " =1'-0"

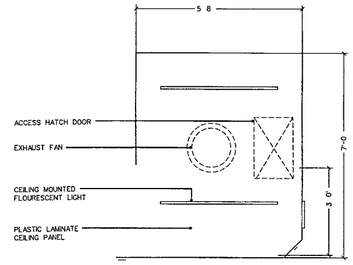

REFLECTED CAB CEILING PLAN (40)

SCALE 1/2 " =1'-0"

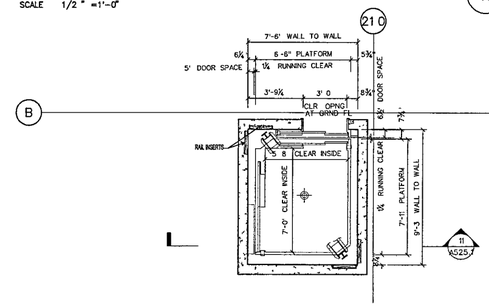

TYPICAL HOISTWAY PLAN (30)

SCALE. 1/4 " =1'-0"

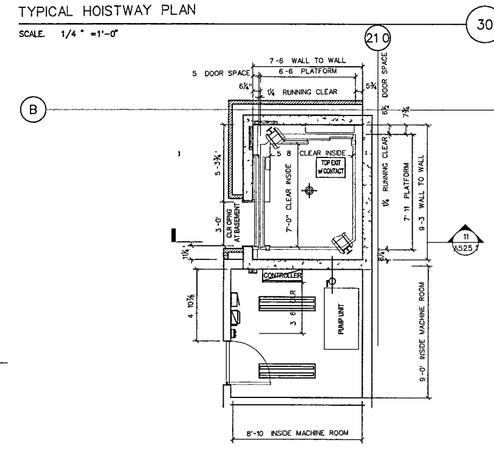

ELEVATOR HOISTWAY PLAN - BASEMENT LEVEL (20)

SCALE. 1/4 " =1'-0"

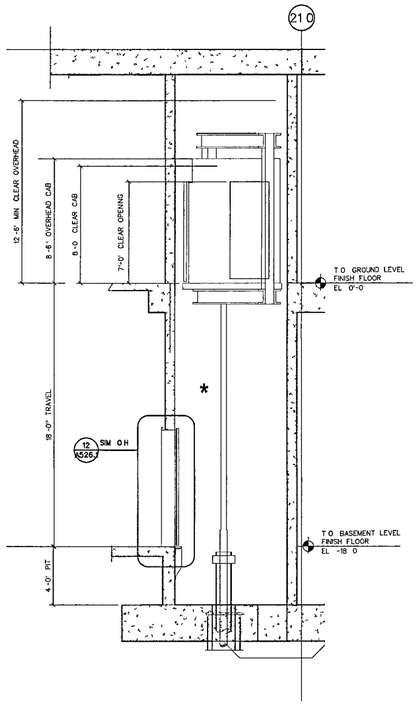

SECTION ELEVATION (11)

SCALE 1/4 " =1'-0"

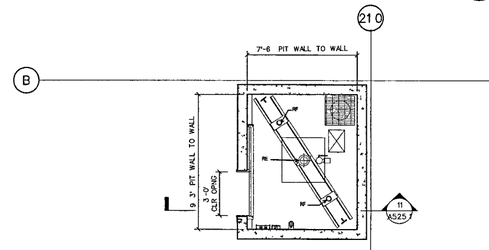

ELEVATOR PIT PLAN (10)

SCALE 1/4 " =1'-0"

WILLIAM J. CLINTON PRESIDENTIAL CENTER

LITTLE ROCK, ARKANSAS

Architect

POLSHEK PARTNERSHIP LLP
320 West 13th Street
New York, New York 10014
212 807 7171

Coordinating Architects

POLK STANLEY YEARY ARCHITECTS Ltd
700 South Schiller Street
Little Rock, Arkansas 72201
501 378 0878

WITSELL EVANS RASCO
901 West Third Street
Little Rock Arkansas 72201
501 374 5300

WOODS CARADINE ARCHITECTS
2200 South Main Street
Little Rock, Arkansas 72206
501 374 4060

Landscape Architects

HARGREAVES ASSOCIATES
118 Magazine Street
Cambridge, Massachusettes 02139
617 661 0070

LANDSCAPE ARCHITECTURE, Inc
2300 Cottondale Lane Suite 202
Little Rock, Arkansas 72202
501 374 5610

Structural Engineer

LESLIE E ROBERTSON ASSOC , RLLP
30 Broad Street, 47th Floor
New York, New York 10004
212 750 9000

MEP Engineers

FLACK + KURTZ Inc
475 Fifth Avenue
New York, New York 10017
212 532 9600

CROMWELL ARCHITECTS ENGINEERS
101 South Spring Street
Little Rock, Arkansas 72201
501 372 2900

Curtainwall Consultant

R A. HEINTGES ARCHITECTS
126 Fifth Avenue 9th Floor
New York, New York 10011
212.652 2966

Seal

WITSELL EVANS & RASCO, P.A. REGISTERED ARCHITECTS NO C-44 ARKANSAS

Issue	Date
100% Construction Documents	09/27/02
* Previously Issued as A442	

Job No 9908

Scale AS NOTED

Date September 27, 2002

Title ELEVATOR S4 PLANS, SECTIONS, ELEVATIONS

Sheet No A525.1

FOR OFFICIAL USE ONLY

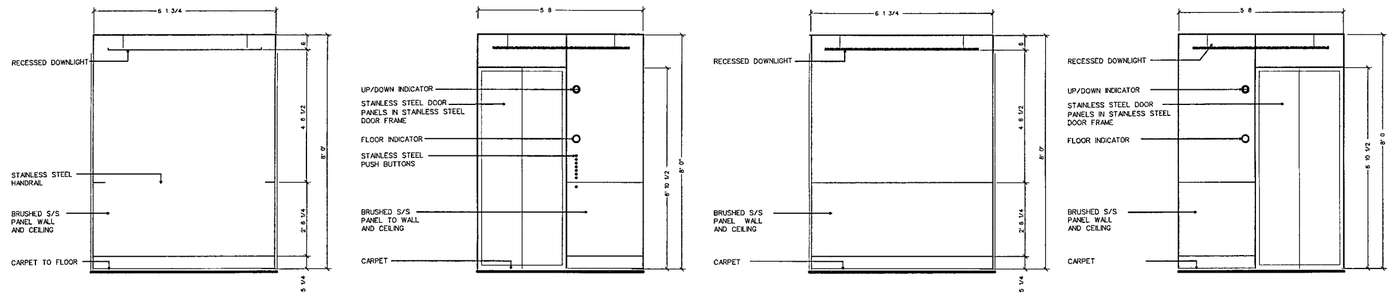

INTERIOR CAB ELEVATIONS (41)

SCALE 1/2 " =1'-0"

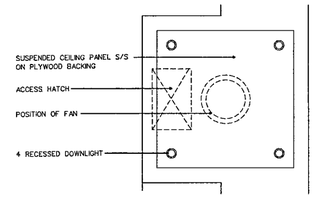

REFLECTED CAB CEILING PLAN (40)

SCALE 1/2 " =1'-0"

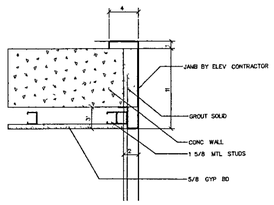

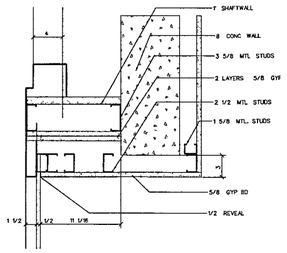

TYPICAL HOISTWAY JAMB DETAILS (31)

SCALE. 1 1/2 " =1'-0"

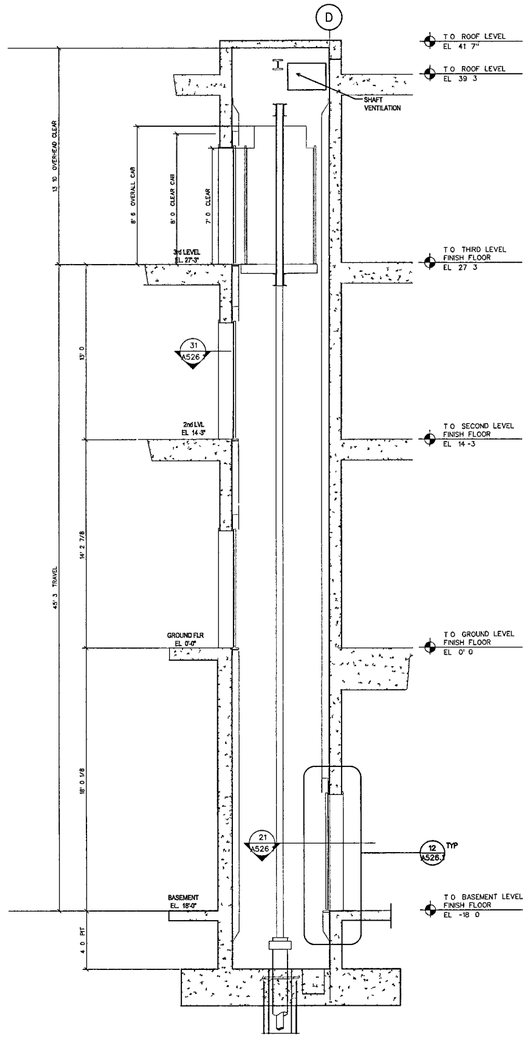

SECTION ELEVATION (11)

SCALE 1/4 " =1'-0"

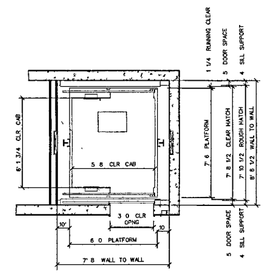

TYPICAL HOISTWAY PLAN - GROUND LEVEL (30)

SCALE. 1/4 " =1'-0"

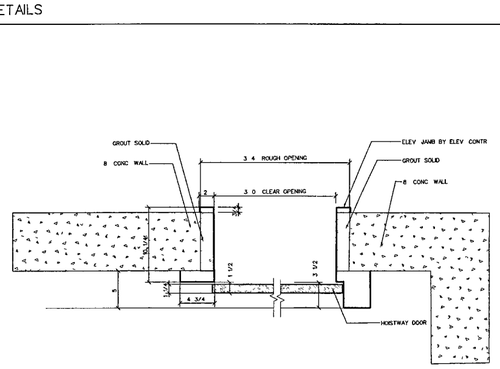

TYPICAL HOISTWAY JAMB DETAILS (21)

SCALE. 1 1/2 " =1 -0"

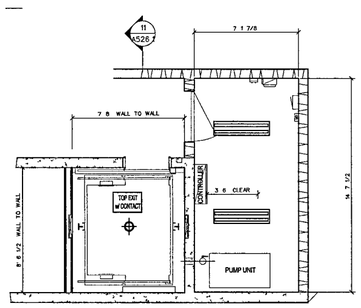

ELEVATOR PLAN - BASEMENT LEVEL (20)

SCALE 1/4 " =1'-0"

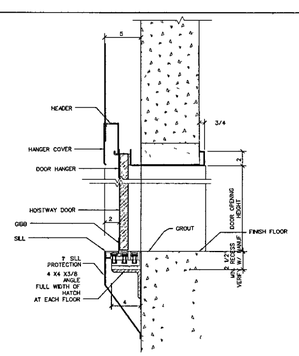

TYPICAL HOISTWAY HEAD & SILL DETAIL (12)

SCALE 1 1/2 " =1'-0"

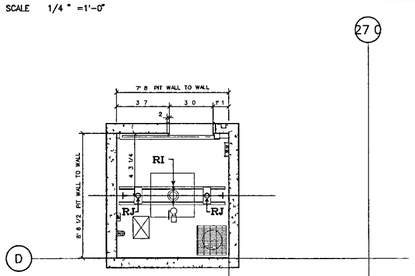

ELEVATOR PIT PLAN (10)

SCALE 1/4 " =1 -0"

WILLIAM J CLINTON PRESIDENTIAL CENTER

LITTLE ROCK, ARKANSAS

Architect

POLSHEK PARTNERSHIP LLP
320 West 13th Street
New York, New York 10014
212 807 7171

Coordinating Architects

POLK STANLEY YEARY ARCHITECTS Ltd
700 South Schiller Street
Little Rock, Arkansas 72201
501 378 0878

WITSELL EVANS RASCO
901 West Third Street
Little Rock, Arkansas 72201
501 374 5300

WOODS CARADINE ARCHITECTS
2200 South Main Street
Little Rock, Arkansas 72206
501 374 4060

Landscape Architects

HARGREAVES ASSOCIATES
118 Magazine Street
Cambridge, Massachusettes 02139
617 661 0070

LANDSCAPE ARCHITECTURE, Inc
2300 Cottondale Lane Suite 202
Little Rock, Arkansas 72202
501 374 5610

Structural Engineer

LESLIE E ROBERTSON ASSOC , RLLP
30 Broad Street, 47th Floor
New York, New York 10004
212 750 9000

MEP Engineers

FLACK + KURTZ Inc.
475 Fifth Avenue
New York, New York 10017
212 532 9600

CROMWELL ARCHITECTS ENGINEERS
101 South Spring Street
Little Rock, Arkansas 72201
501 372 2900

Curtainwall Consultant

R A. HEINTGES ARCHITECTS
126 Fifth Avenue, 9th Floor
New York, New York 10011
212 652-2966

Seal

WITSELL EVANS & RASCO P.A. REGISTERED ARCHITECTS 09-27-02 NO C-44 ARKANSAS

Issue	Date
100% Construction Documents	09/27/02
* Previously Issued as A442	

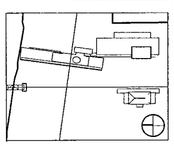

Job No 9908

Scale AS NOTED

Date September 27, 2002

Title ELEVATOR P6 PLANS, SECTIONS, ELEVATIONS

Sheet No A526.1

FOR OFFICIAL USE ONLY

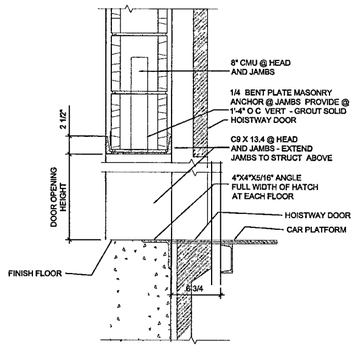

HOISTWAY DOOR HEAD & SILL DETAIL

SCALE 1 1/2" =1'-0"

12

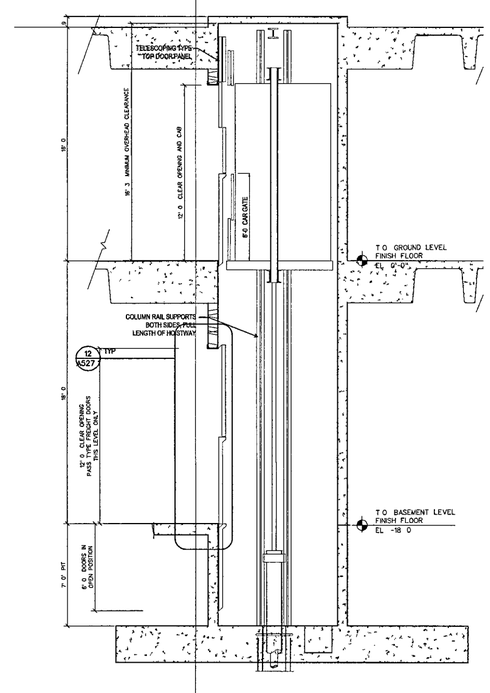

SECTION ELEVATION

SCALE 1/4" =1'-0"

11

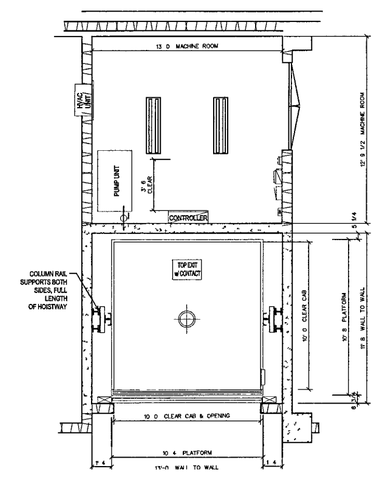

HOISTWAY PLAN @ BASEMENT

SCALE 1/4" =1'-0"

20

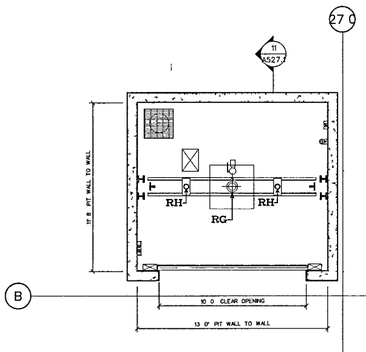

ELEVATOR PIT PLAN - BASEMENT LEVEL

SCALE 1/4" =1'-0"

10

WILLIAM J. CLINTON PRESIDENTIAL CENTER

LITTLE ROCK, ARKANSAS

Architect

POLSHEK PARTNERSHIP LLP
320 West 13th Street
New York, New York 10014
212 807 7171

Coordinating Architects

POLK STANLEY YEARY ARCHITECTS Ltd
700 South Schiller Street
Little Rock, Arkansas 72201
501 378 0878

WITSELL EVANS RASCO
901 West Third Street
Little Rock, Arkansas 72201
501 374 5300

WOODS CARADINE ARCHITECTS
2200 South Main Street
Little Rock, Arkansas 72206
501 374 4060

Landscape Architects

HARGREAVES ASSOCIATES
118 Magazine Street
Cambridge, Massachusettes 02139
617 661 0070

LANDSCAPE ARCHITECTURE, Inc
2300 Cottondale Lane Suite 202
Little Rock, Arkansas 72202
501 374 5610

Structural Engineer

LESLIE E ROBERTSON ASSOC , RLLP
30 Broad Street, 47th Floor
New York, New York 10004
212 750 9000

MEP Engineers

FLACK + KURTZ Inc.
475 Fifth Avenue
New York, New York 10017
212 532 9600

CROMWELL ARCHITECTS ENGINEERS
101 South Spring Street
Little Rock, Arkansas 72201
501 372 2900

Curtainwall Consultant

R. A. HEINTGES ARCHITECTS
126 Fifth Avenue, 9th Floor
New York, New York 10011
212 652-2966

Seal

WITSELL EVANS & RASCO P.A. REGISTERED ARCHITECTS 9-27-02 NO C-44 ARKANSAS

Issue	Date
100% Construction Documents	09/27/02
* Previously Issued as A442	

Job No 9908

Scale AS NOTED

Date September 27, 2002

Title ELEVATOR F5 PLANS, SECTIONS, ELEVATIONS

Sheet No A527.1

FOR OFFICIAL USE ONLY

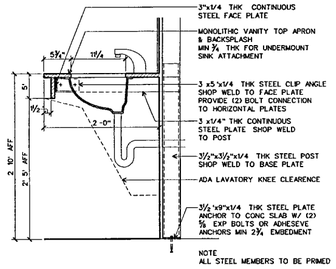

COUNTER MTD LAVATORY SECTION (56)
1" = 1'-0"

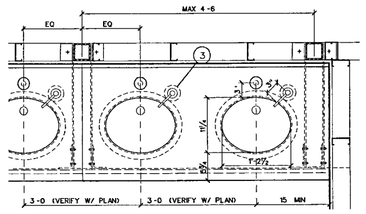

COUNTER MTD LAVATORY PLAN (55)
1" = 1'-0"

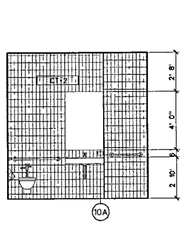

TOILET - GREEN ROOM NORTH ELEVATION (54)
SCALE 1/4 = 1-0' r-elev-bath

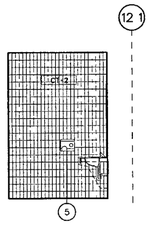

TOILET - GREEN ROOM WEST ELEVATION (53)
SCALE 1/4 = 1-0 r-elev-bath

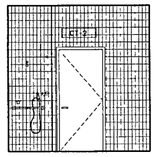

TOILET - GREEN ROOM SOUTH ELEVATION (52)
SCALE 1/4" = 1-0 r-elev-bath

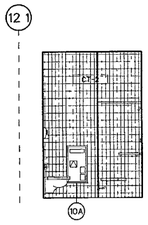

TOILET - GREEN ROOM EAST ELEVATION (51)
SCALE 1/4 = 1-0 r-elev-bath

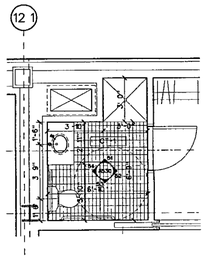

PLAN: GREEN ROOM TOILET (50)
SCALE 1/4 = 1-0' r-elev-bath

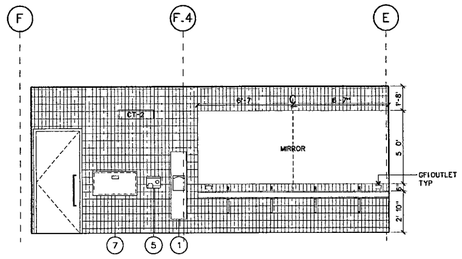

WOMEN'S TOILET - TYPICAL NORTH ELEVATION (44)
SCALE 1/4' = 1-0 r-elev-bath

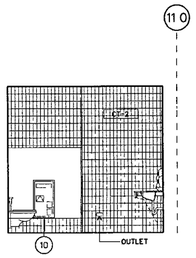

WOMEN'S TOILET - TYPICAL WEST ELEVATION (43)
SCALE 1/4" = 1-0 r-elev-bath

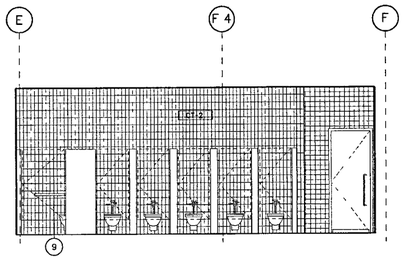

WOMEN'S TOILET - TYPICAL SOUTH ELEVATION (42)
SCALE 1/4' = 1'-0" r-elev-bath

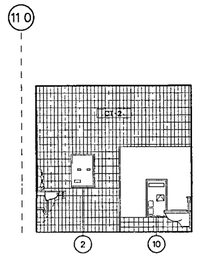

WOMEN'S TOILET - TYPICAL EAST ELEVATION (41)
SCALE 1/4 = 1-0" r-elev-bath

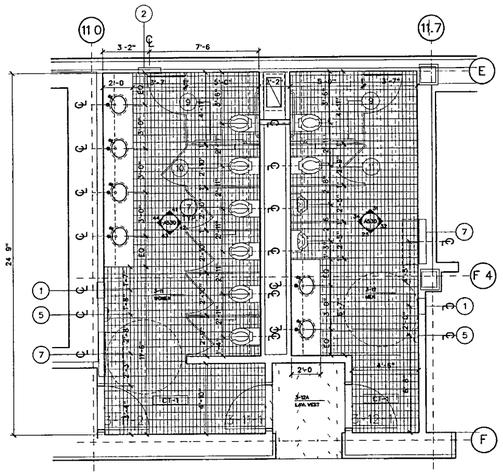

PLAN: LOWER AND UPPER MUSEUM LEVELS (30)
SCALE 1/4" = 1'-0" r-elev-bath

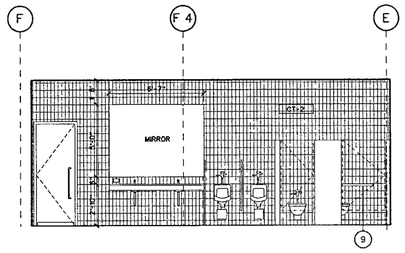

MENS TOILET - TYPICAL NORTH ELEVATION (34)
SCALE 1/4 = 1-0' r-elev-bath

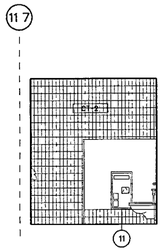

MENS TOILET - TYPICAL WEST ELEVATION (33)
SCALE 1/4 = 1-0' r-elev-bath

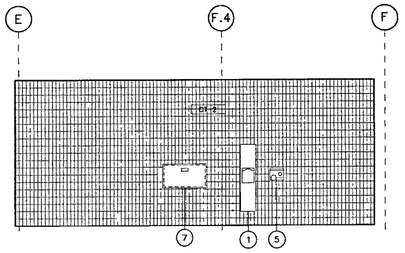

MENS TOILET - TYPICAL SOUTH ELEVATION (32)
SCALE 1/4 = 1-0 r-elev-bath

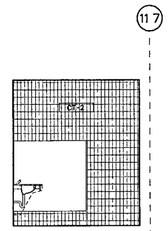

MENS TOILET - TYPICAL EAST ELEVATION (31)
SCALE 1/4 = 1-0' r-elev-bath

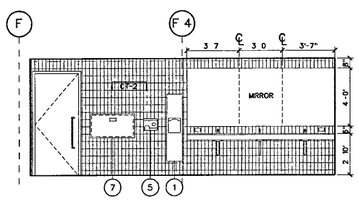

WOMEN'S TOILET - GROUND LEVEL NORTH ELEVATION (24)
SCALE 1/4 = 1-0 r-elev-bath

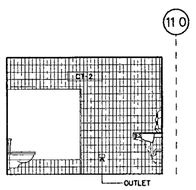

WOMEN'S TOILET - GROUND LEVEL WEST ELEVATION (23)
SCALE 1/4" = 1'-0 r-elev-bath

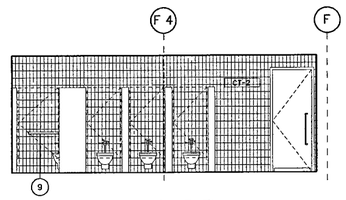

WOMEN'S TOILET - GROUND LEVEL SOUTH ELEVATION (22)
SCALE 1/4' = 1-0 r-elev-bath

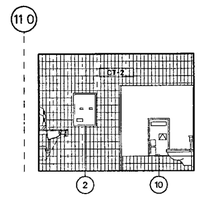

WOMEN'S TOILET - GROUND LEVEL EAST ELEVATION (21)
SCALE 1/4' = 1-0' r-elev-bath

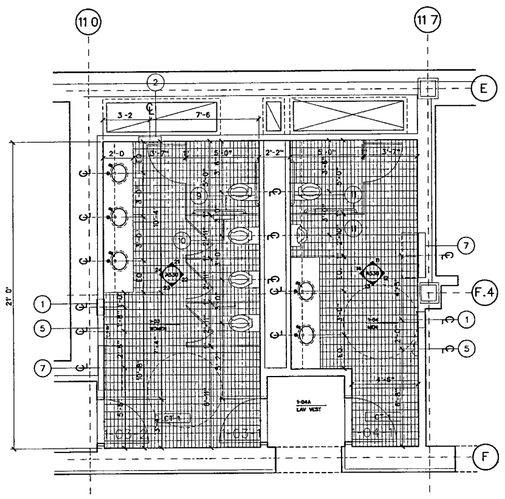

PLAN GROUND LEVEL (10)
SCALE 1/4 = 1-0' r-elev-bath

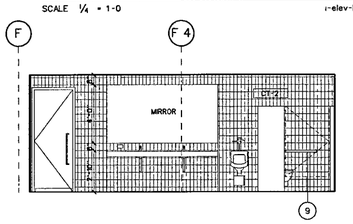

MENS TOILET - GROUND LEVEL NORTH ELEVATION (14)
SCALE 1/4' = 1-0" r-elev-bath

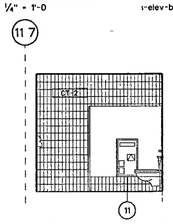

MENS TOILET - GROUND LEVEL WEST ELEVATION (13)
SCALE 1/4" = 1'-0" r-elev-bath

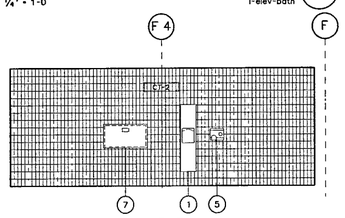

MENS TOILET - GROUND LEVEL SOUTH ELEVATION (12)
SCALE 1/4' = 1'-0 r-elev-bath

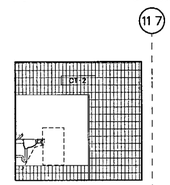

MENS TOILET - GROUND LEVEL EAST ELEVATION (11)
SCALE 1/4' = 1'-0" r-elev-bath

WILLIAM J CL
PRESIDEN
CENTE

LITTLE ROCK, ARK

Architect
POLSHEK PARTNERSHIP
320 West 13th Street
New York, New York 10014
212.807 7171

Coordinating Architects
POLK STANLEY YEARY AI
700 South Schiller Street
Little Rock, Arkansas 72201
501 378 0878

WITSELL EVANS RASCO
901 West Third Street
Little Rock Arkansas 72201
501 374.5300

WOODS CARADINE ARCH
2200 South Main Street
Little Rock Arkansas 72206
501 374 4060

Landscape Architects
HARGREAVES ASSOCIAT
118 Magazine Street
Cambridge Massachusette
617 661 0070

LANDSCAPE ARCHITECT
2300 Cottondale Lane Suite
Little Rock, Arkansas 7220
501 374 5610

Structural Engineer
LESLIE E. ROBERTSON A
30 Broad Street, 47th Floor
New York, New York 10004
212 750 9000

MEP Engineers
FLACK + KURTZ Inc.
475 Fifth Avenue
New York, New York 10017
212 532.9600

CROMWELL ARCHITECTS
101 South Spring Street
Little Rock Arkansas 7220
501 372 2900

Curtainwall Consultant
R. A. HEINTGES ARCHITE
125 Fifth Avenue 9th Floor
New York, New York 1001
212.652-2968

Seal

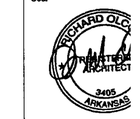

100% Construction Doc
90% Progress Printing
100% Struct/ CD Pro
100% Steel & Concret
& Architectural CD Pr
100% Design Develop
Issue
*Issued originally on A

Job No
Scale
Date
Title
MUSEUM E
RES
PL
ELE
Sheet No
A

FOR OFFICIAL USE

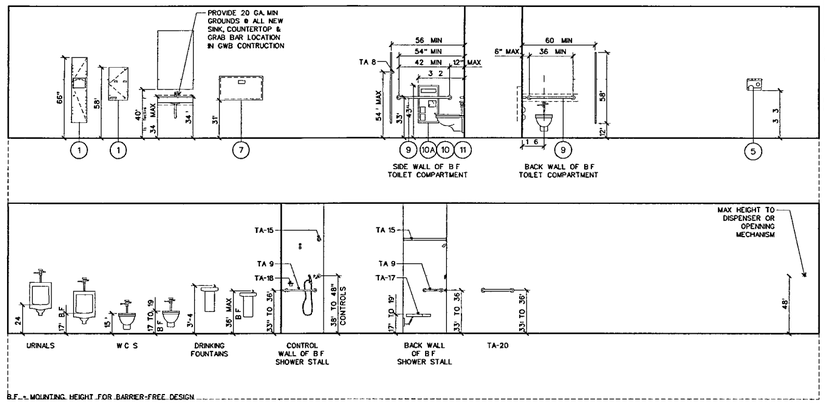

TYPICAL MOUNTING HEIGHTS DIAGRAM 40

1/4" = 1'-0"

ToiletAccSchedule.dgn

TYPICAL MOUNTING HEIGHTS (ACCESSORIES & FIXTURES)

COMMENTS:
1. TOILET ROOM ACCESSORIES SHOULD BE MOUNTED WITH THEIR DISPENSING MECHANISM COIN SLOTS & DISPENSING OPENINGS @
- 54 A.F.F. MAX FOR SIDE REACH
- 48 A.F.F. MAX FOR FRONT REACH

HEIGHTS PROVIDED MEET FRONT REACH REQUIREMENTS

TOILET ACCESSORY SCHEDULE

ITEM*	DESCRIPTION	MFR	MODEL*	FINISH	MOUNT	REMARKS
1	PAPER TOWEL DISPENSER & WASTE RECEPTACLE	BOBRICK	B-3803	SATIN FINISH STAINLESS STEEL	RECESSED	5½" MIN. RECESSED DEPTH
2	SANITARY NAPKIN & TAMPON VENDOR	BOBRICK	B-3500	SATIN FINISH STAINLESS STEEL	RECESSED	4" MIN RECESSED DEPTH
3	SOAP DISPENSER	BOBRICK	B-8221	STAINLESS STEEL	LAVATORY	-
4	MIRROR WITH FRAME AND SHELF	BOBRICK	B-166-2436	SATIN FINISH STAINLESS STEEL	SURFACE	SPECIFY SIZE
5	HAND DRYER	WORLD DRYER	DXA5	POLISHED ST STL COVER	SURFACE	SPECIFY SIZE
6	FACIAL TISSUE DISPENSER	BOBRICK	B-355	SATIN FINISH STAINLESS STEEL	RECESSED	4 MIN RECESSED DEPTH
7	BABY CHANGING STATION	BROCAR	100 SS-C	SS EXTERIOR & PLASTIC INTERIOR	RECESSED	3½" MIN RECESSED DEPTH
8	UTILITY HOOK	BOBRICK	B-682	SATIN FINISH TANLESS STEEL	SURFACE	-
9	GRAB BAR	BOBRICK	B-6806 99 36 & 42" LENGTH	PEENED GRIP	SURFACE	-
10	SEAT-COVER/TOILET TISSUE DISPENSER SANITARY NAPKIN DISPOSAL	BOBRICK	B-3571	SATIN FINISH STAINLESS STEEL	PARTITION	-
10A	SEAT-COVER/TOILET TISSUE DISPENSER SANITARY NAPKIN DISPOSAL	BOBRICK	B-3574	SATIN FINISH STAINLESS STEEL	RECESSED	4" MIN RECESSED DEPTH
11	SEAT-COVER/TOILET TISSUE DISPENSER	BOBRICK	B-3471	SATIN FINISH STAINLESS STEEL	PARTITION	-

TOILET ACCESSORIES SCHEDULE

COMMENTS:
1 COORDINATE PARTITION CHASE DEPTH WITH MOUNTING CLEARANCES NOTED IN REMARKS COLUMN DELETE REMARKS AFTER COORDINATING

2 RECOMMENDED WOMEN'S OR UNISEX TOILET ROOM ACCESSORIES
- 1 (OR 1A (NOTE A.)
- 2
- 3 (NOTE B)
- 4 OR 4A (NOTE C)
- 7 OR 7A (NOTE D)
- 9
- 10 OR 10A

3 RECOMMENDED MEN'S TOILET ROOM ACCESSORIES
- 1 OR 1A (NOTE A.)
- 3 (NOTE B)
- 4 OR 4A (NOTE C.)
- 7 OR 7A (NOTE D)
- 9
- 11 OR 11A

NOTES
A. VERIFY PAPER TYPE REQUIREMENTS
B. COORDINATE DISPENSER WITH SPECIFIED LAVATORY USE S & 18 IF LAVATORY/COUNTER TOP CAN NOT ACCOMMODATE DISPENSER 4
C. IF SHELF IS USED VERIFY CLEARANCES OF LAVATORY HARDWARE USE FULL WIDTH MIRROR AT COUNTER TOPS
D. USE AT PUBLIC TOILETS ONLY. SELECT MAKE BASED ON FINISH PREFERENCES

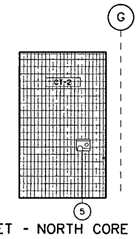

TOILET - NORTH CORE NORTH ELEVATION 35

SCALE 1/4" = 1-0 r-elev-bath

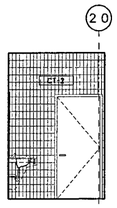

TOILET - NORTH CORE WEST ELEVATION 34

SCALE 1/4" = 1-0' r-elev-bath

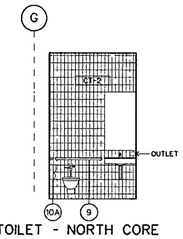

TOILET - NORTH CORE SOUTH ELEVATION 33

SCALE 1/4" = 1'-0" r-elev-bath

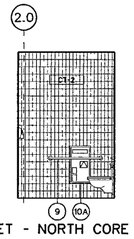

TOILET - NORTH CORE EAST ELEVATION 32

SCALE 1/4" = 1-0' r-elev-bath

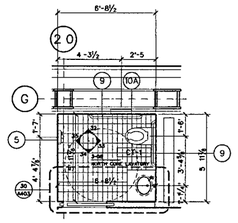

PLAN NORTH CORE 31

SCALE 1/4" = 1-0' r-elev-bath

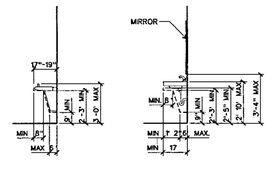

D.F. & LAVATORY CLEARENCES 30

1/4" = 1'-0"

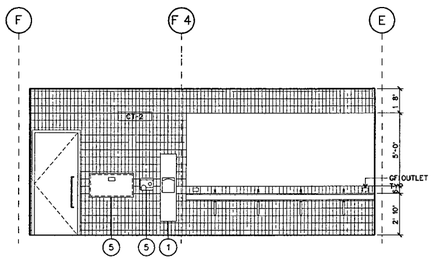

WOMEN'S TOILET - TYPICAL NORTH ELEVATION 24

SCALE 1/4" = 1-0 r-elev-bath

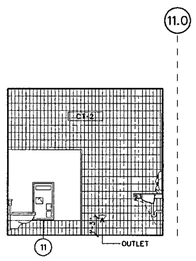

WOMEN'S TOILET - TYPICAL WEST ELEVATION 23

SCALE 1/4" = 1-0 r-elev-bath

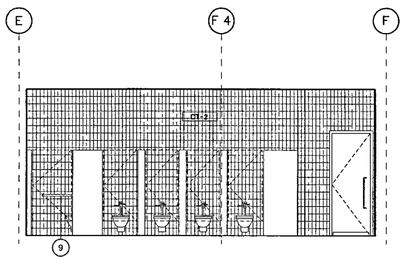

WOMEN'S TOILET - TYPICAL SOUTH ELEVATION 22

SCALE 1/4" = 1-0 r-elev-bath

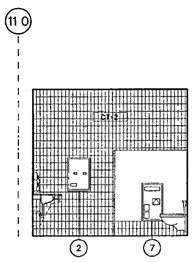

WOMEN'S TOILET - TYPICAL EAST ELEVATION 21

SCALE 1/4" = 1-0 r-elev-bath

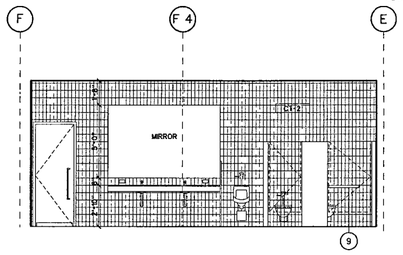

MENS TOILET - TYPICAL NORTH ELEVATION 14

SCALE 1/4" = 1-0 r-elev-bath

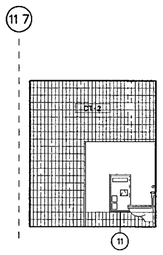

MENS TOILET - TYPICAL WEST ELEVATION 13

SCALE 1/4" = 1-0" r-elev-bath

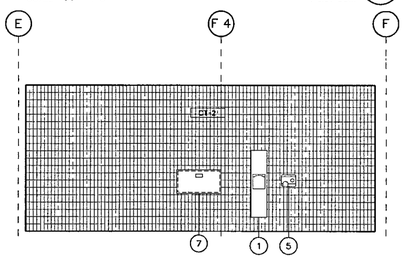

MENS TOILET - TYPICAL SOUTH ELEVATION 12

SCALE 1/4" = 1-0" r-elev-bath

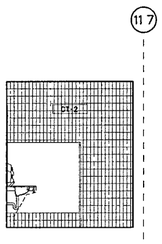

MENS TOILET - TYPICAL EAST ELEVATION 11

SCALE 1/4" = 1-0" r-elev-bath

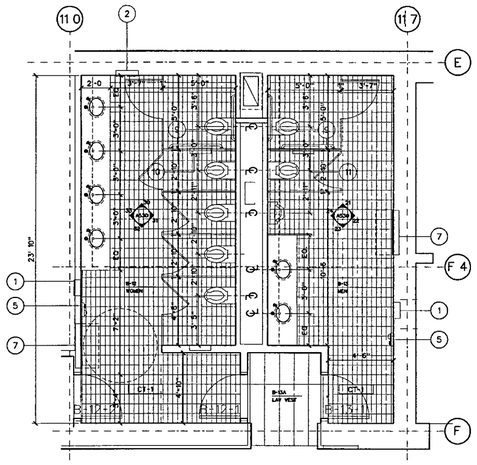

PLAN: BASEMENT LEVEL 10

SCALE 1/4" = 1-0" r-elev-bath

WILLIAM J CLINTON PRESIDENTIAL CENTER

LITTLE ROCK, ARKANSAS

Architect

POLSHEK PARTNERSHIP LLP
320 West 13th Street
New York New York 10014
212 807 7171

Coordinating Architects

POLK STANLEY YEARY ARCHITECTS Ltd
700 South Schiller Street
Little Rock, Arkansas 72201
501 378 0878

WITSELL EVANS RASCO
901 West Third Street
Little Rock Arkansas 72201
501 374 5300

WOODS CARADINE ARCHITECTS
2200 South Main Street
Little Rock, Arkansas 72206
501 374 4060

Landscape Architects

HARGREAVES ASSOCIATES
118 Magazine Street
Cambridge Massachusettes 02139
617 661 0070

LANDSCAPE ARCHITECTURE Inc.
2300 Cottondale Lane Suite 202
Little Rock, Arkansas 72202
501 374 5610

Structural Engineer

LESLIE E ROBERTSON ASSOC., RLLP
30 Broad Street, 47th Floor
New York, New York 10004
212 750 9000

MEP Engineers

FLACK + KURTZ Inc.
475 Fifth Avenue
New York, New York 10017
212 532 9600

CROMWELL ARCHITECTS ENGINEERS
101 South Spring Street
Little Rock, Arkansas 72201
501 372 2900

Curtainwall Consultant

R. A. HEINTGES ARCHITECTS
128 Fifth Avenue, 9th Floor
New York, New York 10011
212 652-2968

Seal

Issue	Date
100% Construction Documents	09/27/02
90% Progress Printing	08/30/02
100% Struct./ CD Progress	07/01/02
100% Steel & Concrete CD & Architectural CD Progress	05/15/02
100% Design Development*	03/01/02

*Issued originally as A528

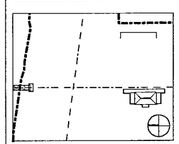

Job No 9908

Scale 1/4"=1'-0"

Date September 27, 2002

Title MUSEUM BUILDING RESTROOMS PLANS, ELEVATIONS, & SCHEDULE

Sheet No A531

FOR OFFICIAL USE ONLY

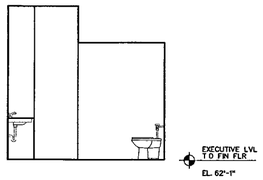

NORTH ELEV. 5-11 BATHROOM (43)
SCALE 1/4 - 1 b-inel21 dgn

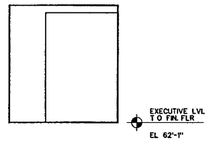

WEST ELEV. 5-11 BATHROOM (42)
SCALE 1/4' - 1' b-inel21 dgn

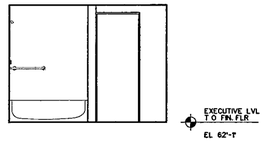

SOUTH ELEV 5-11 BATHROOM (41)
SCALE 1/4 - 1 b-inel21 dgn

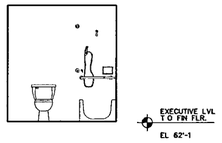

EAST ELEV. 5-11 BATHROOM (40)
SCALE 1/4' - 1 b-inel21 dgn

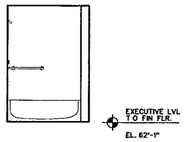

NORTH ELEV. 5-09 BATHROOM (33)
SCALE 1/4' - 1 b-inel24 dgn

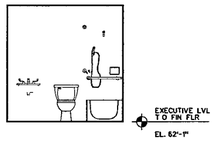

WEST ELEV. 5-09 BATHROOM (32)
SCALE 1/4 - 1 b-inel24 dgn

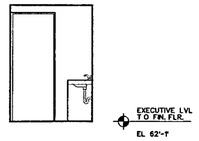

SOUTH ELEV. 5-09 BATHROOM (31)
SCALE 1/4 - 1 b-inel24 dgn

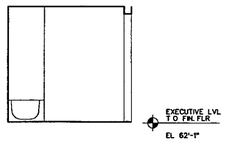

EAST ELEV. 5-09 BATHROOM (30)
SCALE 1/4" - 1 b-inel24 dgn

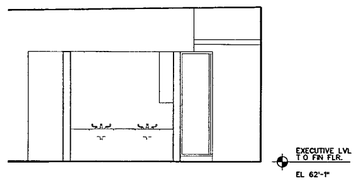

WEST ELEV. BEDROOM 1 (22)
SCALE 1/4" - 1 b-inel26 dgn

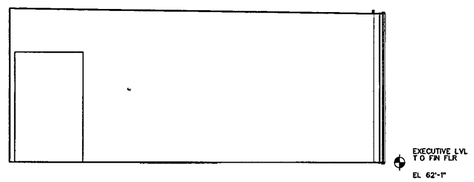

EAST ELEV. (1) BEDROOM 1 (21)
SCALE 1/4' - 1 b-inel-28 dgn

EAST ELEVATION (2) BEDROOM 2 (20)
SCALE 1/4"- 1'- b-inel-28 dgn

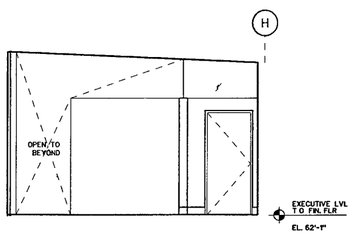

XXXXXXXXXX
XXXXXXXXXX
SCALE XX ' = XX'-XX" REF FILE NAME (11)

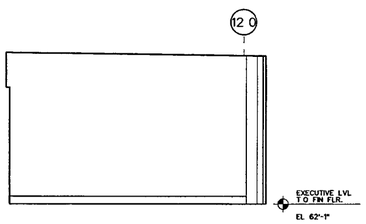

XXXXXXXXXX
XXXXXXXXXX
SCALE XX ' = XX -XX" REF FILE NAME (10)

WILLIAM J CLINTON PRESIDENTIAL CENTER

LITTLE ROCK, ARKANSAS

Architect

POLSHEK PARTNERSHIP LLP
320 West 13th Street
New York New York 10014
212 807 7171

Coordinating Architects

POLK STANLEY YEARY ARCHITECTS Ltd
700 South Schiller Street
Little Rock Arkansas 72201
501 378 0878

WITSELL EVANS RASCO
901 West Third Street
Little Rock, Arkansas 72201
501 374 5300

WOODS CARADINE ARCHITECTS
2200 South Main Street
Little Rock, Arkansas 72206
501 374 4060

Landscape Architects

HARGREAVES ASSOCIATES
116 Magazine Street
Cambridge Massachusettes 02139
617 661 0070

LANDSCAPE ARCHITECTURE, Inc
2300 Cottondale Lane Suite 202
Little Rock Arkansas 72202
501 374 5610

Structural Engineer

LESLIE E. ROBERTSON ASSOC RLLP
30 Broad Street, 47th Floor
New York, New York 10004
212 750 9000

MEP Engineers

FLACK + KURTZ Inc.
475 Fifth Avenue
New York, New York 10017
212 532 9600

CROMWELL ARCHITECTS ENGINEERS
101 South Spring Street
Little Rock, Arkansas 72201
501 372 2900

Curtainwall Consultant

R. A. HEINTGES ARCHITECTS
126 Fifth Avenue, 9th Floor
New York, New York 10011
212 652-2966

Seal

Issue	Date
100% Construction Documents	09/27/02

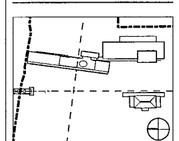

Job No 9908

Scale 1/4"=1'-0"

Date September 27, 2002

Title MUSEUM BUILDING RESTROOMS PLANS AND ELEVATIONS

Sheet No A532

FOR OFFICIAL USE ONLY

LEGEND

GB – GRAB BAR
PT – PAPER TOWEL DISPENSER
TP – TOILET PAPER DISPENSER
SD – SOAP DISPENSER
HD – ELEC HAND PAPER

TYPICAL MOUNTING HEIGHTS

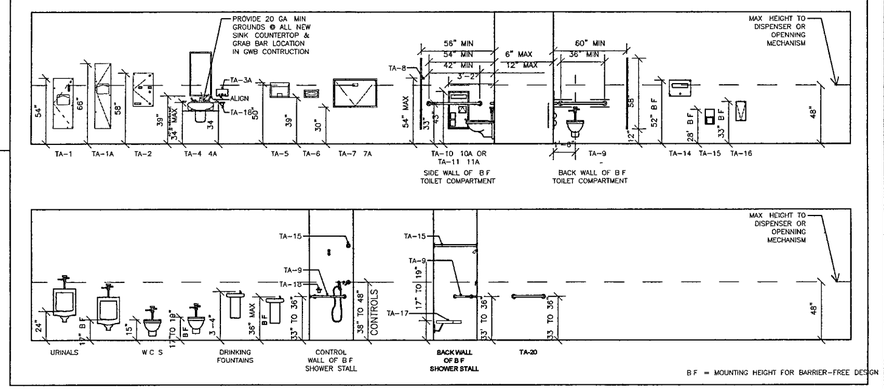

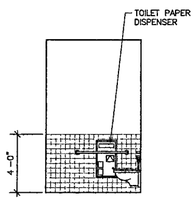

B-36 MENS TOILET – BASEMENT LEVEL NORTH ELEVATION (53)
SCALE 1/4" = 1'-0"

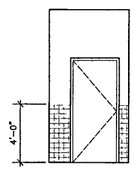

B-36 MENS TOILET – BASEMENT LEVEL WEST ELEVATION (52)
SCALE 1/4" = 1'-0"

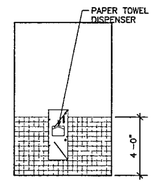

B-36 MENS TOILET – BASEMENT LEVEL SOUTH ELEVATION (51)
SCALE 1/4" = 1'-0"

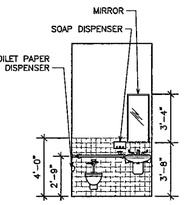

B-36 MENS TOILET – BASEMENT LEVEL EAST ELEVATION (50)
SCALE 1/4" = 1'-0"

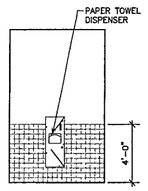

B-36 WOMENS TOILET – BASEMENT LEVEL NORTH ELEVATION (44)
SCALE 1/4" = 1'-0"

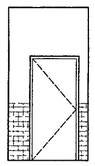

B-36 WOMENS TOILET – BASEMENT LEVEL WEST ELEVATION (43)
SCALE 1/4" = 1'-0"

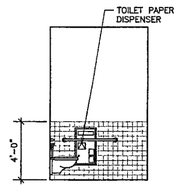

B-36WOMENS TOILET – BASEMENT LEVEL SOUTH ELEVATION (42)
SCALE 1/4" = 1'-0"

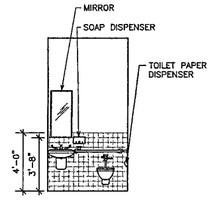

B-36 WOMENS TOILET – BASEMENT LEVEL EAST ELEVATION (41)
SCALE 1/4" = 1'-0"

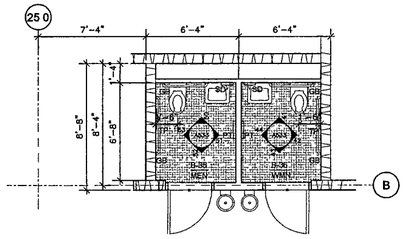

B-35/B-36 ARCHIVE BASEMENT ENLARGED TOILET PLAN (40)
SCALE 1/4" = 1'-0"

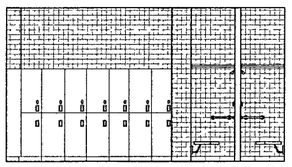

B-28 WOMENS TOILET – BASEMENT LEVEL NORTH ELEVATION (35)
SCALE 1/4" = 1'-0"

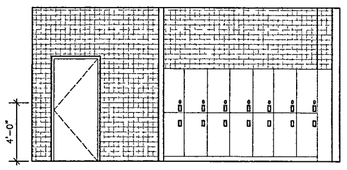

B-28 WOMENS TOILET – BASEMENT LEVEL WEST ELEVATION (34)
SCALE 1/4" = 1'-0"

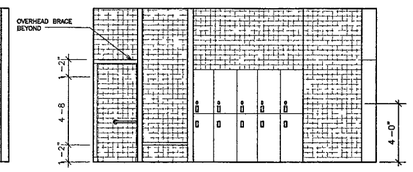

B-29 WOMENS TOILET – BASEMENT LEVEL SOUTH ELEVATION (33)
SCALE 1/4" = 1'-0"

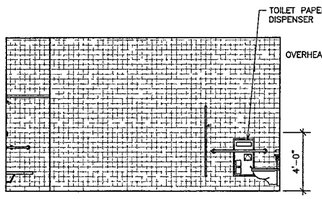

B-28 WOMENS TOILET – BASEMENT LEVEL EAST ELEVATION (32)
SCALE 1/4" = 1'-0"

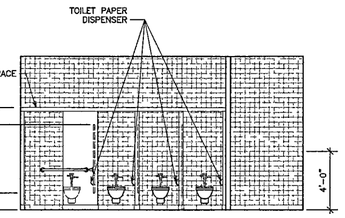

B-29 WOMENS TOILET – BASEMENT LEVEL SOUTH ELEVATION (31)
SCALE 1/4" = 1'-0"

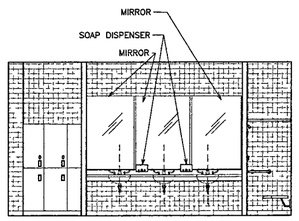

B-28 WOMENS TOILET – BASEMENT LEVEL NORTH ELEVATION (30)
SCALE 1/4" = 1'-0"

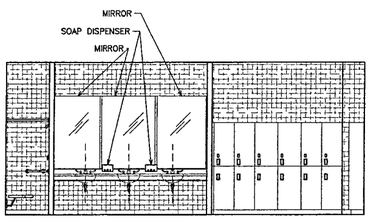

B-29 MENS TOILET – BASEMENT LEVEL SOUTH ELEVATION (22)
SCALE 1/4" = 1'-0"

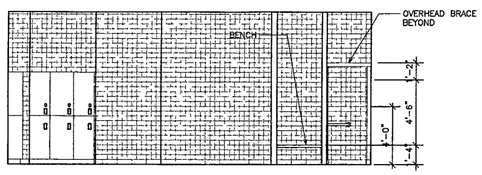

B-29 MENS TOILET – BASEMENT LEVEL NORTH ELEVATION (21)
SCALE 1/4" = 1'-0"

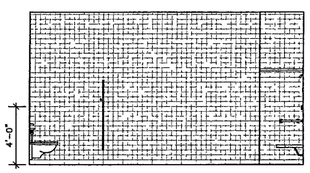

B-29 MENS TOILET – BASEMENT LEVEL EAST ELEVATION (20)
SCALE 1/4" = 1'-0"

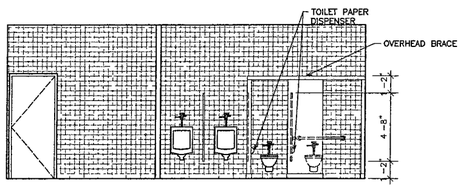

B-29 MENS TOILET – BASEMENT LEVEL NORTH ELEVATION (13)
SCALE 1/4" = 1'-0"

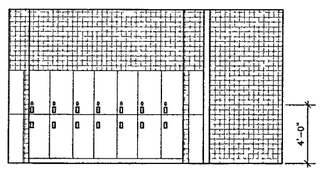

B-29 MENS TOILET – BASEMENT LEVEL WEST ELEVATION (12)
SCALE 1/4" = 1'-0"

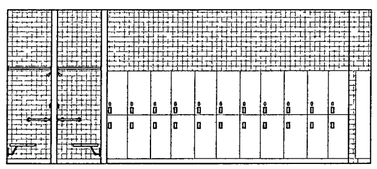

B-29 MENS TOILET – BASEMENT LEVEL SOUTH ELEVATION (11)
SCALE 1/4" = 1'-0"

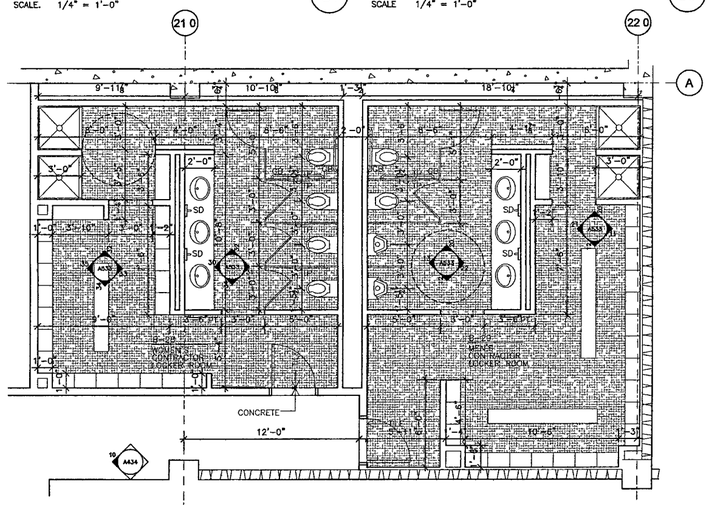

B-28/B-29 ARCHIVE BASEMENT ENLARGED TOILET PLAN (10)
SCALE 1/4" = 1'-0"

WILLIAM J. CLINTON PRESIDENTIAL CENTER

LITTLE ROCK, ARKANSAS

Architect
POLSHEK PARTNERSHIP LLP
320 West 13th Street
New York, New York 10014
212 807 7171

Coordinating Architects
POLK STANLEY YEARY ARCHITECTS Ltd
700 South Schiller Street
Little Rock, Arkansas 72201
501 378 0878

WITSELL EVANS RASCO
901 West Third Street
Little Rock, Arkansas 72201
501 374 5300

WOODS CARADINE ARCHITECTS
2200 South Main Street
Little Rock, Arkansas 72206
501.374 4060

Landscape Architects
HARGREAVES ASSOCIATES
118 Magazine Street
Cambridge Massachusettes 02139
617 661 0070

LANDSCAPE ARCHITECTURE, Inc
2300 Cottondale Lane Suite 202
Little Rock, Arkansas 72202
501 374 5610

Structural Engineer
LESLIE E ROBERTSON ASSOC , RLLP
30 Broad Street, 47th Floor
New York, New York 10004
212.750 9000

MEP Engineers
FLACK + KURTZ Inc
475 Fifth Avenue
New York, New York 10017
212.532.9600

CROMWELL ARCHITECTS ENGINEERS
101 South Spring Street
Little Rock, Arkansas 72201
501 372.2900

Curtainwall Consultant
R. A. HEINTGES ARCHITECTS
126 Fifth Avenue, 9th Floor
New York, New York 10011
212.652-2966

Seal

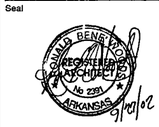

Issue	Date
100% Construction Documents	09/27/02
90% Progress Printing	08/30/02
100% Struct./ CD Progress	07/01/02

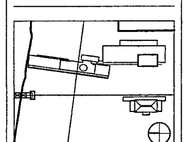

Job No 9908

Scale

Date SEPTEMBER 27 2002

Title RESTROOMS - PLANS ELEVATIONS & SCHEDULES

Sheet No. A533

FOR OFFICIAL USE ONLY

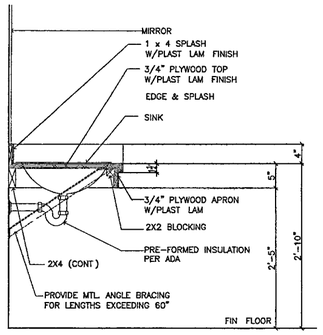

SECTION @ VANITY — 65
SCALE. 3/4" = 1'-0"

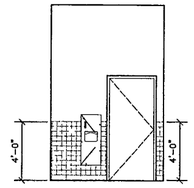

MENS TOILET – GROUND LEVEL NORTH ELEVATION — 64
SCALE 1/4" = 1'-0"

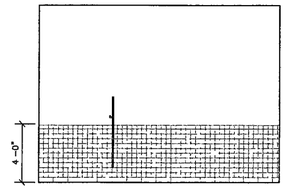

MENS TOILET – GROUND LEVEL EAST ELEVATION — 63
SCALE. 1/4" = 1'-0"

MENS TOILET – GROUND LEVEL SOUTH ELEVATION — 62
SCALE 1/4" = 1'-0"

MENS TOILET – GROUND LEVEL WEST ELEVATION — 61
SCALE 1/4" = 1'-0"

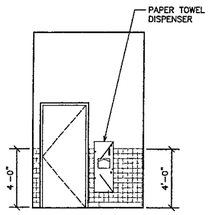

WOMENS TOILET – GROUND LEVEL NORTH ELEVATION — 52
SCALE. 1/4" = 1'-0"

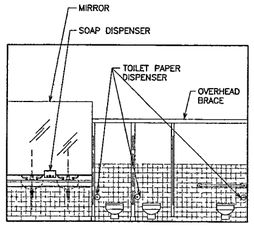

WOMENS TOILET – GROUND LEVEL WEST ELEVATION — 51
SCALE 1/4" = 1'-0"

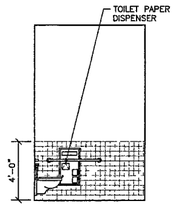

WOMENS TOILET – GROUND LEVEL SOUTH ELEVATION — 42
SCALE 1/4" = 1'-0"

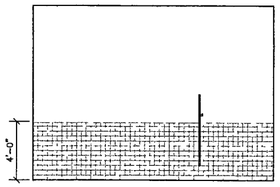

WOMENS TOILET – GROUND LEVEL EAST ELEVATION — 41
SCALE 1/4" = 1'-0"

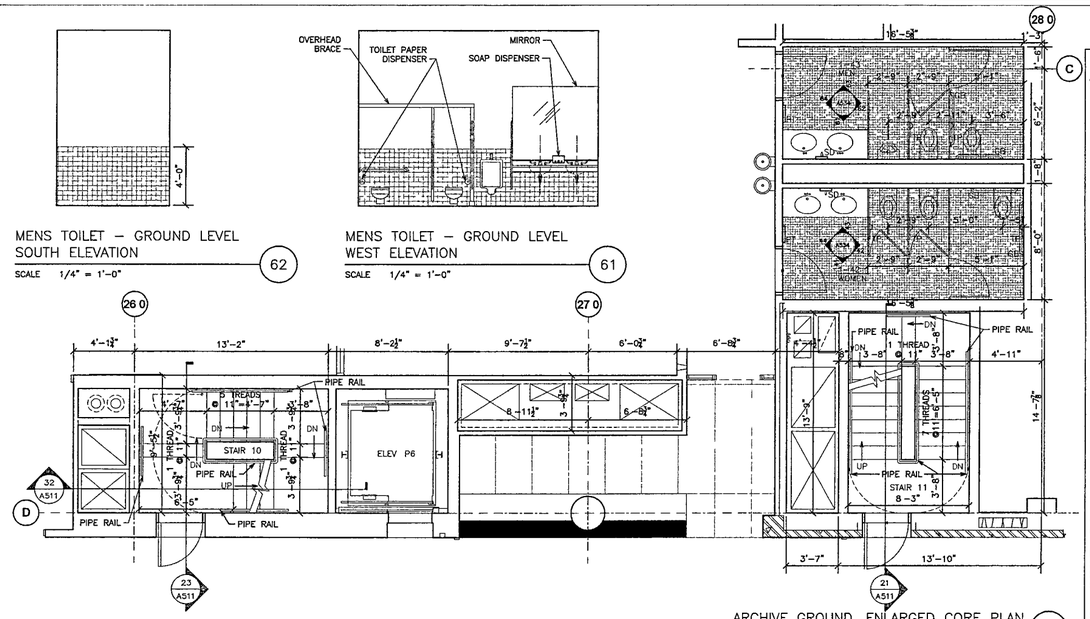

ARCHIVE GROUND ENLARGED CORE PLAN — 40
SCALE 1/4" = 1'-0" PLANS/TOILET

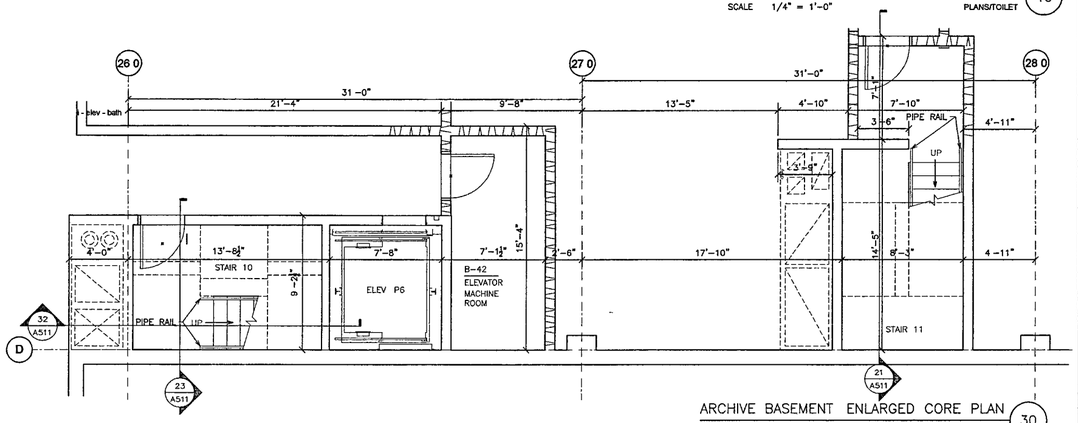

ARCHIVE BASEMENT ENLARGED CORE PLAN — 30
SCALE. 1/4" = 1'-0" PLANS/ TOILET

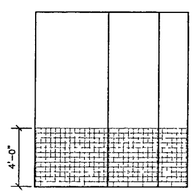

1-19 MENS TOILET – GROUND LEVEL NORTH ELEVATION — 23
SCALE 1/4" = 1'-0"

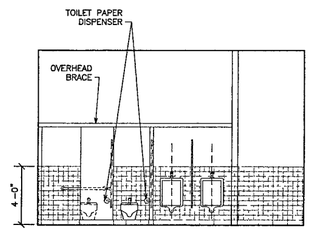

1-19 MENS TOILET – GROUND LEVEL WEST ELEVATION — 22
SCALE 1/4" = 1'-0"

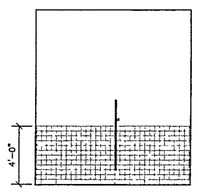

1-19 MENS TOILET – GROUND LEVEL SOUTH ELEVATION — 21
SCALE 1/4" = 1'-0"

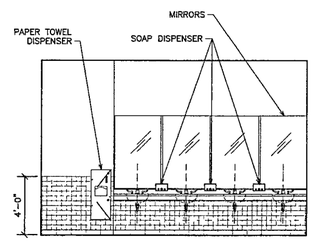

1-19 MENS TOILET – GROUND LEVEL EAST ELEVATION — 20
SCALE 1/4" = 1'-0"

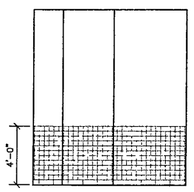

1-18 WOMENS TOILET – GROUND LEVEL NORTH ELEVATION — 14
SCALE 1/4" = 1'-0"

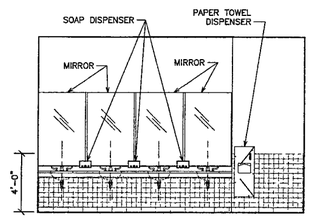

1-18 WOMENS TOILET – GROUND LEVEL WEST ELEVATION — 13
SCALE 1/4" = 1'-0"

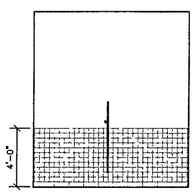

1-18 WOMENS TOILET – GROUND LEVEL SOUTH ELEVATION — 12
SCALE. 1/4" = 1'-0"

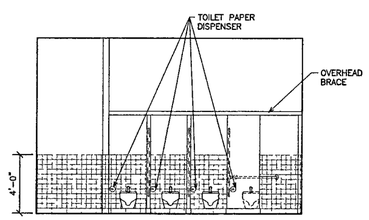

1-18 WOMENS TOILET – GROUND LEVEL EAST ELEVATION — 11
SCALE 1/4" = 1'-0"

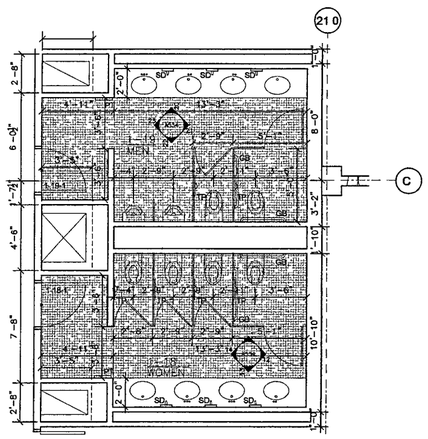

ARCHIVE GROUND ENLARGED TOILET PLAN — 10
SCALE 1/4" = 1'-0"

WILLIAM J. CLINTON PRESIDENTIAL CENTER

LITTLE ROCK, ARKANSAS

Architect
POLSHEK PARTNERSHIP LLP
320 West 13th Street
New York, New York 10014
212 807 7171

Coordinating Architects
POLK STANLEY YEARY ARCHITECTS Ltd
700 South Schiller Street
Little Rock, Arkansas 72201
501 378 0878

WITSELL EVANS RASCO
901 West Third Street
Little Rock, Arkansas 72201
501.374 5300

WOODS CARADINE ARCHITECTS
2200 South Main Street
Little Rock, Arkansas 72206
501 374 4060

Landscape Architects
HARGREAVES ASSOCIATES
118 Magazine Street
Cambridge, Massachusetts 02139
617 661 0070

LANDSCAPE ARCHITECTURE, Inc.
2300 Cottondale Lane Suite 202
Little Rock, Arkansas 72202
501 374.5610

Structural Engineer
LESLIE E ROBERTSON ASSOC , RLLP
30 Broad Street, 47th Floor
New York, New York 10004
212 750 9000

MEP Engineers
FLACK + KURTZ Inc.
475 Fifth Avenue
New York, New York 10017
212.532 9600

CROMWELL ARCHITECTS ENGINEERS
101 South Spring Street
Little Rock, Arkansas 72201
501 372.2900

Curtainwall Consultant
R. A. HEINTGES ARCHITECTS
126 Fifth Avenue, 9th Floor
New York, New York 10011
212 652-2966

Seal

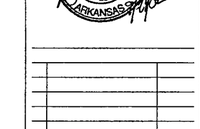

Issue	Date
100% Construction Documents	09/27/02
90% Progress Printing	08/30/02

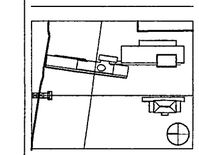

Job No 9908

Scale

Date SEPTEMBER 27, 2002

Title CORE - PLANS ELEVATIONS & SCHEDULES

Sheet No A534

FOR OFFICIAL USE ONLY

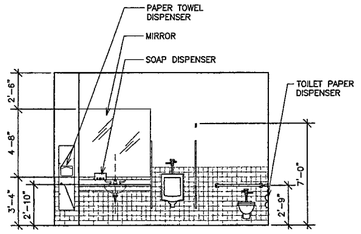

3-30 MENS TOILET – SECOND LEVEL NORTH ELEVATION (44)
SCALE 1/4" = 1'-0"

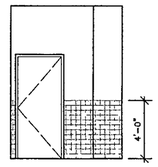

3-30 MENS TOILET – SECOND LEVEL WEST ELEVATION (43)
SCALE 1/4" = 1'-0"

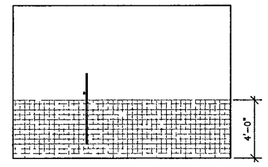

3-30 MENS TOILET – SECOND LEVEL SOUTH ELEVATION (42)
SCALE 1/4" = 1'-0"

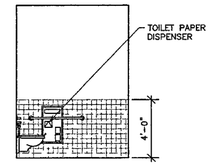

3-30 MENS TOILET – SECOND LEVEL EAST ELEVATION (41)
SCALE 1/4" = 1'-0"

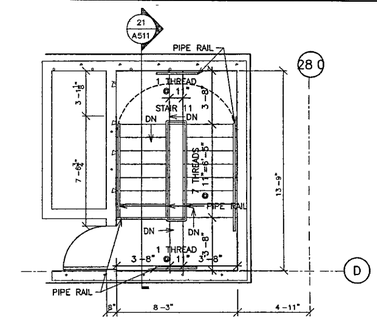

STAIR 11 ROOF LEVEL PLAN (40)
SCALE 1/4" = 1'-0"

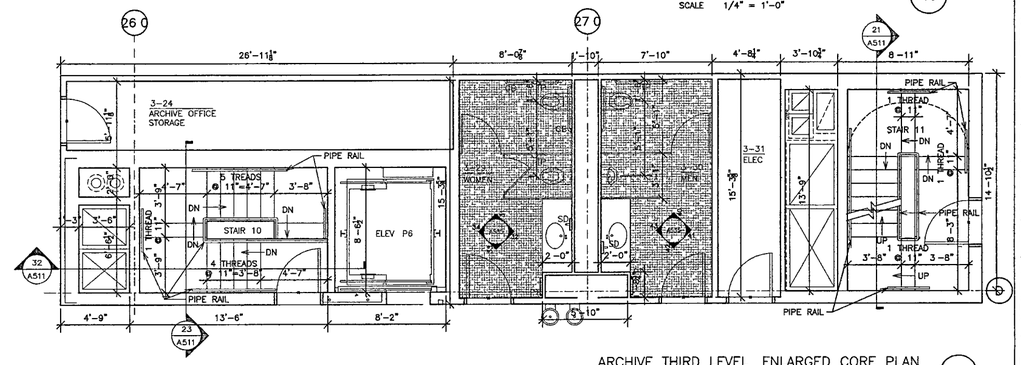

ARCHIVE THIRD LEVEL ENLARGED CORE PLAN (30)
SCALE 1/4" = 1'-0"

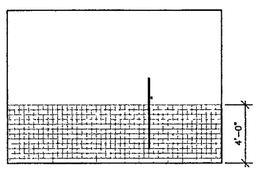

3-29 WOMENS TOILET – SECOND LEVEL NORTH ELEVATION (34)
SCALE 1/4" = 1'-0"

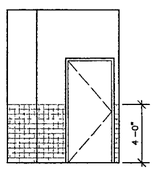

3-29 WOMENS TOILET – SECOND LEVEL WEST ELEVATION (33)
SCALE 1/4" = 1'-0"

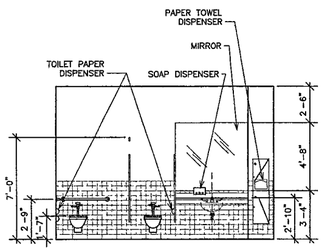

3-29 WOMENS TOILET – SECOND LEVEL SOUTH ELEVATION (32)
SCALE 1/4" = 1'-0"

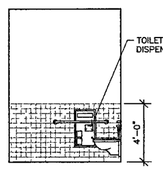

3-29 WOMENS TOILET – SECOND LEVEL EAST ELEVATION (31)
SCALE 1/4" = 1'-0"

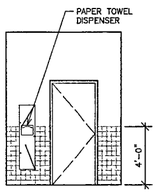

2-24 MENS TOILET – SECOND LEVEL NORTH ELEVATION (24)
SCALE 1/4" = 1'-0"

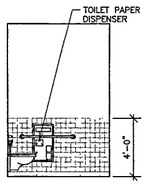

2-24 MENS TOILET – SECOND LEVEL WEST ELEVATION (23)
SCALE 1/4" = 1'-0"

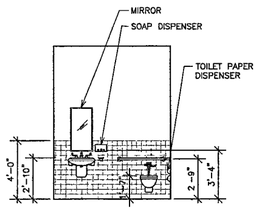

2-24 MENS TOILET – SECOND LEVEL SOUTH ELEVATION (22)
SCALE 1/4" = 1'-0"

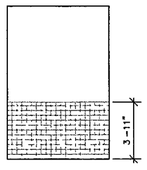

2-24 MENS TOILET – SECOND LEVEL EAST ELEVATION (21)
SCALE 1/4" = 1'-0"

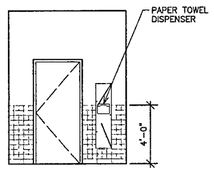

2-27 WOMENS TOILET – SECOND LEVEL NORTH ELEVATION (20)
SCALE 1/4" = 1'-0"

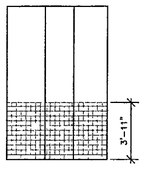

2-27 WOMENS TOILET – SECOND LEVEL WEST ELEVATION (13)
SCALE 1/4" = 1'-0"

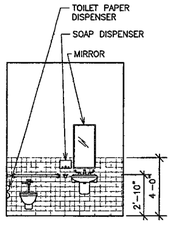

2-27 WOMENS TOILET – SECOND LEVEL SOUTH ELEVATION (12)
SCALE 1/4" = 1'-0"

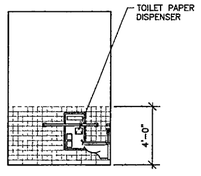

2-27 WOMENS TOILET – SECOND LEVEL EAST ELEVATION (11)
SCALE 1/4" = 1'-0"

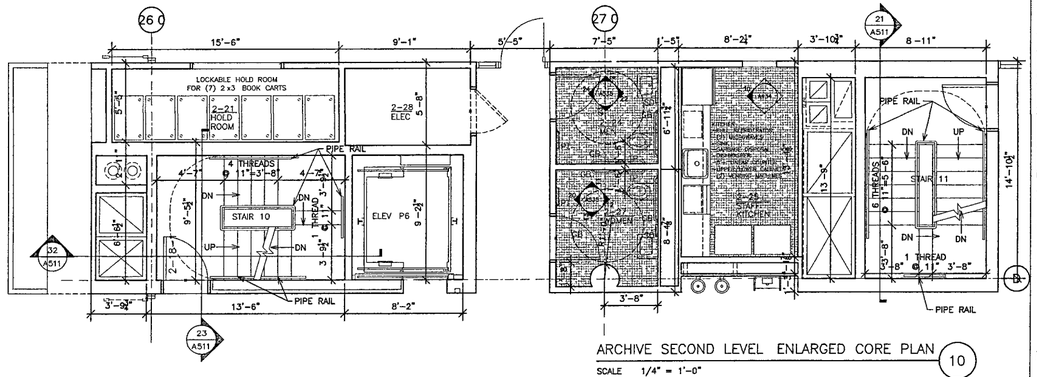

ARCHIVE SECOND LEVEL ENLARGED CORE PLAN (10)
SCALE 1/4" = 1'-0"

WILLIAM J. CLINTON PRESIDENTIAL CENTER

LITTLE ROCK, ARKANSAS

Architect
POLSHEK PARTNERSHIP LLP
320 West 13th Street
New York, New York 10014
212 807 7171

Coordinating Architects
POLK STANLEY YEARY ARCHITECTS Ltd
700 South Schiller Street
Little Rock, Arkansas 72201
501 378.0878

WITSELL EVANS RASCO
901 West Third Street
Little Rock, Arkansas 72201
501 374 5300

WOODS CARADINE ARCHITECTS
2200 South Main Street
Little Rock, Arkansas 72206
501 374 4060

Landscape Architects
HARGREAVES ASSOCIATES
118 Magazine Street
Cambridge, Massachusettes 02139
617 661 0070

LANDSCAPE ARCHITECTURE, Inc.
2300 Cottondale Lane Suite 202
Little Rock, Arkansas 72202
501 374 5610

Structural Engineer
LESLIE E ROBERTSON ASSOC , RLLP
30 Broad Street, 47th Floor
New York, New York 10004
212 750 9000

MEP Engineers
FLACK + KURTZ Inc.
475 Fifth Avenue
New York, New York 10017
212.532 9600

CROMWELL ARCHITECTS ENGINEERS
101 South Spring Street
Little Rock, Arkansas 72201
501 372 2900

Curtainwall Consultant
R. A. HEINTGES ARCHITECTS
126 Fifth Avenue, 9th Floor
New York, New York 10011
212 652-2966

Seal

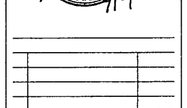

Issue	Date
100% Construction Documents	09/27/02
90% Progress Printing	08/30/02

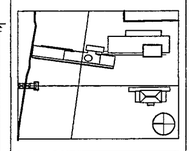

Job No 9908

Scale SEPTEMBER 27, 2002

Date

Title CORE - PLANS ELEVATIONS & SCHEDULES

Sheet No A535

FOR OFFICIAL USE ONLY

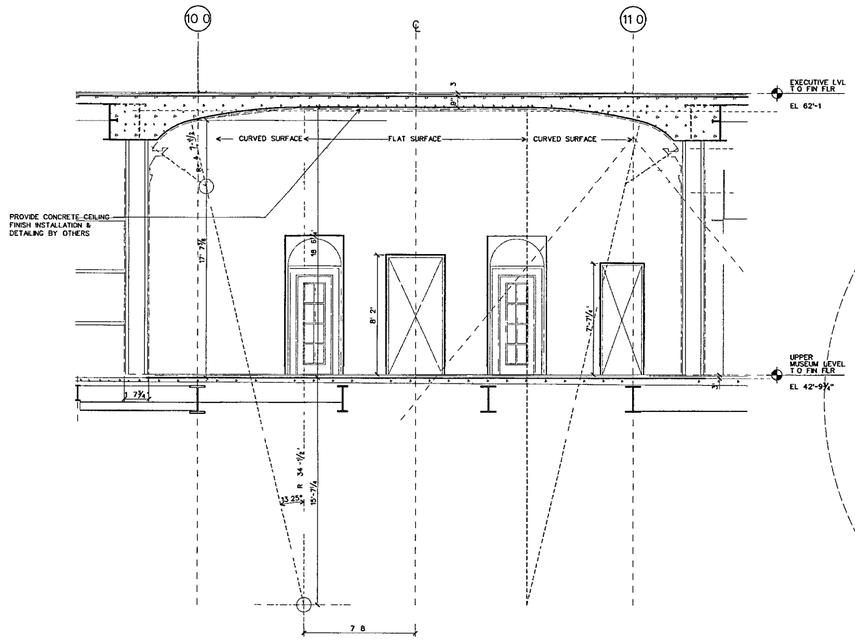

NORTH-SECTION AT OVAL OFFICE (21)

SCALE ¼ = 1'-0" OVAL DGN

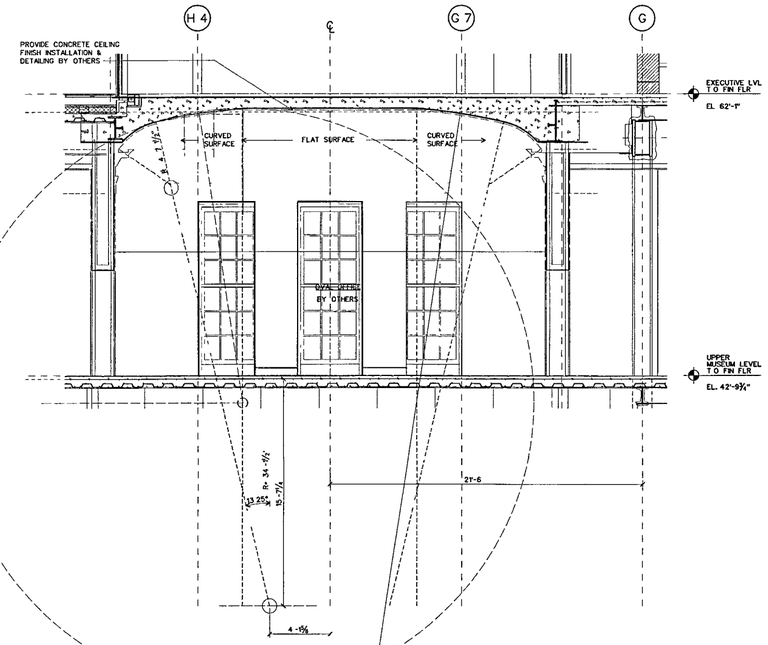

EAST-WEST SECTION AT OVAL OFFICE (20)

SCALE ¼" = 1'-0 OVAL DGN

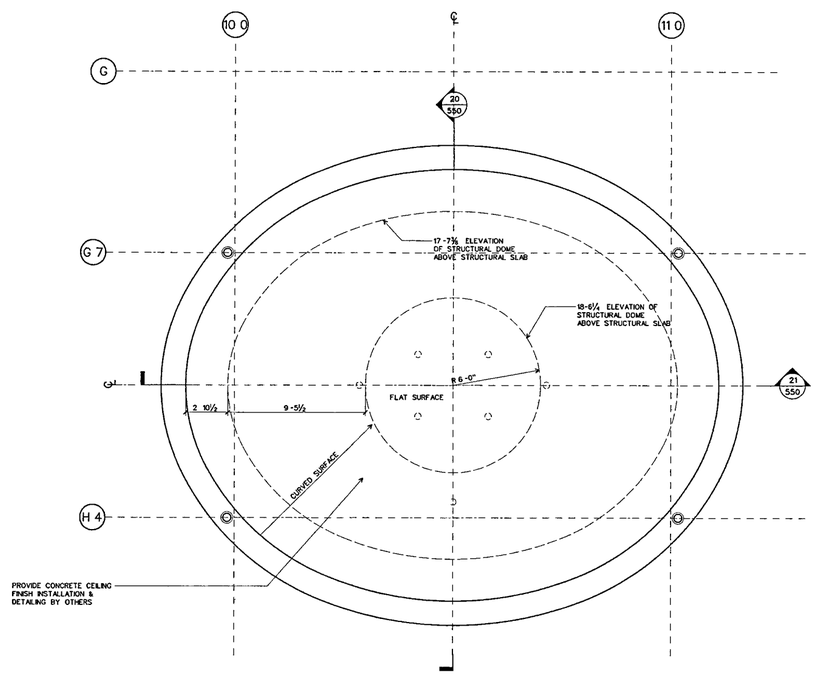

REFLECTED CEILING PLAN AT OVAL OFFICE (11)

SCALE ¼ = 1'-0" OVAL DGN

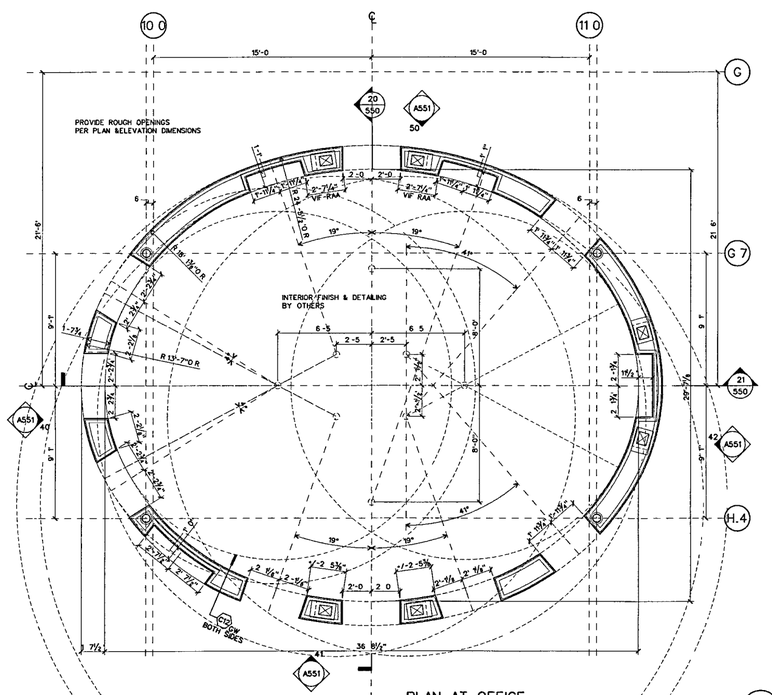

PLAN AT OFFICE (10)

SCALE ¼ = 1'-0 OVAL DGN

WILLIAM J CLINTON PRESIDENTIAL CENTER

LITTLE ROCK, ARKANSAS

Architect

POLSHEK PARTNERSHIP LLP
320 West 13th Street
New York, New York 10014
212 807 7171

Coordinating Architects

POLK STANLEY YEARY ARCHITECTS Ltd
700 South Schiller Street
Little Rock, Arkansas 72201
501 378 0878

WITSELL EVANS RASCO
901 West Third Street
Little Rock, Arkansas 72201
501 374 5300

WOODS CARADINE ARCHITECTS
2200 South Main Street
Little Rock Arkansas 72206
501 374 4060

Landscape Architects

HARGREAVES ASSOCIATES
118 Magazine Street
Cambridge Massachusettes 02139
617 661 0070

LANDSCAPE ARCHITECTURE Inc.
2300 Cottondale Lane Suite 202
Little Rock, Arkansas 72202
501 374 5610

Structural Engineer

LESLIE E. ROBERTSON ASSOC , RLLP
30 Broad Street, 47th Floor
New York, New York 10004
212 750 9000

MEP Engineers

FLACK + KURTZ Inc.
475 Fifth Avenue
New York, New York 10017
212 532.9600

CROMWELL ARCHITECTS ENGINEERS
101 South Spring Street
Little Rock, Arkansas 72201
501 372.2900

Curtainwall Consultant

R A. HEINTGES ARCHITECTS
126 Fifth Avenue, 9th Floor
New York New York 10011
212.652-2966

Seal

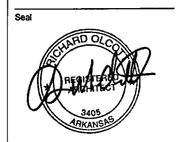

Issue	Date
100% Construction Documents	09/27/02
90% Progress Printing	08/30/02
100% Struct./ CD Progress	07/01/02

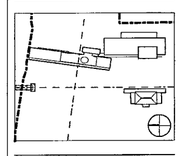

Job No 9908

Scale 1/4" = 1'-0"

Date September 27, 2002

Title

GEOMETRY DRAWING OF OVAL OFFICE STRUCTURAL DOME

Sheet No

A550

FOR OFFICIAL USE ONLY

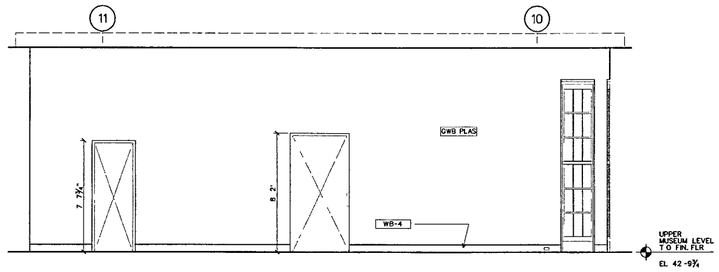

4-02 SKY LOBBY: PARTIAL WEST ELEVATION (50)
SCALE ¼" = 1'-0" 9908/base/elev/b-inel15

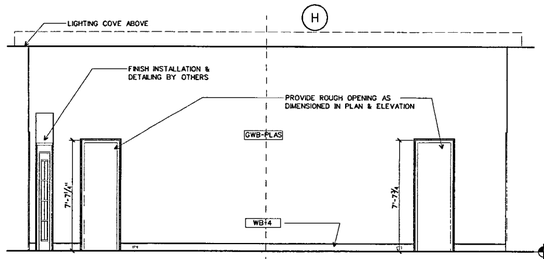

4-02 SKY LOBBY: PARTIAL NORTH ELEVATION (42)
SCALE ¼ = 1'-0 9908/base/elev/b-inel15

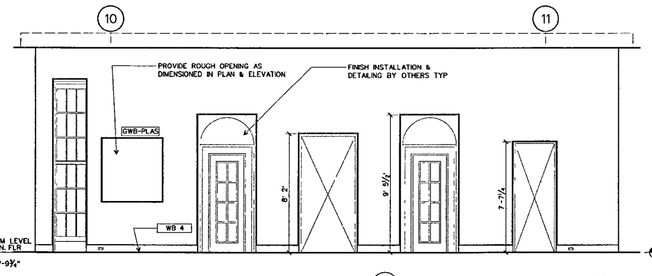

4-02 SKY LOBBY: PARTIAL WEST ELEVATION (41)
SCALE ¼ = 1'-0 9908/base/elev/b-inel15

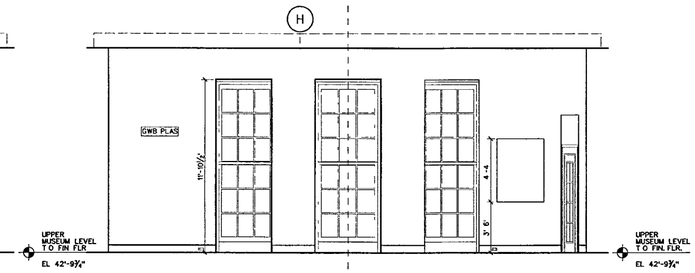

4-02 SKY LOBBY: PARTIAL SOUTH ELEVATION (40)
SCALE ¼ = 1'-0 9908/base/elev/b-inel15

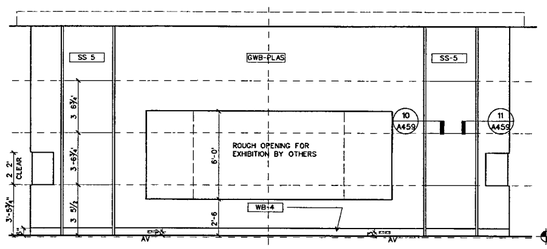

3-02 SKY LOBBY: PARTIAL SOUTH ELEVATION (32)
SCALE ¼" = 1'-0 9908/base/elev/b-inel15

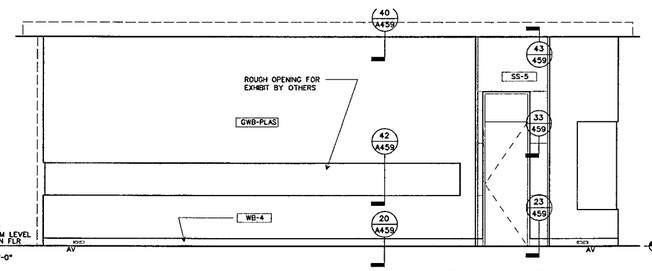

3-02 SKY LOBBY: PARTIAL EAST ELEVATION (31)
SCALE ¼" = 1'-0 9908/base/elev/b-inel15

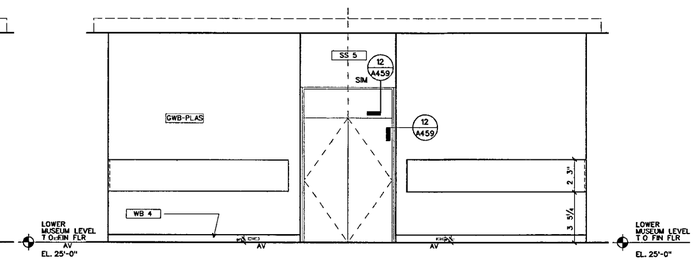

3-02 SKY LOBBY: PARTIAL NORTH ELEVATION (30)
SCALE ¼" = 1'-0" 9908/base/elev/b-inel15

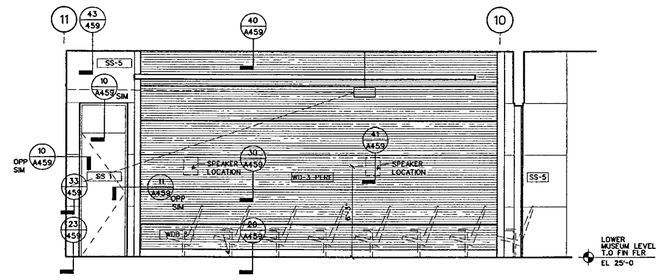

3-05 ORIENTATION THEATER: WEST ELEVATION (21)
SCALE ¼ = 1'-0" 9908/base/elev/b-inel14

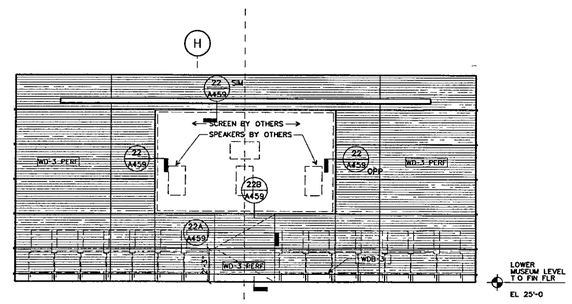

3-05 ORIENTATION THEATER: SOUTH ELEVATION (12)
SCALE ¼" = 1'-0 9908/base/elev/b-inel14

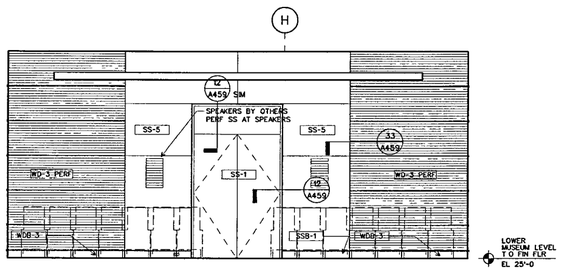

3-05 ORIENTATION THEATER: NORTH ELEVATION (11)
SCALE ¼ = 1'-0" 9908/base/elev/b-inel14

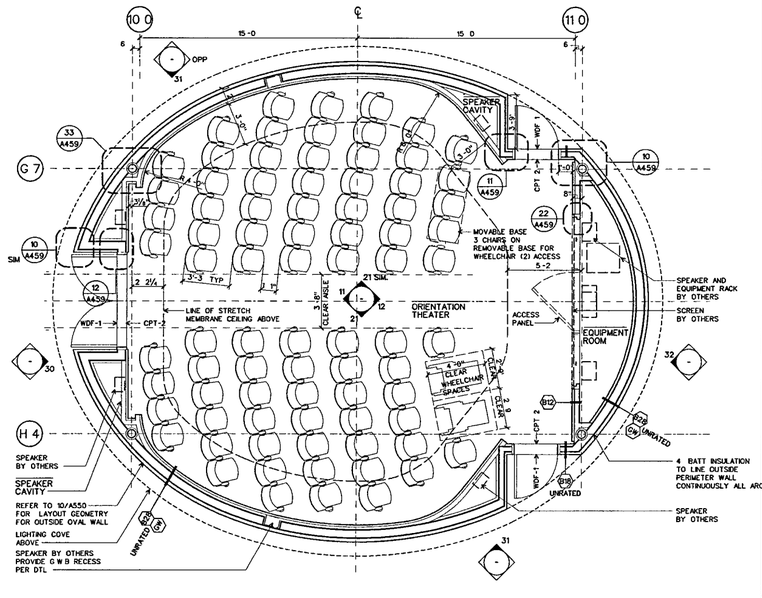

3-05 ORIENTATION THEATER ENLARGED PLAN (10)
SCALE ¼" = 1'-0 9908/base/plans/orientation

WILLIAM J CLINTON PRESIDENTIAL CENTER

LITTLE ROCK, ARKANSAS

Architect
POLSHEK PARTNERSHIP LLP
320 West 13th Street
New York, New York 10014
212 807 7171

Coordinating Architects
POLK STANLEY YEARY ARCHITECTS Ltd
700 South Schiller Street
Little Rock Arkansas 72201
501 378 0878

WITSELL EVANS RASCO
501 West Third Street
Little Rock, Arkansas 72201
501 374.5300

WOODS CARADINE ARCHITECTS
2200 South Main Street
Little Rock, Arkansas 72206
501 374 4050

Landscape Architects
HARGREAVES ASSOCIATES
118 Magazine Street
Cambridge Massachusetts 02139
617 661 0070

LANDSCAPE ARCHITECTURE Inc.
2300 Cottondale Lane Suite 202
Little Rock Arkansas 72202
501 374 5610

Structural Engineer
LESLIE E ROBERTSON ASSOC RLLP
30 Broad Street, 47th Floor
New York New York 10004
212 750 9000

MEP Engineers
FLACK + KURTZ Inc.
475 Fifth Avenue
New York New York 10017
212 532.9600

CROMWELL ARCHITECTS ENGINEERS
101 South Spring Street
Little Rock, Arkansas 72201
501 372 2900

Curtainwall Consultant
R. A. HEINTGES ARCHITECTS
128 Fifth Avenue, 9th Floor
New York, New York 10011
212 652-2966

Seal

Issue	Date
100% Construction Documents	09/27/02
90% Progress Printing	08/30/02
100% Struct./ CD Progress	07/01/02

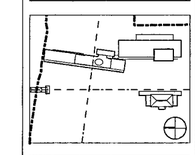

Job No 9908

Scale 1/4" = 1'-0"

Date September 27, 2002

Title
ORIENTATIONTHEATER ENLARGED PLANS AND ELEVATIONS

Sheet No
A551

FOR OFFICIAL USE ONLY

NOTE
1 THESE DRAWINGS SUPPLEMENT INFORMATION ON THE M E P /F P and SECURITY DRAWINGS AND ARE TO BE USED FOR DIMENSIONAL LOCATION OF ALL M E P /F P AND SECURITY SYSTEMS ALL M E P /F P AND SECURITY SYSTEMS SCOPE AND CONTENTS SHALL BE PER M E P AND SECURITY DRAWINGS
2 SEE M E P AND SECURITY DRAWINGS FOR ELECTRICAL MECHANICAL FIRE PROTECTION AND SECURITY DEVICE LOCATIONS IN THE FOLLOWING ROOMS JANITOR'S CLOSETS ELECTRICAL CLOSETS TELEPHONE AND DATA CLOSETS AV STORAGE CLOSETS KITCHENS AND GENERAL STORAGE ROOMS
3 NOTIFY THE ARCHITECT IN THE EVENT OF ANY DISCREPANCIES BETWEEN THE MECHANICAL ELECTRICAL PLUMBING FIRE PROTECTION AND SECURITY DRAWINGS AND THE REFLECTED CEILING PLANS THE ARCHITECTURAL CEILING PLANS SHALL GOVERN ALL LOCATIONS AND DIMENSIONS OF ALL EXPOSED-TO VIEW ITEMS DO NOT PROCEED UNTIL DISCREPANCIES HAVE BEEN RESOLVED
4 FOR CEILING TYPE AND LOCATION OF FINISH REFER TO FINISH SCHEDULE
5 FOR CEILING HEIGHTS IN STAIRS SEE STAIR DETAILS
6 START POINT OF CEILING GRID SHALL BE CENTER OF TILE AT CENTER OF ROOM U O N
7 WHEN ACOUSTICAL CEILING TILE EXCEEDS 2 X2 PROVIDE 2 X 4 ACOUSTICAL CEILING TILE TO BE FIELD CUT
8 ALL CEILING MOUNTED DEVICES (INCLUDING EXIT SIGNS-NOT ADJACENT TO DOORS,SMOKE DETECTORS LIGHT FIXTURES) SHALL BE CENTERED ON CEILING TILE U O N
9 ALL FIRE STROBES SHALL BE LOCATED 6½ FROM THE ADJACENT DOOR FRAME TO THE CENTERLINE OF THE STROBE U O N ON EITHER THE REFLECTED CEILING PLANS OR THE INTERIOR ELEVATIONS
10 STEM AND PENDANT MOUNTED FIXTURES SHALL BE INSTALLED AT HEIGHT (BOTTOM OF FIXTURE A.F.F.) INDICATED IN THE SPECIFICATIONS

KEY	
EXPOSED AND SEALED SLAB	PLASTER FINISH
PTD GWB	2 X2 CLG TILES NOTE WASHABLE SURFACE IN ALL KITCHEN/PANTRY AREAS
PERFORATED WOOD ACOUSTICAL PANEL W/ BATT INSULATION	PERFORATED METAL ACOUSTICAL PANEL OR AIR REGISTER WHERE NOTED
PAINTED ALUMINUM PANEL SYSTEM	REBED WOOD ACOUSTIC PANEL
EXPOSED AND SEALED WAFFLE SLAB	ARCHITECTURAL ACOUSTICAL PANELS
ORNAMENTAL GLASS AND METAL CANOPY	FIELD FINISHED MINERAL FIBER ACOUSTIC PANEL OVER GYP BD CEILING ASSEMBLY
STAINLESS STEEL FINISH	

RCP DEVICE KEY	
	FLOOR/CEILING OUTLET
	SPEAKER/STROBE
	GLASS BREAK DETECTOR
	CEIL MTD MOTION DETECTOR
	WALL MTD MOTION DETECTOR
	CEIL MTD SECURITY SPEAKER
	WALL MTD SECURITY SPEAKER
	CEIL MTD AV SPEAKER
	WALL MTD AV SPEAKER
	SECURITY CAMERA
	CLG MTD SMOKE/HEAT DETECTOR
	CLG MTD EXIT
	WALL MTD EXIT
	CLG MTD SPRINKLER HEAD
	WALL MTD SPRINKLER HEAD
	RETURN OUTLET CLG DIFFUSER
	SUPPLY OUTLET CLG DIFFUSER
LD	LINEAR SUPPLY DIFFUSER
	WIRELESS ALARM ANTENNA/ TRANSMITTER
	TELEVISION OUTLET

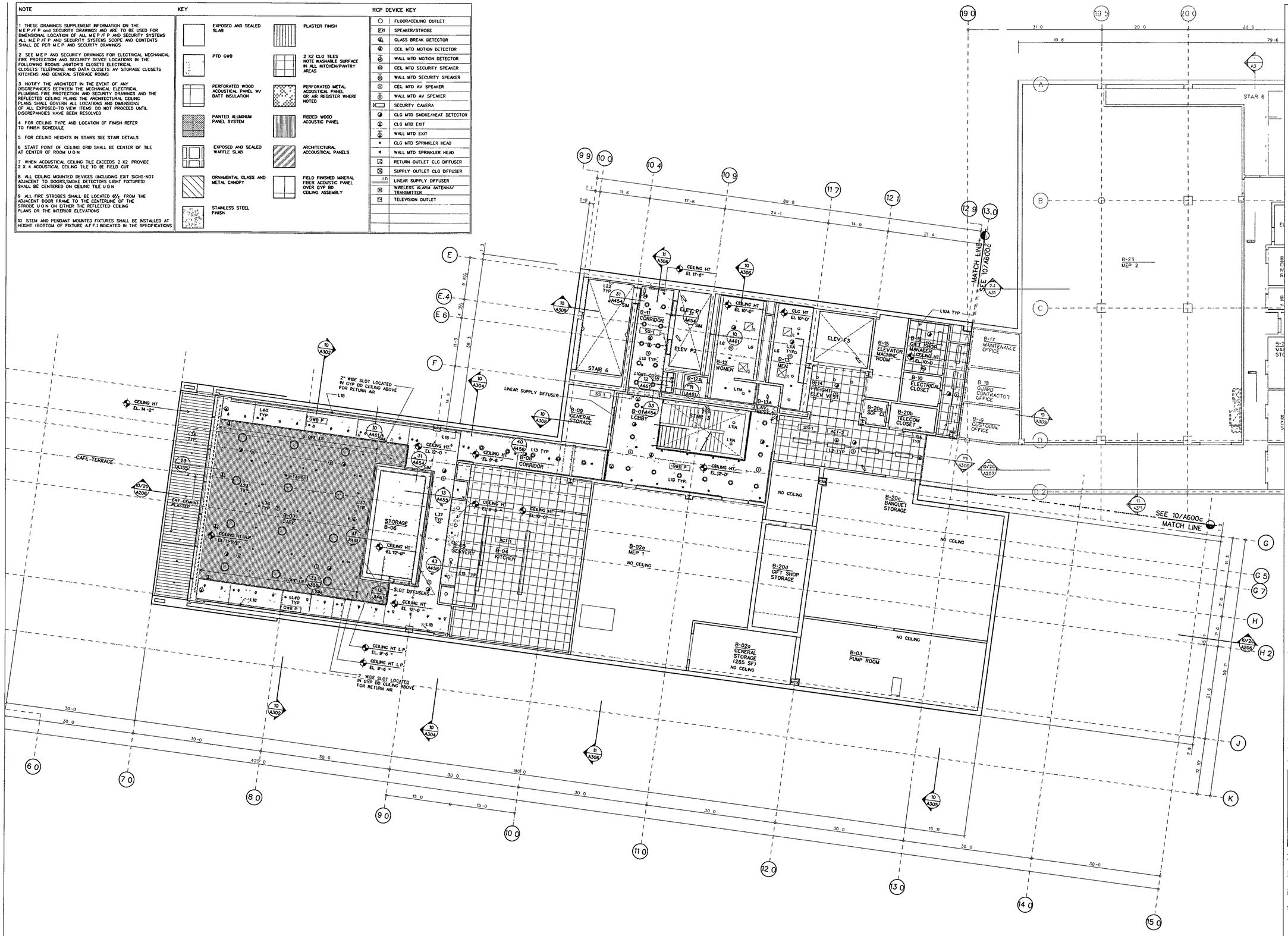

BASEMENT LEVEL REFLECTED CEILING PLAN B

SCALE 1/8" = 1'-0

RCP-00B DGN

10

WILLIAM J CLINTON PRESIDENTIAL CENTER

LITTLE ROCK, ARKANSAS

Architect

POLSHEK PARTNERSHIP LLP
320 West 13th Street
New York, New York 10014
212 807 7171

Coordinating Architects

POLK STANLEY YEARY ARCHITECTS Ltd
700 South Schiller Street
Little Rock, Arkansas 72201
501 378 0878

WITSELL EVANS RASCO
901 West Third Street
Little Rock Arkansas 72201
501 374 5300

WOODS CARADINE ARCHITECTS
2200 South Main Street
Little Rock, Arkansas 72206
501 374 4069

Landscape Architects

HARGREAVES ASSOCIATES
118 Magazine Street
Cambridge Massachusettes 02139
617 661 0070

LANDSCAPE ARCHITECTURE Inc.
2300 Cottondale Lane Suite 202
Little Rock, Arkansas 72202
501 374 5810

Structural Engineer

LESLIE E. ROBERTSON ASSOC., RLLP
30 Broad Street, 47th Floor
New York, New York 10004
212 750 9000

MEP Engineers

FLACK + KURTZ Inc.
475 Fifth Avenue
New York, New York 10017
212.532 9600

CROMWELL ARCHITECTS ENGINEERS
101 South Spring Street
Little Rock, Arkansas 72201
501 372 2900

Curtainwall Consultant

R. A. HEINTGES ARCHITECTS
126 Fifth Avenue, 9th Floor
New York, New York 10011
212 652-2966

Seal

RICHARD OLCOTT REGISTERED ARCHITECT 3405 ARKANSAS

Issue	Date
100% Construction Documents	09/27/02
90% Progress Printing	08/30/02
100% Struct./ CD Progress	07/01/02
Bridge Bldg Substructure	06/14/02
100% Steel & Concrete CD & Architectural CD Progress	05/15/02
100% Design Development	03/01/02

Job No 9908

Scale 1/8" = 1'-0"

Date September 27, 2002

Title BASEMENT LEVEL PARTIAL REFLECTED CEILING PLAN

Sheet No A600b

FOR OFFICIAL USE ONLY

NOTE	KEY	RCP DEVICE KEY
1 THESE DRAWINGS SUPPLEMENT INFORMATION ON THE M E P /F P and SECURITY DRAWINGS AND ARE TO BE USED FOR DIMENSIONAL LOCATION OF ALL M E P /F P AND SECURITY SYSTEMS ALL M E P /F P AND SECURITY SYSTEMS SCOPE AND CONTENTS SHALL BE PER M E P AND SECURITY DRAWINGS 2 SEE M E P AND SECURITY DRAWINGS FOR ELECTRICAL MECHANICAL FIRE PROTECTION AND SECURITY DEVICE LOCATIONS IN THE FOLLOWING ROOMS JANITOR'S CLOSETS ELECTRICAL CLOSETS TELEPHONE AND DATA CLOSETS, AV STORAGE CLOSETS, KITCHENS AND GENERAL STORAGE ROOMS 3 NOTIFY THE ARCHITECT IN THE EVENT OF ANY DISCREPANCIES BETWEEN THE MECHANICAL ELECTRICAL PLUMBING FIRE PROTECTION AND SECURITY DRAWINGS AND THE REFLECTED CEILING PLANS THE ARCHITECTURAL CEILING PLANS SHALL GOVERN ALL LOCATIONS AND DIMENSIONS OF ALL EXPOSED TO VIEW ITEMS DO NOT PROCEED UNTIL DISCREPANCIES HAVE BEEN RESOLVED 4 FOR CEILING TYPE AND LOCATION OF FINISH REFER TO FINISH SCHEDULE 5 FOR CEILING HEIGHTS IN STAIRS SEE STAIR DETAILS 6 START POINT OF CEILING GRID SHALL BE CENTER OF TILE AT CENTER OF ROOM U O N 7 WHEN ACOUSTICAL CEILING TILE EXCEEDS 2 X2 PROVIDE 2 X 4 ACOUSTICAL CEILING TILE TO BE FIELD CUT 8 ALL CEILING MOUNTED DEVICES (INCLUDING EXIT SIGNS NOT ADJACENT TO DOORS/SMOKE DETECTORS LIGHT FIXTURES) SHALL BE CENTERED ON CEILING TILE U O N 9 ALL FIRE STROBES SHALL BE LOCATED 6½ FROM THE ADJACENT DOOR FRAME TO THE CENTERLINE OF THE STROBE U O N ON EITHER THE REFLECTED CEILING PLANS OR THE INTERIOR ELEVATIONS 10 STEM AND PENDANT MOUNTED FIXTURES SHALL BE INSTALLED AT HEIGHT (BOTTOM OF FIXTURE A F F) INDICATED IN THE SPECIFICATIONS	EXPOSED AND SEALED SLAB PLASTER FINISH PTD GWB 2'X2' CLG TILES NOTE/WASHABLE SURFACE IN ALL KITCHENS/PANTRY AREAS PERFORATED WOOD ACOUSTICAL PANEL W/ BATT INSULATION PERFORATED METAL ACOUSTICAL PANEL OR AIR REGISTER WHERE NOTED PAINTED ALUMINUM PANEL SYSTEM RIBBED WOOD ACOUSTIC PANEL EXPOSED AND SEALED WAFFLE SLAB ARCHITECTURAL ACOUSTICAL PANELS ORNAMENTAL GLASS AND METAL CANOPY FIELD FINISHED MINERAL FIBER ACOUSTIC PANEL OVER GYP BD CEILING ASSEMBLY STAINLESS STEEL FINISH	FLOOR/CEILING OUTLET SPEAKER/STROBE GLASS BREAK DETECTOR CEIL MTD MOTION DETECTOR WALL MTD MOTION DETECTOR CEIL MTD SECURITY SPEAKER WALL MTD SECURITY SPEAKER CEIL MTD AV SPEAKER WALL MTD AV SPEAKER SECURITY CAMERA CLG MTD. SMOKE/HEAT DETECTOR CLG MTD EXIT WALL MTD EXIT CLG MTD SPRINKLER HEAD WALL MTD SPRINKLER HEAD RETURN OUTLET CLG DIFFUSER SUPPLY OUTLET CLG DIFFUSER LD LINEAR SUPPLY DIFFUSER WIRELESS ALARM ANTENNA/ TRANSMITTER TELEVISION OUTLET CIRCULAR DIFFUSER

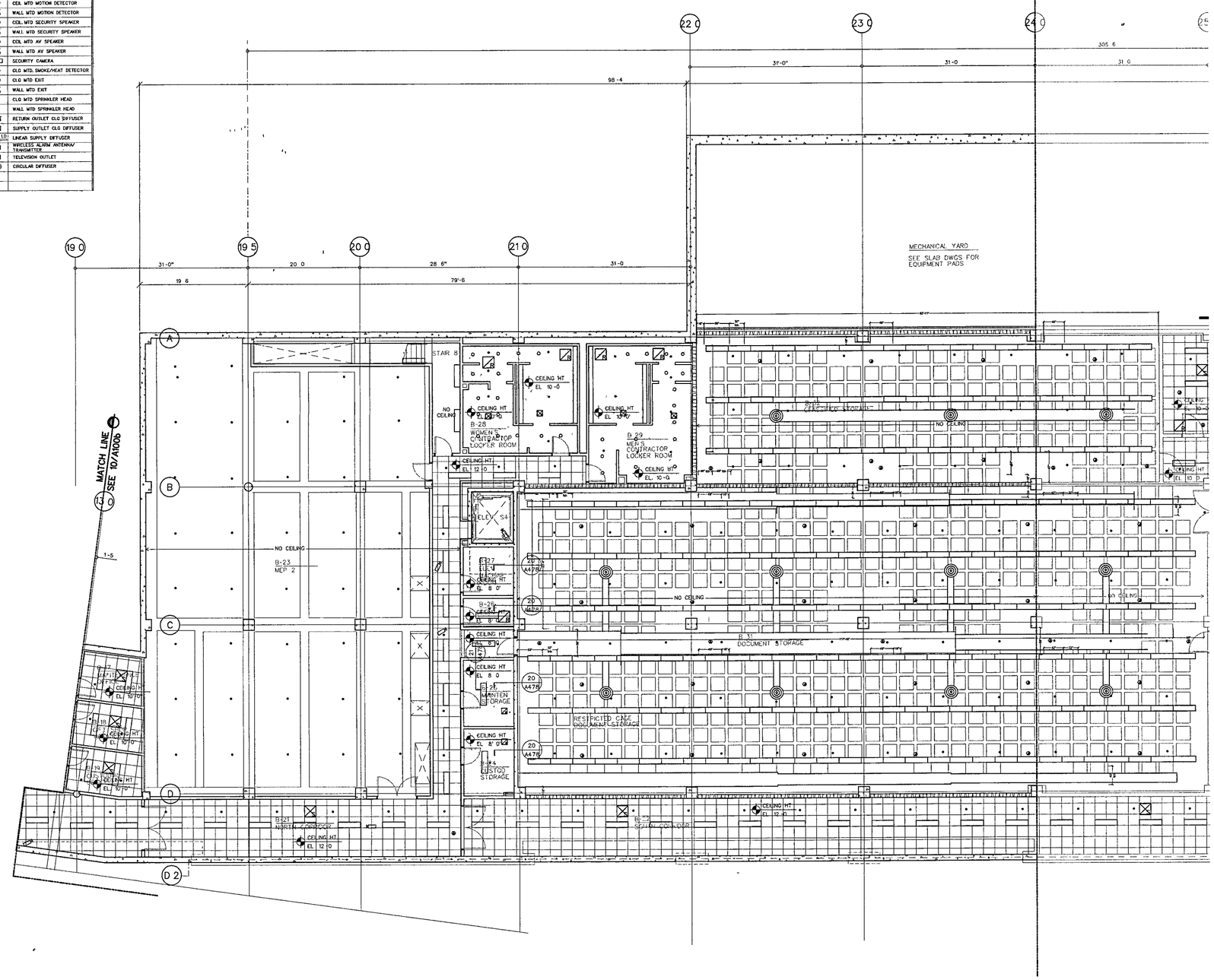

BASEMENT LEVEL PARTIAL REFLECTED CEILING PLAN C

SCALE 1/8" = 1'-0"

AFP-00B dwg

10

WILLIAM J CLINTON PRESIDENTIAL CENTER

LITTLE ROCK ARKANSAS

Architect

POLSHEK PARTNERSHIP LLP
320 West 13th Street
New York New York 10014
212 807 7171

Coordinating Architects

POLK STANLEY YEARY ARCHITECTS Ltd
700 South Schiller Street
Little Rock, Arkansas 72201
501 378 0878

WITSELL EVANS RASCO
901 West Third Street
Little Rock, Arkansas 72201
501 374 5300

WOODS CARADINE ARCHITECTS
2200 South Main Street
Little Rock, Arkansas 72206
501 374 4060

Landscape Architects

HARGREAVES ASSOCIATES
118 Magazine Street
Cambridge Massachusettes 02139
617 661 0070

LANDSCAPE ARCHITECTURE Inc
2300 Cottondale Lane Suite 202
Little Rock, Arkansas 72202
501 374 5610

Structural Engineer

LESLIE E ROBERTSON ASSOC , RLLP
30 Broad Street 47th Floor
New York New York 10004
212 750 9000

MEP Engineers

FLACK + KURTZ Inc
475 Fifth Avenue
New York, New York 10017
212 532 9600

CROMWELL ARCHITECTS ENGINEERS
101 South Spring Street
Little Rock, Arkansas 72201
501 372 2900

Curtainwall Consultant

R A HEINTGES ARCHITECTS
126 Fifth Avenue 9th Floor
New York, New York 10011
212 652 2966

Seal

WITSELL EVANS & RASCO P.A. REGISTERED ARCHITECTS NO 1544 ARKANSAS

Issue	Date
100% Construction Documents	09/27/02
90% Progress Printing	08/30/02
100% Struct./CD Progress	07/01/02
Bridge Bldg Substructure	06/14/02
100% Steel & Concrete CD & Architectural CD Progress	05/15/02
100% Design Development	03/01/02

Job No 9908

Scale 1/8" = 1'-0"

Date September 27 2002

Title BASEMENT LEVEL PARTIAL REFLECTED CEILING PLAN

Sheet No A600c

FOR OFFICIAL USE ONLY

NOTE-

1 THESE DRAWINGS SUPPLEMENT INFORMATION ON THE M E P/F P and SECURITY DRAWINGS AND ARE TO BE USED FOR DIMENSIONAL LOCATION OF ALL M E P/F P AND SECURITY SYSTEMS ALL M E P/F P AND SECURITY SYSTEMS SCOPE AND CONTENTS SHALL BE PER M E P AND SECURITY DRAWINGS

2 SEE M E P AND SECURITY DRAWINGS FOR ELECTRICAL MECHANICAL, FIRE PROTECTION AND SECURITY DEVICE LOCATIONS IN THE FOLLOWING ROOMS JANITOR'S CLOSETS ELECTRICAL CLOSETS TELEPHONE AND DATA CLOSETS AV STORAGE CLOSETS KITCHENS AND GENERAL STORAGE ROOMS

3 NOTIFY THE ARCHITECT IN THE EVENT OF ANY DISCREPANCIES BETWEEN THE MECHANICAL ELECTRICAL PLUMBING FIRE PROTECTION AND SECURITY DRAWINGS AND THE REFLECTED CEILING PLANS THE ARCHITECTURAL CEILING PLANS SHALL GOVERN ALL LOCATIONS AND DIMENSIONS OF ALL EXPOSED TO VIEW ITEMS DO NOT PROCEED UNTIL DISCREPANCIES HAVE BEEN RESOLVED

4 FOR CEILING TYPE AND LOCATION OF FINISH REFER TO FINISH SCHEDULE

5 FOR CEILING HEIGHTS IN STAIRS, SEE STAIR DETAILS

6 START POINT OF CEILING GRID SHALL BE CENTER OF TILE AT CENTER OF ROOM U O N

7 WHEN ACOUSTICAL CEILING TILE EXCEEDS 2 X2 PROVIDE 2 X 4 ACOUSTICAL CEILING TILE TO BE FIELD CUT

8 ALL CEILING MOUNTED DEVICES (INCLUDING EXIT SIGNS NOT ADJACENT TO DOORS SMOKE DETECTORS LIGHT FIXTURES) SHALL BE CENTERED ON CEILING TILE U O N

9 ALL FIRE STROBES SHALL BE LOCATED 6½" FROM THE ADJACENT DOOR FRAME TO THE LOCATIONS OF THE STROBE U O N, ON EITHER THE REFLECTED CEILING PLANS OR THE INTERIOR ELEVATIONS

10. STEM AND PENDANT MOUNTED FIXTURES SHALL BE INSTALLED AT HEIGHT (BOTTOM OF FIXTURE A F F) INDICATED IN THE SPECIFICATIONS

KEY

- EXPOSED AND SEALED SLAB
- PTD GWB
- PERFORATED WOOD ACOUSTICAL PANEL W/ BATT INSULATION
- PAINTED ALUMINUM PANEL SYSTEM
- EXPOSED AND SEALED WAFFLE SLAB
- ORNAMENTAL GLASS AND METAL CANOPY
- STAINLESS STEEL FINISH
- PLASTER FINISH
- 2 X2' CLG TILES NOTE/ACKABLE SURFACE IN ALL KITCHENS/PANTRY AREAS
- PERFORATED METAL ACOUSTICAL PANEL OR AIR REGISTER WHERE NOTED
- RIBBED WOOD ACOUSTIC PANEL
- ARCHITECTURAL ACOUSTICAL PANELS
- FIELD FINISHED MINERAL FIBER ACOUSTIC PANEL OVER GYP BD CEILING ASSEMBLY

RCP DEVICE KEY

- FLOOR/CEILING OUTLET
- SPEAKER/STROBE
- GLASS BREAK DETECTOR
- CEIL MTD MOTION DETECTOR
- WALL MTD MOTION DETECTOR
- CEIL MTD SECURITY SPEAKER
- WALL MTD SECURITY SPEAKER
- CEIL MTD AV SPEAKER
- WALL MTD AV SPEAKER
- SECURITY CAMERA
- CLG MTD SMOKE/HEAT DETECTOR
- CLG MTD EXIT
- WALL MTD EXIT
- CLG MTD SPRINKLER HEAD
- WALL MTD SPRINKLER HEAD
- RETURN OUTLET CLG DIFFUSER
- SUPPLY OUTLET CLG DIFFUSER
- LINEAR SUPPLY DIFFUSER
- WIRELESS ALARM ANTENNA/ TRANSMITTER
- TELEVISION OUTLET
- CIRCULAR DIFFUSER

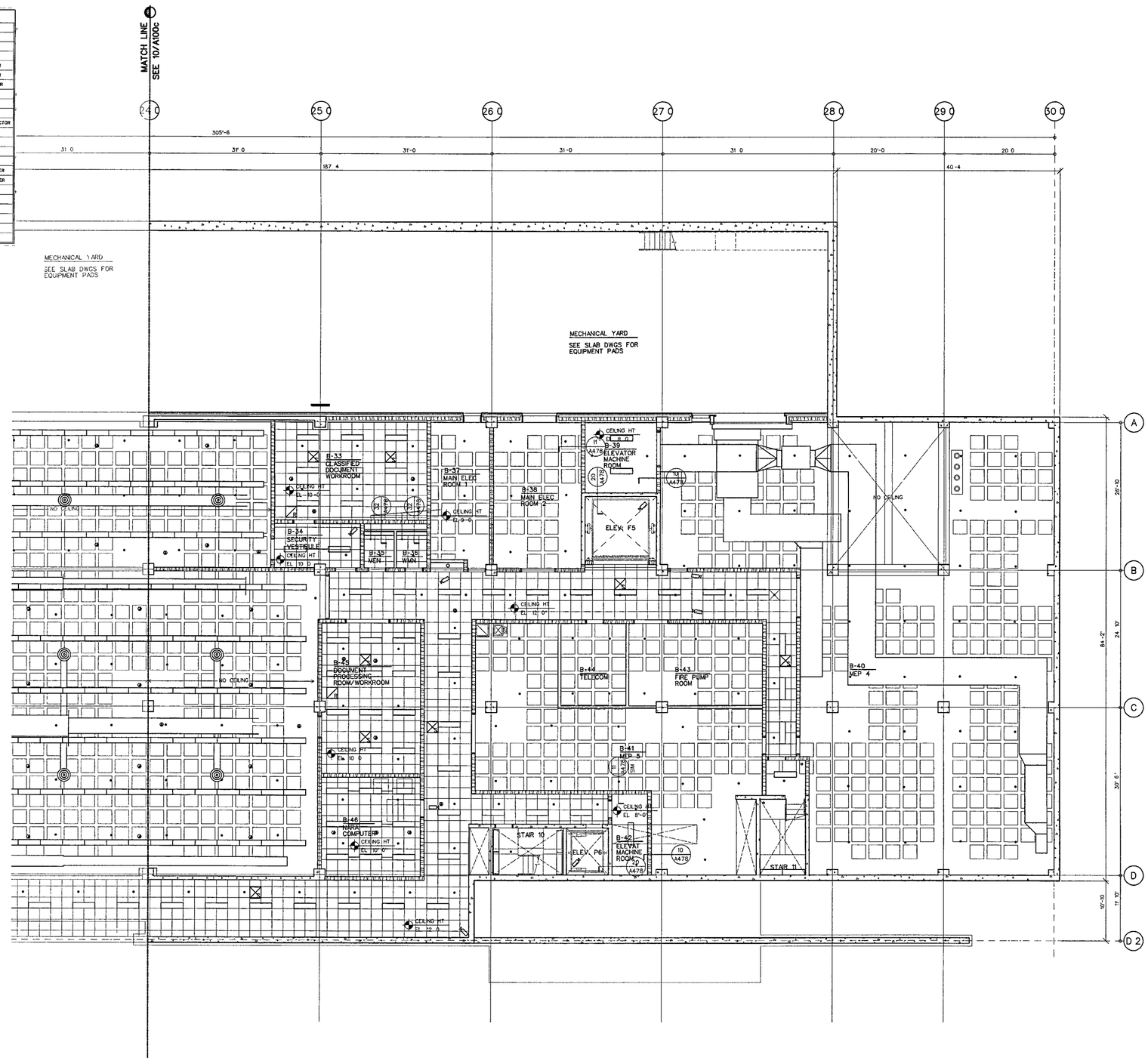

BASEMENT LEVEL PARTIAL REFLECTED CEILING PLAN D

SCALE 1/8" = 1'-0"

RCP-00B DWG 10

WILLIAM J CLINTON PRESIDENTIAL CENTER

LITTLE ROCK, ARKANSAS

Architect

POLSHEK PARTNERSHIP LLP
320 West 13th Street
New York, New York 10014
212 807 7171

Coordinating Architects

POLK STANLEY YEARY ARCHITECTS Ltd
700 South Schiller Street
Little Rock, Arkansas 72201
501 378 0878

WITSELL EVANS RASCO
901 West Third Street
Little Rock Arkansas 72201
501 374 5300

WOODS CARADINE ARCHITECTS
2200 South Main Street
Little Rock Arkansas 72206
501 374.4060

Landscape Architects

HARGREAVES ASSOCIATES
118 Magazine Street
Cambridge, Massachusettes 02139
617 661 0070

LANDSCAPE ARCHITECTURE Inc
2300 Cottondale Lane Suite 202
Little Rock, Arkansas 72202
501 374 5610

Structural Engineer

LESLIE E ROBERTSON ASSOC RLLP
30 Broad Street, 47th Floor
New York New York 10004
212 750 9000

MEP Engineers

FLACK + KURTZ Inc
475 Fifth Avenue
New York New York 10017
212 532 9600

CROMWELL ARCHITECTS ENGINEERS
101 South Spring Street
Little Rock Arkansas 72201
501 372 2900

Curtainwall Consultant

R. A HEINTGES ARCHITECTS
126 Fifth Avenue 9th Floor
New York, New York 10011
212 652 2966

Seal

WITSELL, EVANS & RASCO, P.A. REGISTERED ARCHITECTS 09-27-02 NO. 0344 ARKANSAS

Issue	Date
100% Construction Documents	09/27/02
90% Progress Prntbng	08/30/02
100% Struct/CD Progress	07/01/02
Bridge Bldg Substructure	06/14/02
100% Steel & Concrete CD & Architectural CD Progress	05/15/02
100% Design Development	03/01/02

Job No 9908

Scale 1/8" = 1'-0"

Date September 27, 2002

Title BASEMENT LEVEL PARTIAL REFLECTED CEILINGPLAN

Sheet No A600d

FOR OFFICIAL USE ONLY

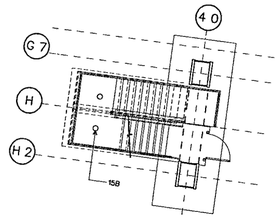

REFLECTED CEILING PLAN AT STAIR 2 LANDING (20)

SCALE 1/8 - 1-0 RCP-00B DGN

NOTE

1 THESE DRAWINGS SUPPLEMENT INFORMATION ON THE M E P /F P and SECURITY DRAWINGS AND ARE TO BE USED FOR DIMENSIONAL LOCATION OF ALL M.E.P./F P AND SECURITY SYSTEMS ALL M E P /F P AND SECURITY SYSTEMS SCOPE AND CONTENTS SHALL BE PER M E P AND SECURITY DRAWINGS

2 SEE M E P AND SECURITY DRAWINGS FOR ELECTRICAL MECHANICAL, FIRE PROTECTION AND SECURITY DEVICE LOCATIONS IN THE FOLLOWING ROOMS JANITOR'S CLOSETS ELECTRICAL CLOSETS TELEPHONE AND DATA CLOSETS AV STORAGE CLOSETS KITCHENS AND GENERAL STORAGE ROOMS

3 NOTIFY THE ARCHITECT IN THE EVENT OF ANY DISCREPANCIES BETWEEN THE MECHANICAL ELECTRICAL PLUMBING FIRE PROTECTION AND SECURITY DRAWINGS AND THE REFLECTED CEILING PLANS THE ARCHITECTURAL CEILING PLANS SHALL GOVERN ALL LOCATIONS AND DIMENSIONS OF ALL EXPOSED-TO VIEW ITEMS DO NOT PROCEED UNTIL DISCREPANCIES HAVE BEEN RESOLVED

4 FOR CEILING TYPE AND LOCATION OF FINISH REFER TO FINISH SCHEDULE

5 FOR CEILING HEIGHTS IN STAIRS SEE STAIR DETAILS

6 START POINT OF CEILING GRID SHALL BE CENTER OF TILE AT CENTER OF ROOM U O N

7 WHEN ACOUSTICAL CEILING TILE EXCEEDS 2 X2 PROVIDE 2 X 4 ACOUSTICAL CEILING TILE TO BE FIELD CUT

8 ALL CEILING MOUNTED DEVICES (INCLUDING EXIT SIGNS-NOT ADJACENT TO DOORS SMOKE DETECTORS LIGHT FIXTURES) SHALL BE CENTERED ON CEILING TILE U O N

9 ALL FIRE STROBES SHALL BE LOCATED 6½ FROM THE ADJACENT DOOR FRAME TO THE CENTERLINE OF THE STROBE U O N. ON EITHER THE REFLECTED CEILING PLANS OR THE INTERIOR ELEVATIONS

10 STEM AND PENDANT MOUNTED FIXTURES SHALL BE INSTALLED AT HEIGHT (BOTTOM OF FIXTURE A F F) INDICATED IN THE SPECIFICATIONS

KEY

EXPOSED AND SEALED SLAB	PLASTER FINISH
PTD GWB	2 X2 CLG TILES NOTE WASHABLE SURFACE IN ALL KITCHEN/PANTRY AREAS
PERFORATED WOOD ACOUSTICAL PANEL W/ BATT INSULATION	PERFORATED METAL ACOUSTICAL PANEL OR AIR REGISTER WHERE NOTED
PAINTED ALUMINUM PANEL SYSTEM	RIBBED WOOD ACOUSTIC PANEL
EXPOSED AND SEALED WAFFLE SLAB	ARCHITECTURAL ACOUSTICAL PANELS
ORNAMENTAL GLASS AND METAL CANOPY	FIELD FINISHED MINERAL FIBER ACOUSTIC PANEL OVER GYP BD CEILING ASSEMBLY
STAINLESS STEEL FINISH	

RCP DEVICE KEY

	FLOOR/CEILING OUTLET
EH	SPEAKER/STROBE
	GLASS BREAK DETECTOR
	CEIL MTD MOTION DETECTOR
	WALL MTD MOTION DETECTOR
	CEIL MTD SECURITY SPEAKER
	WALL MTD SECURITY SPEAKER
	CEIL MTD AV SPEAKER
	WALL MTD AV SPEAKER
	SECURITY CAMERA
	CLG MTD SMOKE/HEAT DETECTOR
	CLG MTD EXIT
	WALL MTD EXIT
	CLG MTD SPRINKLER HEAD
	WALL MTD SPRINKLER HEAD
	RETURN OUTLET CLG DIFFUSER
	SUPPLY OUTLET CLG DIFFUSER
LD	LINEAR SUPPLY DIFFUSER
	WIRELESS ALARM ANTENNA/ TRANSMITTER
	TELEVISION OUTLET

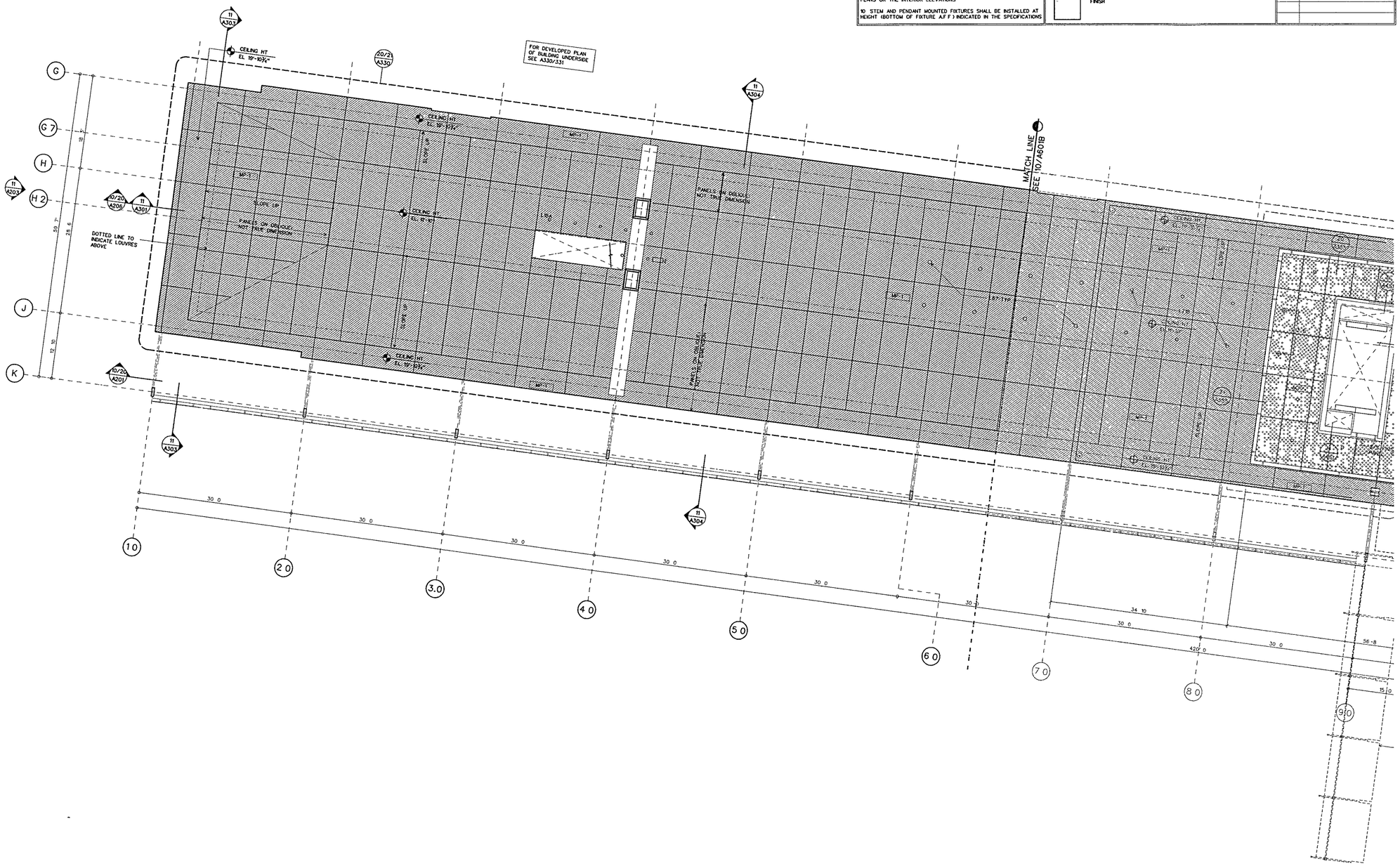

GROUND LEVEL REFLECTED CEILING PLAN A

SCALE 1/8" - 1'-0" RCP-01 DGN (10)

WILLIAM J CLINTON PRESIDENTIAL CENTER

LITTLE ROCK, ARKANSAS

Architect

POLSHEK PARTNERSHIP LLP
320 West 13th Street
New York, New York 10014
212 807 7171

Coordinating Architects

POLK STANLEY YEARY ARCHITECTS Ltd
700 South Schiller Street
Little Rock, Arkansas 72201
501 378 0878

WITSELL EVANS RASCO
901 West Third Street
Little Rock, Arkansas 72201
501.374 5300

WOODS CARADINE ARCHITECTS
2200 South Main Street
Little Rock, Arkansas 72206
501 374 4060

Landscape Architects

HARGREAVES ASSOCIATES
118 Magazine Street
Cambridge Massachusettes 02139
617 661 0070

LANDSCAPE ARCHITECTURE Inc.
2300 Cottondale Lane Suite 202
Little Rock, Arkansas 72202
501 374 5610

Structural Engineer

LESLIE E. ROBERTSON ASSOC RLLP
30 Broad Street, 47th Floor
New York New York 10004
212 750 9000

MEP Engineers

FLACK + KURTZ Inc.
475 Fifth Avenue
New York, New York 10017
212.532 9600

CROMWELL ARCHITECTS ENGINEERS
101 South Spring Street
Little Rock, Arkansas 72201
501 372 2900

Curtainwall Consultant

R A HEINTGES ARCHITECTS
126 Fifth Avenue 5th Floor
New York, New York 10011
212 652-2966

Seal

Issue	Date
100% Construction Documents	09/27/02
90% Progress Printing	08/30/02
100% Struct./ CD Progress	07/01/02
Bridge Bldg Substructure	06/14/02
100% Steel & Concrete CD	05/15/02
& Architectural CD Progress	
100% Design Development	03/01/02

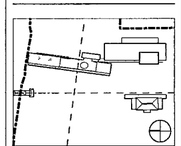

Job No 9908

Scale 1/8" = 1'-0"

Date September 27, 2002

Title GROUND LEVEL PARTIAL REFLECTED CEILING PLAN

Sheet No A601a

FOR OFFICIAL USE ONLY

NOTE

1. THESE DRAWINGS SUPPLEMENT INFORMATION ON THE M E P /F P and SECURITY DRAWINGS AND ARE TO BE USED FOR DIMENSIONAL LOCATION OF ALL M.E.P./F P AND SECURITY SYSTEMS ALL M E P /F P AND SECURITY SYSTEMS SCOPE AND CONTENTS SHALL BE PER M E P AND SECURITY DRAWINGS

2 SEE M E P AND SECURITY DRAWINGS FOR ELECTRICAL MECHANICAL FIRE PROTECTION AND SECURITY DEVICE LOCATIONS IN THE FOLLOWING ROOMS JANITOR'S CLOSETS ELECTRICAL CLOSETS TELEPHONE AND DATA CLOSETS AV STORAGE CLOSETS KITCHENS AND GENERAL STORAGE ROOMS

3 NOTIFY THE ARCHITECT IN THE EVENT OF ANY DISCREPANCIES BETWEEN THE MECHANICAL ELECTRICAL PLUMBING FIRE PROTECTION AND SECURITY DRAWINGS AND THE REFLECTED CEILING PLANS THE ARCHITECTURAL CEILING PLANS SHALL GOVERN ALL LOCATIONS AND DIMENSIONS OF ALL EXPOSED-TO VIEW ITEMS DO NOT PROCEED UNTIL DISCREPANCIES HAVE BEEN RESOLVED

4 FOR CEILING TYPE AND LOCATION OF FINISH REFER TO FINISH SCHEDULE

5 FOR CEILING HEIGHTS IN STAIRS SEE STAIR DETAILS

6 START POINT OF CEILING GRID SHALL BE CENTER OF TILE AT CENTER OF ROOM U O N

7 WHEN ACOUSTICAL CEILING TILE EXCEEDS 2 X2 PROVIDE 2 X 4 ACOUSTICAL CEILING TILE TO BE FIELD CUT

8 ALL CEILING MOUNTED DEVICES (INCLUDING EXIT SIGNS-NOT ADJACENT TO DOORS SMOKE DETECTORS, LIGHT FIXTURES) SHALL BE CENTERED ON CEILING TILE U O N

9 ALL FIRE STROBES SHALL BE LOCATED 6½" FROM THE ADJACENT DOOR FRAME TO THE CENTERLINE OF THE STROBE U O N ON EITHER THE REFLECTED CEILING PLANS OR THE INTERIOR ELEVATIONS

10 STEM AND PENDANT MOUNTED FIXTURES SHALL BE INSTALLED AT HEIGHT (BOTTOM OF FIXTURE A.F.F.) INDICATED IN THE SPECIFICATIONS

KEY

- EXPOSED AND SEALED SLAB
- PLASTER FINISH
- PTD GWB
- 2'X2 CLG TILES NOTE WASHABLE SURFACE IN ALL KITCHEN/PANTRY AREAS
- PERFORATED WOOD ACOUSTICAL PANEL W/ BATT INSULATION
- PERFORATED METAL ACOUSTICAL PANEL OR AIR REGISTER WHERE NOTED
- PAINTED ALUMINUM PANEL SYSTEM
- RIBBED WOOD ACOUSTIC PANEL
- EXPOSED AND SEALED WAFFLE SLAB
- ARCHITECTURAL ACOUSTICAL PANELS
- ORNAMENTAL GLASS AND METAL CANOPY
- FIELD FINISHED MINERAL FIBER ACOUSTIC PANEL OVER GYP BD CEILING ASSEMBLY
- STAINLESS STEEL FINISH

RCP DEVICE KEY

- FLOOR/CEILING OUTLET
- SPEAKER/STROBE
- GLASS BREAK DETECTOR
- CEIL MTD MOTION DETECTOR
- WALL MTD MOTION DETECTOR
- CEIL MTD SECURITY SPEAKER
- WALL MTD SECURITY SPEAKER
- CEIL MTD AV SPEAKER
- WALL MTD AV SPEAKER
- SECURITY CAMERA
- CLG MTD SMOKE/HEAT DETECTOR
- CLG MTD EXIT
- WALL MTD EXIT
- CLG MTD SPRINKLER HEAD
- WALL MTD SPRINKLER HEAD
- RETURN OUTLET CLG DIFFUSER
- SUPPLY OUTLET CLG DIFFUSER
- LD LINEAR SUPPLY DIFFUSER
- WIRELESS ALARM ANTENNA/ TRANSMITTER
- TELEVISION OUTLET

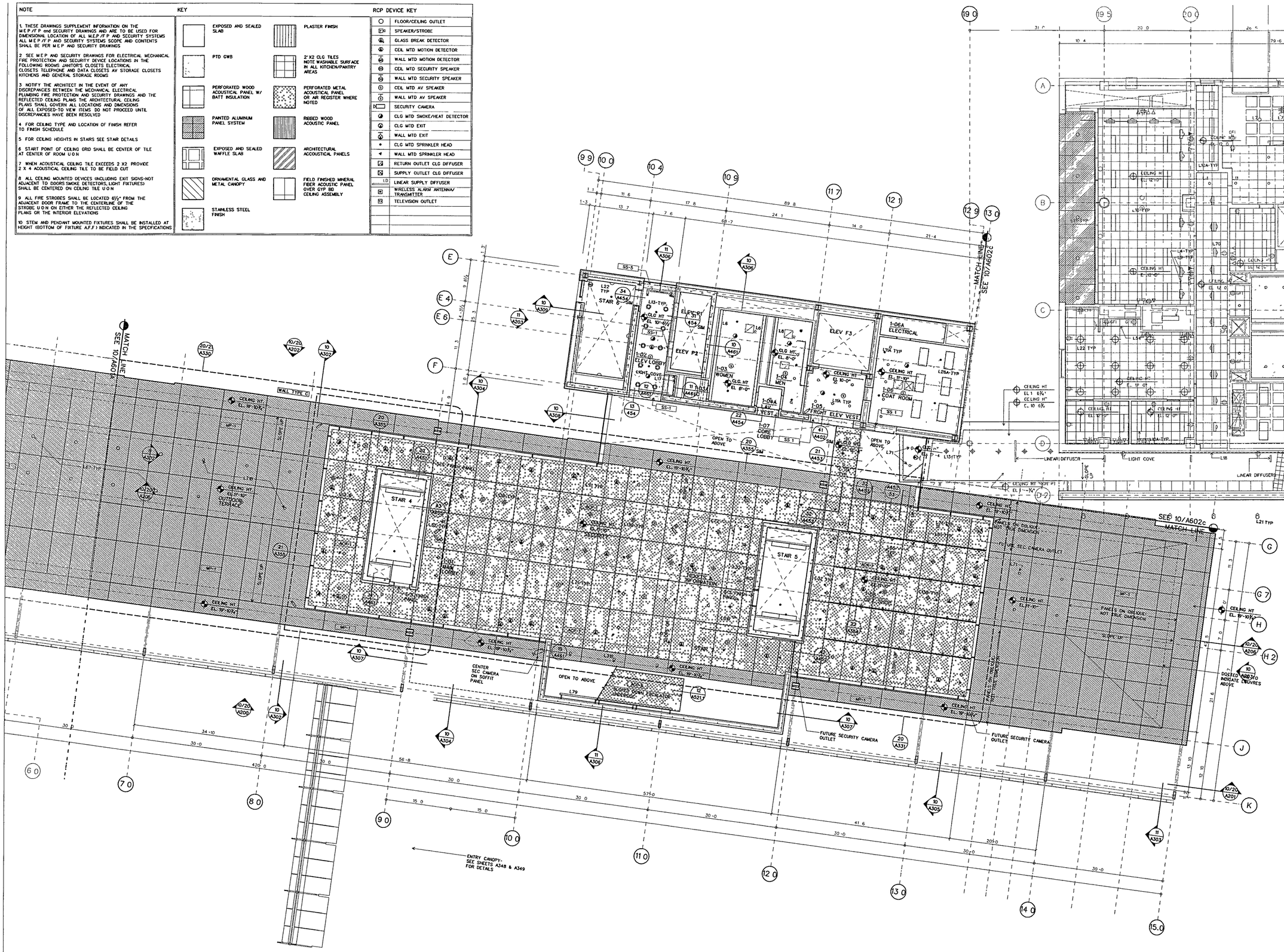

GROUND LEVEL REFLECTED CEILING PLAN B

SCALE 1/8 = 1'-0'

RCP-01 DGN 10

WILLIAM J CLINTON PRESIDENTIAL CENTER

LITTLE ROCK, ARKANSAS

Architect

POLSHEK PARTNERSHIP LLP
320 West 13th Street
New York New York 10014
212.807 7171

Coordinating Architects

POLK STANLEY YEARY ARCHITECTS Ltd
700 South Schiller Street
Little Rock, Arkansas 72201
501 378 0878

WITSELL EVANS RASCO
901 West Third Street
Little Rock, Arkansas 72201
501 374 5300

WOODS CARADINE ARCHITECTS
2200 South Main Street
Little Rock, Arkansas 72206
501 374 4060

Landscape Architects

HARGREAVES ASSOCIATES
118 Magazine Street
Cambridge Massachusettes 02139
617 661 0070

LANDSCAPE ARCHITECTURE, Inc.
2300 Cottondale Lane Suite 202
Little Rock, Arkansas 72202
501 374 5610

Structural Engineer

LESLIE E ROBERTSON ASSOC , RLLP
30 Broad Street, 47th Floor
New York New York 10004
212.750 9000

MEP Engineers

FLACK + KURTZ Inc.
475 Fifth Avenue
New York, New York 10017
212 532 9600

CROMWELL ARCHITECTS ENGINEERS
101 South Spring Street
Little Rock, Arkansas 72201
501 372 2900

Curtainwall Consultant

R. A. HEINTGES ARCHITECTS
126 Fifth Avenue 9th Floor
New York, New York 10011
212.652-2966

Seal

RICHARD OLCOTT REGISTERED ARCHITECT 3405 ARKANSAS

Issue	Date
100% Construction Documents	09/27/02
90% Progress Printing	08/30/02
100% Struct./ CD Progress	07/01/02
Bridge Bldg Substructure	06/14/02
100% Steel & Concrete CD & Architectural CD Progress	05/15/02
100% Design Development	03/01/02

Job No 9908

Scale 1/8" = 1-0"

Date September 27 2002

Title GROUND LEVEL PARTIAL REFLECTED CEILING PLAN

Sheet No A601b

FOR OFFICIAL USE ONLY

NOTE

1 THESE DRAWINGS SUPPLEMENT INFORMATION ON THE M.E.P./F.P. and SECURITY DRAWINGS AND ARE TO BE USED FOR DIMENSIONAL LOCATION OF ALL M.E.P./F.P. AND SECURITY SYSTEMS ALL M.E.P./F.P. AND SECURITY SYSTEMS SCOPE AND CONTENTS SHALL BE PER M.E.P. AND SECURITY DRAWINGS

2 SEE M.E.P. AND SECURITY DRAWINGS FOR ELECTRICAL MECHANICAL FIRE PROTECTION AND SECURITY DEVICE LOCATIONS IN THE FOLLOWING ROOMS JANITOR'S CLOSETS ELECTRICAL CLOSETS TELEPHONE AND DATA CLOSETS AV STORAGE CLOSETS KITCHENS AND GENERAL STORAGE ROOMS.

3 NOTIFY THE ARCHITECT IN THE EVENT OF ANY DISCREPANCIES BETWEEN THE MECHANICAL ELECTRICAL PLUMBING FIRE PROTECTION AND SECURITY DRAWINGS AND THE REFLECTED CEILING PLANS THE ARCHITECTURAL CEILING PLANS SHALL GOVERN ALL LOCATIONS AND DIMENSIONS OF ALL EXPOSED TO VIEW ITEMS DO NOT PROCEED UNTIL DISCREPANCIES HAVE BEEN RESOLVED

4 FOR CEILING TYPE AND LOCATION OF FINISH, REFER TO FINISH SCHEDULE

5 FOR CEILING HEIGHTS IN STAIRS, SEE STAIR DETAILS

6 START POINT OF CEILING GRID SHALL BE CENTER OF TILE AT CENTER OF ROOM U.O.N

7 WHEN ACOUSTICAL CEILING TILE EXCEEDS 2 X2' PROVIDE 2 X ½ ACOUSTICAL CEILING TILE TO BE FIELD CUT

8 ALL CEILING MOUNTED DEVICES (INCLUDING EXIT SIGNS NOT ADJACENT TO DOORS,SMOKE DETECTORS LIGHT FIXTURES) SHALL BE CENTERED ON CEILING TILE U.O.N

9 ALL FIRE STROBES SHALL BE LOCATED 6½" FROM THE ADJACENT DOOR FRAME TO THE CENTERLINE OF THE STROBE 10.0 ft. ON EITHER THE REFLECTED CEILING PLANS OR THE INTERIOR ELEVATIONS.

10 STEM AND PENDANT MOUNTED FIXTURES SHALL BE INSTALLED AT HEIGHT (BOTTOM OF FIXTURE A.F.F.) INDICATED IN THE SPECIFICATIONS

KEY

EXPOSED AND SEALED SLAB	PLASTER FINISH
PTD GWB	2'X2' CLG TILES NOTE-WASHABLE SURFACE IN ALL KITCHEN/PANTRY AREAS
PERFORATED WOOD ACOUSTICAL PANEL W/ BATT INSULATION	PERFORATED METAL ACOUSTICAL PANEL ON AIR REGISTER WHERE NOTED
PAINTED ALUMINUM PANEL SYSTEM	RIBBED WOOD ACOUSTIC PANEL
EXPOSED AND SEALED WAFFLE SLAB	ARCHITECTURAL ACCOUSTICAL PANELS
ORNAMENTAL GLASS AND METAL CANOPY	FIELD FINISHED MINERAL FIBER ACOUSTIC PANEL OVER GYP BD. CEILING ASSEMBLY
STAINLESS STEEL FINISH	

RCP DEVICE KEY

	FLOOR/CEILING OUTLET
	SPEAKER/STROBE
	GLASS BREAK DETECTOR
	CEIL MTD. MOTION DETECTOR
	WALL MTD MOTION DETECTOR
	CEIL MTD SECURITY SPEAKER
	WALL MTD SECURITY SPEAKER
	CEIL MTD AV SPEAKER
	WALL MTD AV SPEAKER
	SECURITY CAMERA
	CLG. MTD SMOKE/HEAT DETECTOR
	CLG MTD EXIT
	WALL MTD EXIT
	CLG MTD SPRINKLER HEAD
	WALL MTD SPRINKLER HEAD
	RETURN OUTLET CLG DIFFUSER
	SUPPLY OUTLET CLG DIFFUSER
LD	LINEAR SUPPLY DIFFUSER
	WIRELESS ALARM ANTENNA/ TRANSMITTER
	TELEVISION OUTLET
	CIRCULAR DIFFUSER

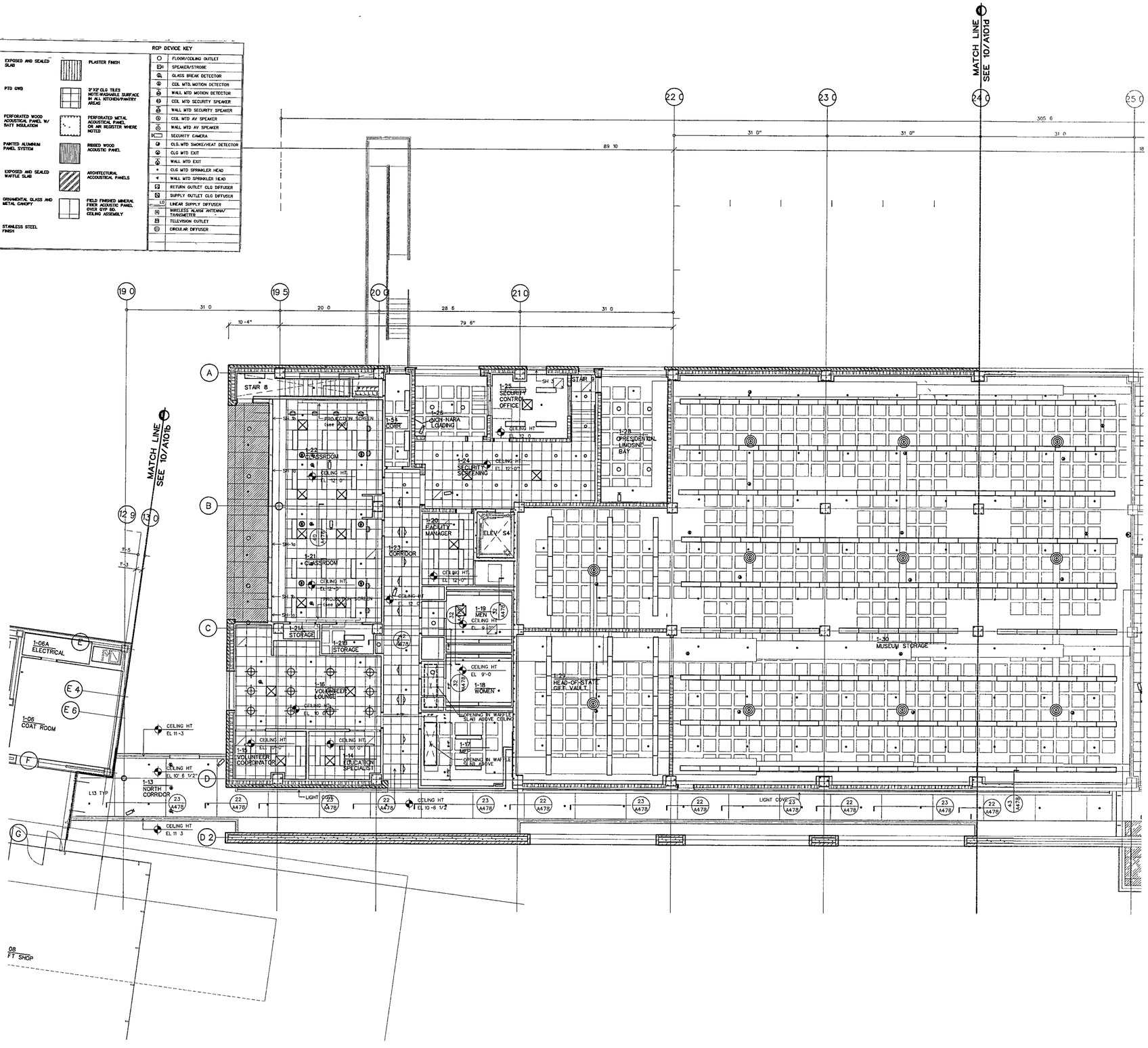

GROUND FLOOR PARTIAL REFLECTED CEILING PLAN C

SCALE 1/8" = 1'-0"

RCP-01 dwg

10

WILLIAM J CLINTON PRESIDENTIAL CENTER

LITTLE ROCK, ARKANSAS

Architect

POLSHEK PARTNERSHIP LLP
320 West 13th Street
New York, New York 10014
212.807 7171

Coordinating Architects

POLK STANLEY YEARY ARCHITECTS Ltd
700 South Schiller Street
Little Rock, Arkansas 72201
501 378 0878

WITSELL EVANS RASCO
901 West Third Street
Little Rock, Arkansas 72201
501 374 5300

WOODS CARADINE ARCHITECTS
2200 South Main Street
Little Rock, Arkansas 72206
501 374 4060

Landscape Architects

HARGREAVES ASSOCIATES
118 Magazine Street
Cambridge, Massachusettes 02139
617 661 0070

LANDSCAPE ARCHITECTURE Inc
2300 Cottondale Lane Suite 202
Little Rock Arkansas 72202
501 374 5610

Structural Engineer

LESLIE E ROBERTSON ASSOC , RLLP
30 Broad Street 47th Floor
New York, New York 10004
212 750 9000

MEP Engineers

FLACK + KURTZ Inc
475 Fifth Avenue
New York New York 10017
212 532 9600

CROMWELL ARCHITECTS ENGINEERS
101 South Spring Street
Little Rock, Arkansas 72201
501 372 2900

Curtainwall Consultant

R. A. HEINTGES ARCHITECTS
126 Fifth Avenue 9th Floor
New York, New York 10011
212 652-2966

Seal

WITSELL EVANS & RASCO P.A. REGISTERED ARCHITECTS 9-27-02 NO C-44 ARKANSAS

Issue	Date
100% Construction Documents	09/27/02
90% Progress Printing	08/30/02
100% Struct./CD Progress	07/01/02
Bridge Bldg Substructure	06/14/02
100% Steel & Concrete CD & Architectural CD Progress	05/15/02
100% Design Development	03/01/02

Job No 9908

Scale 1/8" = 1'-0"

Date September 27, 2002

Title GROUND LEVEL PARTIAL REFLECTED CEILING PLAN

Sheet No A601c

FOR OFFICIAL USE ONLY

NOTE

1. THESE DRAWINGS SUPPLEMENT INFORMATION ON THE M E P /F/P and SECURITY DRAWINGS AND ARE TO BE USED FOR DIMENSIONAL LOCATION OF ALL M E P /F/P AND SECURITY SYSTEMS ALL M E P /F/ P AND SECURITY SYSTEMS SCOPE AND CONTENTS SHALL BE PER M E P AND SECURITY DRAWINGS
2. SEE M E P AND SECURITY DRAWINGS FOR ELECTRICAL MECHANICAL FIRE PROTECTION AND SECURITY DEVICE LOCATIONS IN THE FOLLOWING ROOMS JANITOR'S CLOSETS ELECTRICAL CLOSETS TELEPHONE AND DATA CLOSETS AV STORAGE CLOSETS KITCHENS AND GENERAL STORAGE ROOMS
3. NOTIFY THE ARCHITECT IN THE EVENT OF ANY DISCREPANCIES BETWEEN THE MECHANICAL ELECTRICAL PLUMBING FIRE PROTECTION, AND SECURITY DRAWINGS AND THE REFLECTED CEILING PLANS THE ARCHITECTURAL CEILING PLANS SHALL GOVERN ALL LOCATIONS AND DIMENSIONS OF ALL EXPOSED TO VIEW ITEMS DO NOT PROCEED UNTIL DISCREPANCIES HAVE BEEN RESOLVED
4. FOR CEILING TYPE AND LOCATION OF FINISH, REFER TO FINISH SCHEDULE
5. FOR CEILING HEIGHTS IN STAIRS SEE STAIR DETAILS
6. START POINT OF CEILING GRID SHALL BE CENTER OF TILE AT CENTER OF ROOM U O N
7. WHEN ACOUSTICAL CEILING TILE EXCEEDS 2 X2 PROVIDE 2 X 4 ACOUSTICAL CEILING TILE TO BE FIELD CUT
8. ALL CEILING MOUNTED DEVICES (INCLUDING EXIT SIGNS NOT ADJACENT TO DOORS SMOKE DETECTORS LIGHT FIXTURES) SHALL BE CENTERED ON CEILING TILE U O N
9. ALL FIRE STROBES SHALL BE LOCATED 8½' FROM THE ADJACENT DOOR FRAME TO THE CENTERLINE OF THE STROBE U O N, ON EITHER THE REFLECTED CEILING PLANS OR THE INTERIOR ELEVATIONS
10. STEM AND PENDANT MOUNTED FIXTURES SHALL BE INSTALLED AT HEIGHT (BOTTOM OF FIXTURE A.F.F.) INDICATED IN THE SPECIFICATIONS

KEY

- EXPOSED AND SEALED SLAB
- PLASTER FINISH
- PTD. GWB
- 2'X2' CLG TILES NOTE: WASHABLE SURFACE IN ALL KITCHEN/PANTRY AREAS
- PERFORATED WOOD ACOUSTICAL PANEL W/ BATT INSULATION
- PERFORATED METAL ACOUSTICAL PANEL ON AIR REGISTER WHERE NOTED
- PAINTED ALUMINUM PANEL SYSTEM
- RIBBED WOOD ACOUSTIC PANEL
- EXPOSED AND SEALED WAFFLE SLAB
- ARCHITECTURAL ACOUSTICAL PANELS
- ORNAMENTAL GLASS AND METAL CANOPY
- FIELD FINISHED MINERAL FIBER ACOUSTIC PANEL OVER GYP BD. CEILING ASSEMBLY
- STAINLESS STEEL FINISH

RCP DEVICE KEY

- FLOOR/CEILING OUTLET
- SPEAKER/STROBE
- GLASS BREAK DETECTOR
- CEIL MTD MOTION DETECTOR
- WALL MTD MOTION DETECTOR
- CEIL MTD SECURITY SPEAKER
- WALL MTD SECURITY SPEAKER
- CEIL. MTD AV SPEAKER
- WALL MTD AV SPEAKER
- SECURITY CAMERA
- CLG MTD SMOKE/HEAT DETECTOR
- CLG MTD EXIT
- WALL MTD EXIT
- CLG MTD SPRINKLER HEAD
- WALL MTD SPRINKLER HEAD
- RETURN OUTLET CLG DIFFUSER
- SUPPLY OUTLET CLG DIFFUSER
- LINEAR SUPPLY DIFFUSER
- WIRELESS ALARM ANTENNA/ TRANSMITTER
- TELEVISION OUTLET
- CIRCULAR DIFFUSER

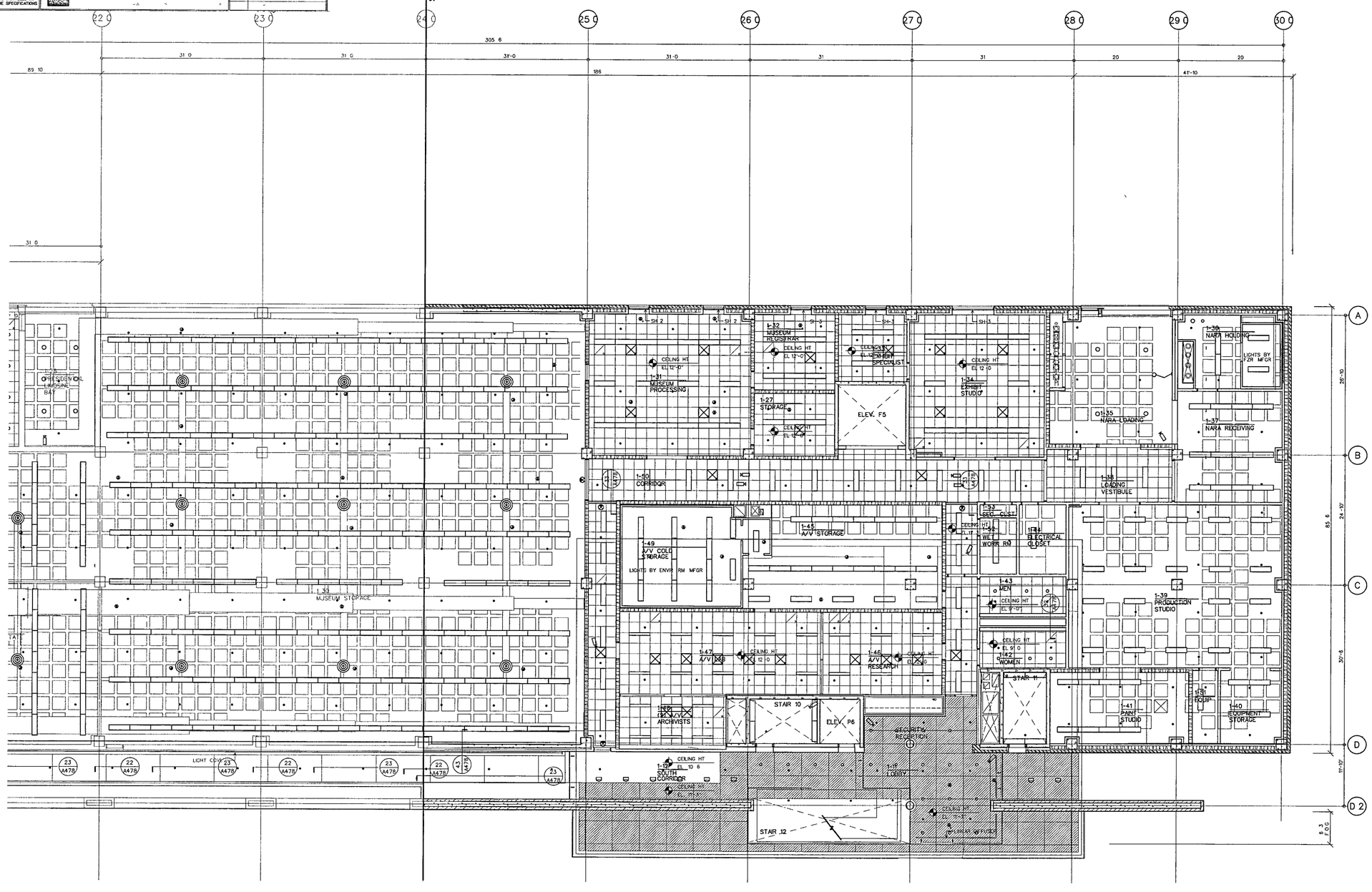

GROUND LEVEL PARTIAL REFLECTED CEILING PLAN D

SCALE 1/8" = 1'-0"

AFP-001 dwg

10

WILLIAM J CLINTON PRESIDENTIAL CENTER

LITTLE ROCK ARKANSAS

Architect

POLSHEK PARTNERSHIP LLP
320 West 13th Street
New York, New York 10014
212 807 7171

Coordinating Architects

POLK STANLEY YEARY ARCHITECTS Ltd
700 South Schiller Street
Little Rock, Arkansas 72201
501 378 0878

WITSELL EVANS RASCO
901 West Third Street
Little Rock, Arkansas 72201
501 374 5300

WOODS CARADINE ARCHITECTS
2200 South Main Street
Little Rock, Arkansas 72206
501 374 4060

Landscape Architects

HARGREAVES ASSOCIATES
118 Magazine Street
Cambridge Massachusettes 02139
617 661 0070

LANDSCAPE ARCHITECTURE Inc.
2300 Cottondale Lane Suite 202
Little Rock, Arkansas 72202
501 374 5610

Structural Engineer

LESLIE E ROBERTSON ASSOC , RLLP
30 Broad Street 47th Floor
New York, New York 10004
212 750 9000

MEP Engineers

FLACK + KURTZ Inc
475 Fifth Avenue
New York, New York 10017
212 532 9600

CROMWELL ARCHITECTS ENGINEERS
101 South Spring Street
Little Rock Arkansas 72201
501 372.2900

Curtainwall Consultant

R A. HEINTGES ARCHITECTS
126 Fifth Avenue 9th Floor
New York, New York 10011
212 652 2966

Seal

WITSELL, EVANS, & RASCO, P.A. REGISTERED ARCHITECTS NO C44 ARKANSAS

Issue	Date
100% Construction Documents	09/27/02
90% Progress Printing	08/30/02
100% Struct./CD Progress	07/01/02
Bridge Bldg Substructure	06/14/02
100% Steel & Concrete CD & Architectural CD Progress	05/15/02
100% Design Development	03/01/02

Job No 9908

Scale 1/8" = 1'-0"

Date September 27 2002

Title GROUND LEVEL PARTIAL REFLECTED CEILING PLAN

Sheet No A601d

FOR OFFICIAL USE ONLY

NOTE	KEY		RCP DEVICE KEY
1 THESE DRAWINGS SUPPLEMENT INFORMATION ON THE M E P/F.P and SECURITY DRAWINGS AND ARE TO BE USED FOR DIMENSIONAL LOCATION OF ALL M E P/F P AND SECURITY SYSTEMS ALL M E P/F P AND SECURITY SYSTEMS SCOPE AND CONTENTS SHALL BE PER M E P AND SECURITY DRAWINGS	EXPOSED AND SEALED SLAB	PLASTER FINISH	FLOOR/CEILING OUTLET
2 SEE M E P AND SECURITY DRAWINGS FOR ELECTRICAL MECHANICAL FIRE PROTECTION AND SECURITY DEVICE LOCATIONS IN THE FOLLOWING ROOMS: JANITOR'S CLOSETS ELECTRICAL CLOSETS TELEPHONE AND DATA CLOSETS AV STORAGE CLOSETS KITCHENS AND GENERAL STORAGE ROOMS	PTD GWB	2 X2 CLG TILES NOTE WASHABLE SURFACE IN ALL KITCHEN/PANTRY AREAS	SPEAKER/STROBE
3 NOTIFY THE ARCHITECT IN THE EVENT OF ANY DISCREPANCIES BETWEEN THE MECHANICAL ELECTRICAL PLUMBING FIRE PROTECTION AND SECURITY DRAWINGS AND THE REFLECTED CEILING PLANS THE ARCHITECTURAL CEILING PLANS SHALL GOVERN ALL LOCATIONS AND DIMENSIONS OF ALL EXPOSED-TO-VIEW ITEMS DO NOT PROCEED UNTIL DISCREPANCIES HAVE BEEN RESOLVED	PERFORATED WOOD ACOUSTICAL PANEL W/ BATT INSULATION	PERFORATED METAL ACOUSTICAL PANEL OR AIR REGISTER WHERE NOTED	GLASS BREAK DETECTOR
4 FOR CEILING TYPE AND LOCATION OF FINISH REFER TO FINISH SCHEDULE	PAINTED ALUMINUM PANEL SYSTEM	RIBBED WOOD ACOUSTIC PANEL	CEIL MTD MOTION DETECTOR
5 FOR CEILING HEIGHTS IN STAIRS SEE STAIR DETAILS	EXPOSED AND SEALED WAFFLE SLAB	ARCHITECTURAL ACCOUSTICAL PANELS	WALL MTD MOTION DETECTOR
6 START POINT OF CEILING GRID SHALL BE CENTER OF TILE AT CENTER OF ROOM U O N	ORNAMENTAL GLASS AND METAL CANOPY	FIELD FINISHED MINERAL FIBER ACOUSTIC PANEL OVER GYP BD CEILING ASSEMBLY	CEIL MTD SECURITY SPEAKER
7 WHEN ACOUSTICAL CEILING TILE EXCEEDS 2 X2 PROVIDE 2 X 4 ACOUSTICAL CEILING TILE TO BE FIELD CUT	STAINLESS STEEL FINISH		WALL MTD SECURITY SPEAKER
8 ALL CEILING MOUNTED DEVICES (INCLUDING EXIT SIGNS-NOT ADJACENT TO DOORS SMOKE DETECTORS LIGHT FIXTURES) SHALL BE CENTERED ON CEILING T&L U O N			CEIL MTD AV SPEAKER
9 ALL FIRE STROBES SHALL BE LOCATED 6½" FROM THE ADJACENT DOOR FRAME TO THE CENTERLINE OF THE STROBE U O N ON EITHER THE REFLECTED CEILING PLANS OR THE INTERIOR ELEVATIONS			WALL MTD AV SPEAKER
10 STEM AND PENDANT MOUNTED FIXTURES SHALL BE INSTALLED AT HEIGHT (BOTTOM OF FIXTURE A F F) INDICATED IN THE SPECIFICATIONS			SECURITY CAMERA
			CLG MTD SMOKE/HEAT DETECTOR
			CLG. MTD EXIT
			WALL MTD EXIT
			CLG MTD SPRINKLER HEAD
			WALL MTD SPRINKLER HEAD
			RETURN OUTLET CLG DIFFUSER
			SUPPLY OUTLET CLG DIFFUSER
			LINEAR SUPPLY DIFFUSER
			WIRELESS ALARM ANTENNA/ TRANSMITTER
			TELEVISION OUTLET

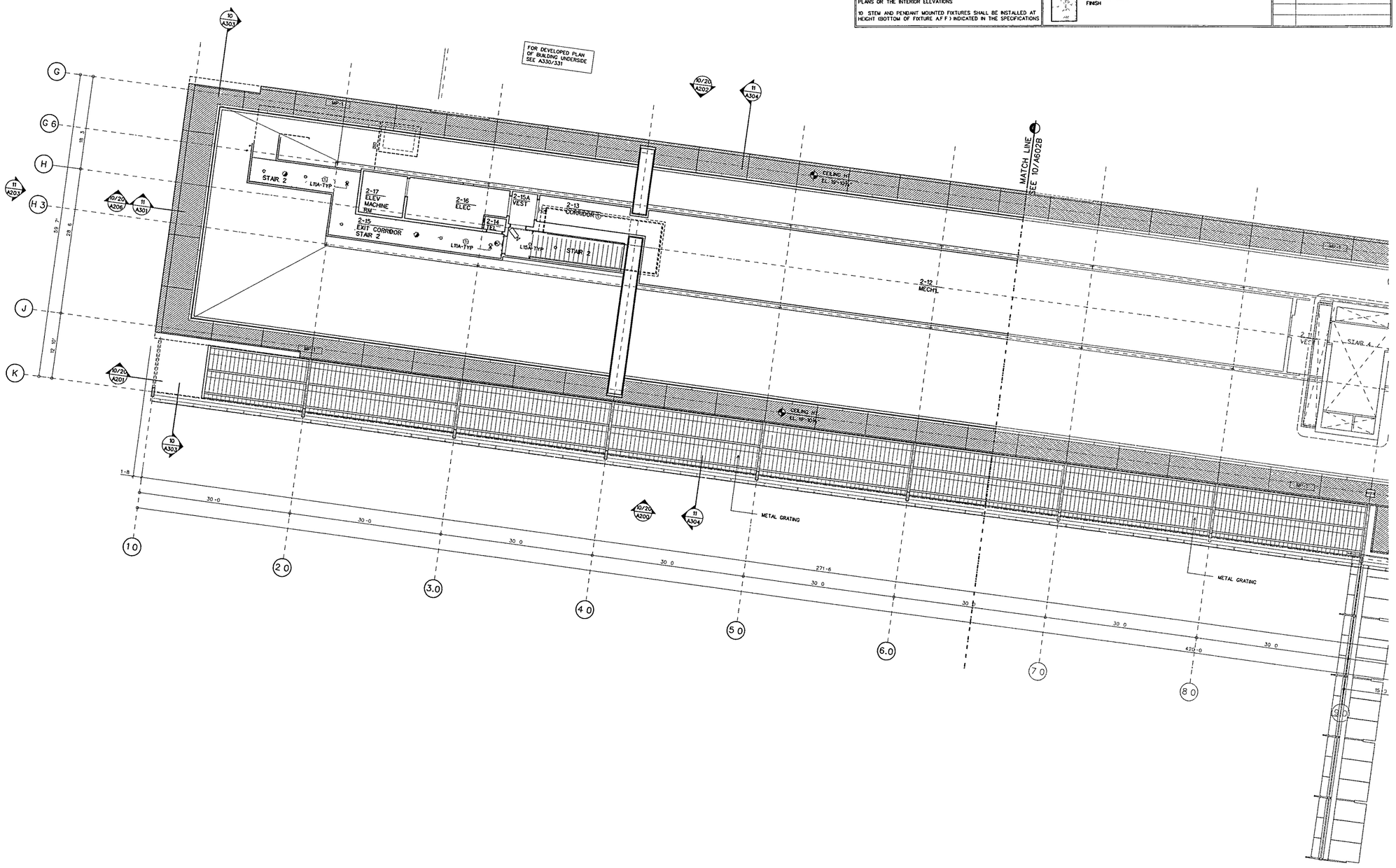

SECOND LEVEL REFLECTED CEILING PLAN A

SCALE 1/8" = 1'-0"

RCP-02 DGN 10

WILLIAM J CLINTON PRESIDENTIAL CENTER

LITTLE ROCK, ARKANSAS

Architect

POLSHEK PARTNERSHIP LLP
320 West 13th Street
New York, New York 10014
212.807 7171

Coordinating Architects

POLK STANLEY YEARY ARCHITECTS Ltd
700 South Schiller Street
Little Rock, Arkansas 72201
501 378 0878

WITSELL EVANS RASCO
901 West Third Street
Little Rock Arkansas 72201
501 374 5300

WOODS CARADINE ARCHITECTS
2200 South Main Street
Little Rock, Arkansas 72206
501 374 4060

Landscape Architects

HARGREAVES ASSOCIATES
118 Magazine Street
Cambridge Massachusettes 02139
617 661 0070

LANDSCAPE ARCHITECTURE, Inc.
2300 Cottondale Lane Suite 202
Little Rock, Arkansas 72202
501 374 5610

Structural Engineer

LESLIE E. ROBERTSON ASSOC , RLLP
30 Broad Street, 47th Floor
New York, New York 10004
212 750 9000

MEP Engineers

FLACK + KURTZ Inc.
475 Fifth Avenue
New York, New York 10017
212.532 9600

CROMWELL ARCHITECTS ENGINEERS
101 South Spring Street
Little Rock, Arkansas 72201
501 372.2900

Curtainwall Consultant

R. A HEINTGES ARCHITECTS
126 Fifth Avenue 9th Floor
New York, New York 10011
212 652-2966

Seal

Issue	Date
100% Construction Documents	09/27/02
90% Progress Printing	08/30/02
100% Struct./ CD Progress	07/01/02
100% Steel & Concrete CD & Architectural CD Progress	05/15/02
100% Design Development	03/01/02

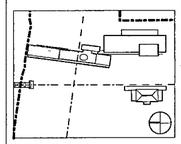

Job No 9908

Scale 1/8" = 1'-0"

Date September 27, 2002

Title

SECOND LEVEL PARTIAL REFLECTED CEILING PLAN

Sheet No

A602a

FOR OFFICIAL USE ONLY

NOTE	KEY		RCP DEVICE KEY
1 THESE DRAWINGS SUPPLEMENT INFORMATION ON THE M E P /F P and SECURITY DRAWINGS AND ARE TO BE USED FOR DIMENSIONAL LOCATION OF ALL M E P /F P AND SECURITY SYSTEMS ALL M E P /F P AND SECURITY SYSTEMS SCOPE AND CONTENTS SHALL BE PER M E P AND SECURITY DRAWINGS	EXPOSED AND SEALED SLAB	PLASTER FINISH	FLOOR/CEILING OUTLET
2 SEE M E P AND SECURITY DRAWINGS FOR ELECTRICAL MECHANICAL FIRE PROTECTION AND SECURITY DEVICE LOCATIONS IN THE FOLLOWING ROOMS JANITOR'S CLOSETS ELECTRICAL CLOSETS TELEPHONE AND DATA CLOSETS AV STORAGE CLOSETS KITCHENS AND GENERAL STORAGE ROOMS.	PTD GWB	2 X2 CLG TILES NOTE WASHABLE SURFACE IN ALL KITCHEN/PANTRY AREAS	SPEAKER/STROBE
3 NOTIFY THE ARCHITECT IN THE EVENT OF ANY DISCREPANCIES BETWEEN THE MECHANICAL ELECTRICAL PLUMBING FIRE PROTECTION, AND SECURITY DRAWINGS AND THE REFLECTED CEILING PLANS THE ARCHITECTURAL CEILING PLANS SHALL COVERN ALL LOCATIONS AND DIMENSIONS OF ALL EXPOSED-TO VIEW ITEMS DO NOT PROCEED UNTIL DISCREPANCIES HAVE BEEN RESOLVED	PERFORATED WOOD ACOUSTICAL PANEL W/ BATT INSULATION	PERFORATED METAL ACOUSTICAL PANEL OR AR REGISTER WHERE NOTED	GLASS BREAK DETECTOR
4 FOR CEILING TYPE AND LOCATION OF FINISH REFER TO FINISH SCHEDULE	PAINTED ALUMINUM PANEL SYSTEM	RIBBED WOOD ACOUSTIC PANEL	CEIL MTD MOTION DETECTOR
5 FOR CEILING HEIGHTS IN STAIRS, SEE STAIR DETAILS	EXPOSED AND SEALED WAFFLE SLAB	ARCHITECTURAL ACCOUSTICAL PANELS	WALL MTD MOTION DETECTOR
6 START POINT OF CEILING GRID SHALL BE CENTER OF TILE AT CENTER OF ROOM U O N	ORNAMENTAL GLASS AND METAL CANOPY	FIELD FINISHED MINERAL FIBER ACOUSTIC PANEL OVER GYP BD CEILING ASSEMBLY	CEIL MTD SECURITY SPEAKER
7 WHEN ACOUSTICAL CEILING TILE EXCEEDS 2 X2 PROVIDE 2 X 4 ACOUSTICAL CEILING TILE TO BE FIELD CUT	STAINLESS STEEL FINISH		WALL MTD SECURITY SPEAKER
8 ALL CEILING MOUNTED DEVICES (INCLUDING EXIT SIGNS NOT ADJACENT TO DOORS,SMOKE DETECTORS LIGHT FIXTURES) SHALL BE CENTERED ON CEILING TILE U O N.			CEIL MTD AV SPEAKER
9 ALL FIRE STROBES SHALL BE LOCATED 6½ FROM THE ADJACENT DOOR FRAME TO THE CENTERLINE OF THE STROBE U O N ON EITHER THE REFLECTED CEILING PLANS OR THE INTERIOR ELEVATIONS			WALL MTD AV SPEAKER
10 STEM AND PENDANT MOUNTED FIXTURES SHALL BE INSTALLED AT HEIGHT (BOTTOM OF FIXTURE AF F) INDICATED IN THE SPECIFICATIONS			SECURITY CAMERA
			CLG MTD SMOKE/HEAT DETECTOR
			CLG MTD EXIT
			WALL MTD EXIT
			CLG MTD SPRINKLER HEAD
			WALL MTD SPRINKLER HEAD
			RETURN OUTLET CLG DIFFUSER
			SUPPLY OUTLET CLG. DIFFUSER
			LINEAR SUPPLY DIFFUSER
			WIRELESS ALARM ANTENNA/ TRANSMITTER
			TELEVISION OUTLET

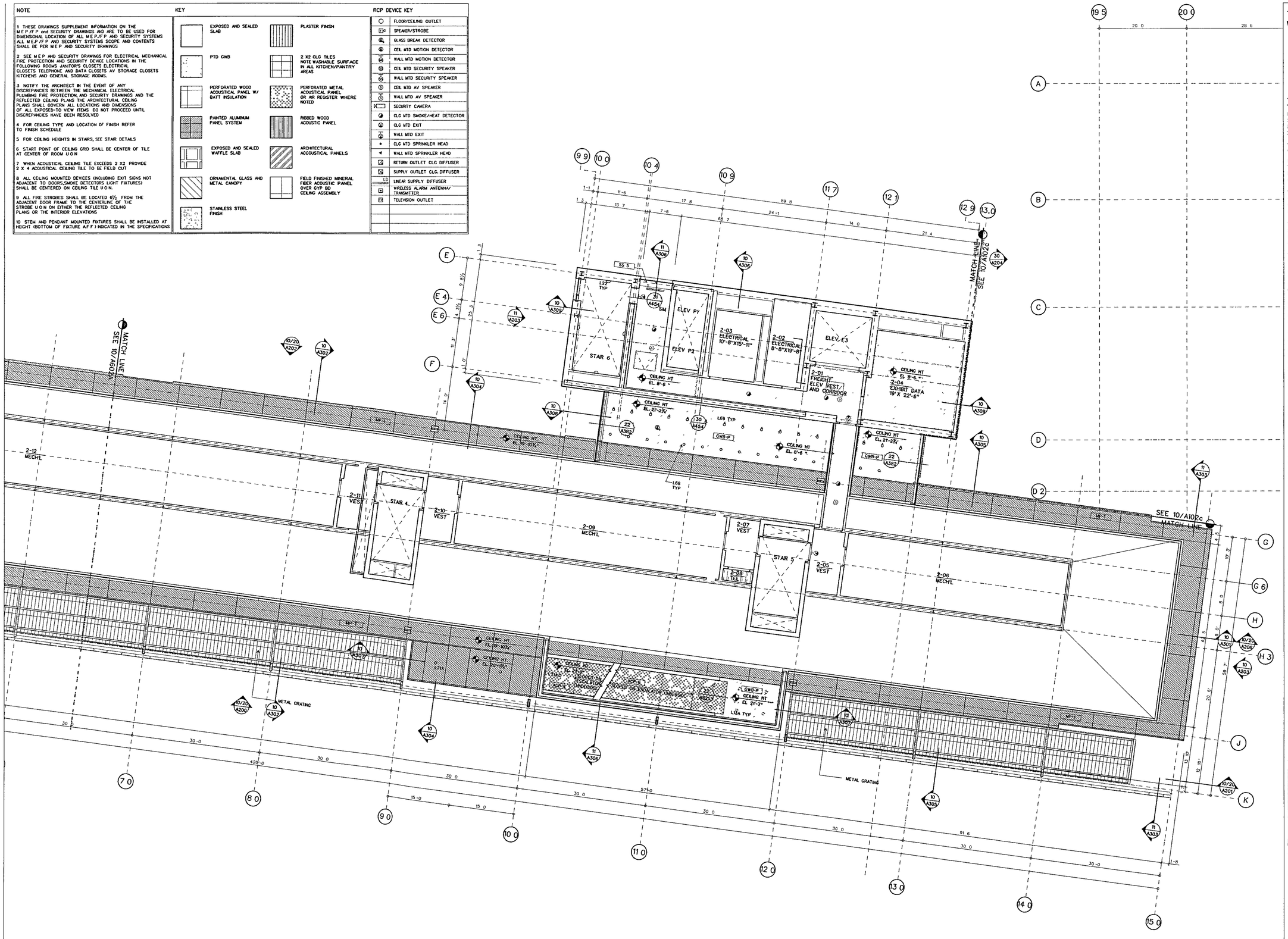

SECOND LEVEL REFLECTED CEILING PLAN B

SCALE 1/8" = 1'-0"

RCP-02 DGN

10

WILLIAM J CLINTON PRESIDENTIAL CENTER

LITTLE ROCK, ARKANSAS

Architect

POLSHEK PARTNERSHIP LLP
320 West 13th Street
New York, New York 10014
212 807 7171

Coordinating Architects

POLK STANLEY YEARY ARCHITECTS Ltd
700 South Schiller Street
Little Rock, Arkansas 72201
501 378 0878

WITSELL EVANS RASCO
901 West Third Street
Little Rock Arkansas 72201
501 374 5300

WOODS CARADINE ARCHITECTS
2200 South Main Street
Little Rock, Arkansas 72206
501 374 4060

Landscape Architects

HARGREAVES ASSOCIATES
118 Magazine Street
Cambridge Massachusettes 02139
617 661 0070

LANDSCAPE ARCHITECTURE, Inc.
2300 Cottondale Lane Suite 202
Little Rock, Arkansas 72202
501 374 5610

Structural Engineer

LESLIE E. ROBERTSON ASSOC , RLLP
30 Broad Street, 47th Floor
New York New York 10004
212 750 9000

MEP Engineers

FLACK + KURTZ Inc.
475 Fifth Avenue
New York, New York 10017
212 532 9600

CROMWELL ARCHITECTS ENGINEERS
101 South Spring Street
Little Rock Arkansas 72201
501 372 2900

Curtainwall Consultant

R. A HEINTGES ARCHITECTS
126 Fifth Avenue 5th Floor
New York, New York 10011
212 652-2966

Seal

RICHARD OLCOTT REGISTERED ARCHITECT 3405 ARKANSAS

Issue	Date
100% Construction Documents	09/27/02
90% Progress Printing	08/30/02
100% Struct./ CD Progress	07/01/02
100% Steel & Concrete CD & Architectural CD Progress	05/15/02
100% Design Development	03/01/02

Job No 9908

Scale 1/8" = 1'-0"

Date September 27 2002

Title

SECOND LEVEL PARTIAL REFLECTED CEILING PLAN

Sheet No

A602b

FOR OFFICIAL USE ONLY

NOTE

1 THESE DRAWINGS SUPPLEMENT INFORMATION ON THE M E P /F P and SECURITY DRAWINGS AND ARE TO BE USED FOR DIMENSIONAL LOCATION OF ALL M E P /F P AND SECURITY SYSTEMS ALL M E P /F P AND SECURITY SYSTEMS SCOPE AND CONTENTS SHALL BE PER M E P AND SECURITY DRAWINGS

2 SEE M E P AND SECURITY DRAWINGS FOR ELECTRICAL MECHANICAL FIRE PROTECTION AND SECURITY DEVICE LOCATIONS IN THE FOLLOWING ROOMS JANITORS CLOSETS, ELECTRICAL CLOSETS TELEPHONE AND DATA CLOSETS, AV STORAGE CLOSETS KITCHENS AND GENERAL STORAGE ROOMS

3 NOTIFY THE ARCHITECT IN THE EVENT OF ANY DISCREPANCIES BETWEEN THE MECHANICAL ELECTRICAL PLUMBING FIRE PROTECTION, AND SECURITY DRAWINGS AND THE REFLECTED CEILING PLANS THE ARCHITECTURAL CEILING PLANS SHALL GOVERN ALL LOCATIONS AND DIMENSIONS OF ALL EXPOSED-TO VIEW ITEMS DO NOT PROCEED UNTIL DISCREPANCIES HAVE BEEN RESOLVED

4 FOR CEILING TYPE AND LOCATION OF FINISH, REFER TO FINISH SCHEDULE

5 FOR CEILING HEIGHTS IN STAIRS SEE STAIR DETAILS

6 START POINT OF CEILING GRID SHALL BE CENTER OF TILE AT CENTER OF ROOM U O.N.

7 WHEN ACOUSTICAL CEILING TILE EXCEEDS 2 X2 PROVIDE 2 X 4 ACOUSTICAL CEILING TILE TO BE FIELD CUT

8 ALL CEILING MOUNTED DEVICES INCLUDING EXIT SIGNS NOT ADJACENT TO DOORS,SMOKE DETECTORS LIGHT FIXTURES) SHALL BE CENTERED ON CEILING TILE U.O.N.

9 ALL FIRE STROBES SHALL BE LOCATED 95/" FROM THE ADJACENT DOOR FRAME TO THE CENTERLINE OF THE STROBE U.O.N. ON EITHER THE REFLECTED CEILING PLANS OR THE INTERIOR ELEVATIONS

10 STEM AND PENDANT MOUNTED FIXTURES SHALL BE INSTALLED AT HEIGHT (BOTTOM OF FIXTURE A.F.F.) INDICATED IN THE SPECIFICATIONS

KEY

- EXPOSED AND SEALED SLAB
- PTD GWB
- PERFORATED WOOD ACOUSTICAL PANEL W/ BATT INSULATION
- PAINTED ALUMINUM PANEL SYSTEM
- EXPOSED AND SEALED WAFFLE SLAB
- ORNAMENTAL GLASS AND METAL CANOPY
- STAINLESS STEEL FINISH
- PLASTER FINISH
- 2' X2' CLG TILES NOTE:WASHABLE SURFACE IN ALL KITCHENS/PANTRY AREAS
- PERFORATED METAL ACOUSTICAL PANEL OR AIR REGISTER WHERE NOTED
- RIBBED WOOD ACOUSTIC PANEL
- ARCHITECTURAL ACOUSTICAL PANELS
- FIELD FINISHED MINERAL FIBER ACOUSTIC PANEL OVER DYP 9G. CEILING ASSEMBLY

RCP DEVICE KEY

- FLOOR/CEILING OUTLET
- SPEAKER/STROBE
- GLASS BREAK DETECTOR
- CEIL MTD MOTION DETECTOR
- WALL MTD MOTION DETECTOR
- CEIL MTD SECURITY SPEAKER
- WALL MTD SECURITY SPEAKER
- CEIL MTD AV SPEAKER
- WALL MTD AV SPEAKER
- SECURITY CAMERA
- CLG MTD SMOKE/HEAT DETECTOR
- CLG MTD EXIT
- WALL MTD EXIT
- CLG MTD SPRINKLER HEAD
- WALL MTD. SPRINKLER HEAD
- RETURN OUTLET CLG DIFFUSER
- SUPPLY OUTLET CLG DIFFUSER
- LINEAR SUPPLY DIFFUSER
- WIRELESS ALARM ANTENNA/ TRANSMITTER
- TELEVISION OUTLET
- CIRCULAR DIFFUSER

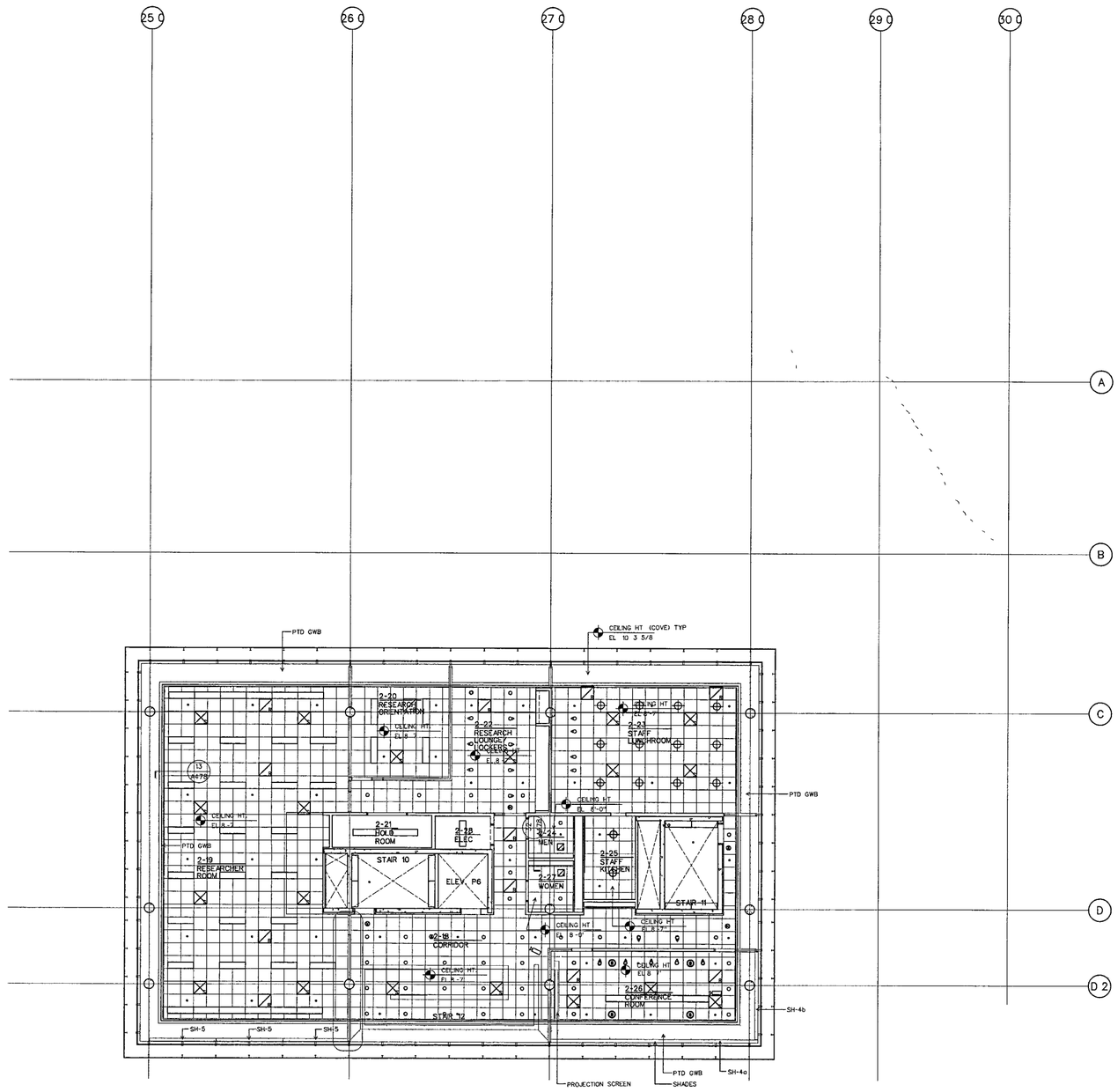

SECOND LEVEL REFLECTED CEILING PLAN D

SCALE 1/8" - 1'-0"

RCP-02 dwg

10

WILLIAM J CLINTON PRESIDENTIAL CENTER

LITTLE ROCK ARKANSAS

Architect

POLSHEK PARTNERSHIP LLP
320 West 13th Street
New York New York 10014
212 807 7171

Coordinating Architects

POLK STANLEY YEARY ARCHITECTS Ltd
700 South Schiller Street
Little Rock, Arkansas 72201
501 378 0878

WITSELL EVANS RASCO
901 West Third Street
Little Rock, Arkansas 72201
501 374 5300

WOODS CARADINE ARCHITECTS
2200 South Main Street
Little Rock, Arkansas 72206
501 374 4060

Landscape Architects

HARGREAVES ASSOCIATES
118 Magazine Street
Cambridge Massachusettes 02139
617 661 6070

LANDSCAPE ARCHITECTURE Inc
2300 Cottondale Lane Suite 202
Little Rock, Arkansas 72202
501 374 5610

Structural Engineer

LESLIE E ROBERTSON ASSOC , RLLP
30 Broad Street, 47th Floor
New York New York 10004
212 750 9000

MEP Engineers

FLACK + KURTZ Inc
475 Fifth Avenue
New York New York 10017
212 532 9600

CROMWELL ARCHITECTS ENGINEERS
101 South Spring Street
Little Rock Arkansas 72201
501 372 2900

Curtainwall Consultant

R A. HEINTGES ARCHITECTS
126 Fifth Avenue, 9th Floor
New York New York 10011
212 652 2966

Seal

WITSELL EVANS & RASCO P.A. REGISTERED ARCHITECTS 2-21-02 NO. C44 ARKANSAS

Issue	Date
100% Construction Documents	09/27/02
90% Progress Printing	08/30/02
100% Struct./CD Progress	07/01/02
Bridge Bldg Substructure	06/14/02
100% Steel & Concrete CD	05/15/02
& Architectural CD Progress	
100% Design Development	03/01/02

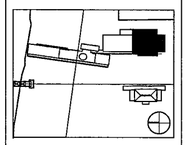

Job No 9908

Scale 1/8" = 1'-0"

Date September 27, 2002

Title

SECOND LEVEL REFLECTED CEILING PLAN

Sheet No

A602d

FOR OFFICIAL USE ONLY

NOTE

1. THESE DRAWINGS SUPPLEMENT INFORMATION ON THE M E P /F P and SECURITY DRAWINGS AND ARE TO BE USED FOR DIMENSIONAL LOCATION OF ALL M E P /F P AND SECURITY SYSTEMS ALL M E P /F P AND SECURITY SYSTEMS SCOPE AND CONTENTS SHALL BE PER M E P AND SECURITY DRAWINGS

2 SEE M E P AND SECURITY DRAWINGS FOR ELECTRICAL MECHANICAL FIRE PROTECTION AND SECURITY DEVICE LOCATIONS IN THE FOLLOWING ROOMS JANITOR'S CLOSETS ELECTRICAL CLOSETS TELEPHONE AND DATA CLOSETS AV STORAGE CLOSETS, KITCHENS AND GENERAL STORAGE ROOMS

3 NOTIFY THE ARCHITECT IN THE EVENT OF ANY DISCREPANCIES BETWEEN THE MECHANICAL ELECTRICAL PLUMBING FIRE PROTECTION AND SECURITY DRAWINGS AND THE REFLECTED CEILING PLANS THE ARCHITECTURAL CEILING PLANS SHALL GOVERN ALL LOCATIONS AND DIMENSIONS OF ALL EXPOSED TO-VIEW ITEMS DO NOT PROCEED UNTIL DISCREPANCIES HAVE BEEN RESOLVED

4 FOR CEILING TYPE AND LOCATION OF FINISH REFER TO FINISH SCHEDULE

5 FOR CEILING HEIGHTS IN STAIRS SEE STAIR DETAILS

6 START PONT OF CEILING GRID SHALL BE CENTER OF TILE AT CENTER OF ROOM U O N

7 WHEN ACOUSTICAL CEILING TILE EXCEEDS 2 X2 PROVIDE 2 X 4 ACOUSTICAL CEILING TILE TO BE FIELD CUT

8 ALL CEILING MOUNTED DEVICES (INCLUDING EXIT SIGNS-NOT ADJACENT TO DOORS SMOKE DETECTORS LIGHT FIXTURES) SHALL BE CENTERED ON CEILING TILE U O N

9 ALL FIRE STROBES SHALL BE LOCATED 6½ FROM THE ADJACENT DOOR FRAME TO THE CENTERLINE OF THE STROBE U O N ON EITHER THE REFLECTED CEILING PLANS OR THE INTERIOR ELEVATIONS

10 STEM AND PENDANT MOUNTED FIXTURES SHALL BE INSTALLED AT HEIGHT (BOTTOM OF FIXTURE A F F) INDICATED IN THE SPECIFICATIONS

KEY

EXPOSED AND SEALED SLAB
PTD GWB
PERFORATED WOOD ACOUSTICAL PANEL W/ BATT INSULATION
PAINTED ALUMINUM PANEL SYSTEM
EXPOSED AND SEALED WAFFLE SLAB
ORNAMENTAL GLASS AND METAL CANOPY
STAINLESS STEEL FINISH
PLASTER FINISH
2 X2 CLG TILES NOTE WASHABLE SURFACE IN ALL KITCHEN/PANTRY AREAS
PERFORATED METAL ACOUSTICAL PANEL OR AIR REGISTER WHERE NOTED
RIBBED WOOD ACOUSTIC PANEL
ARCHITECTURAL ACOUSTICAL PANELS
FIELD FINISHED MINERAL FIBER ACOUSTIC PANEL OVER GYP BD CEILING ASSEMBLY

RCP DEVICE KEY

FLOOR/CEILING OUTLET
SPEAKER/STROBE
GLASS BREAK DETECTOR
CEIL MTD MOTION DETECTOR
WALL MTD MOTION DETECTOR
CEIL MTD SECURITY SPEAKER
WALL MTD SECURITY SPEAKER
CEIL MTD AV SPEAKER
WALL MTD AV SPEAKER
SECURITY CAMERA
CLG MTD SMOKE/HEAT DETECTOR
CLG MTD EXIT
WALL MTD EXIT
CLG MTD SPRINKLER HEAD
WALL MTD SPRINKLER HEAD
RETURN OUTLET CLG DIFFUSER
SUPPLY OUTLET CLG DIFFUSER
LINEAR SUPPLY DIFFUSER
WIRELESS ALARM ANTENNA/ TRANSMITTER
TELEVISION OUTLET

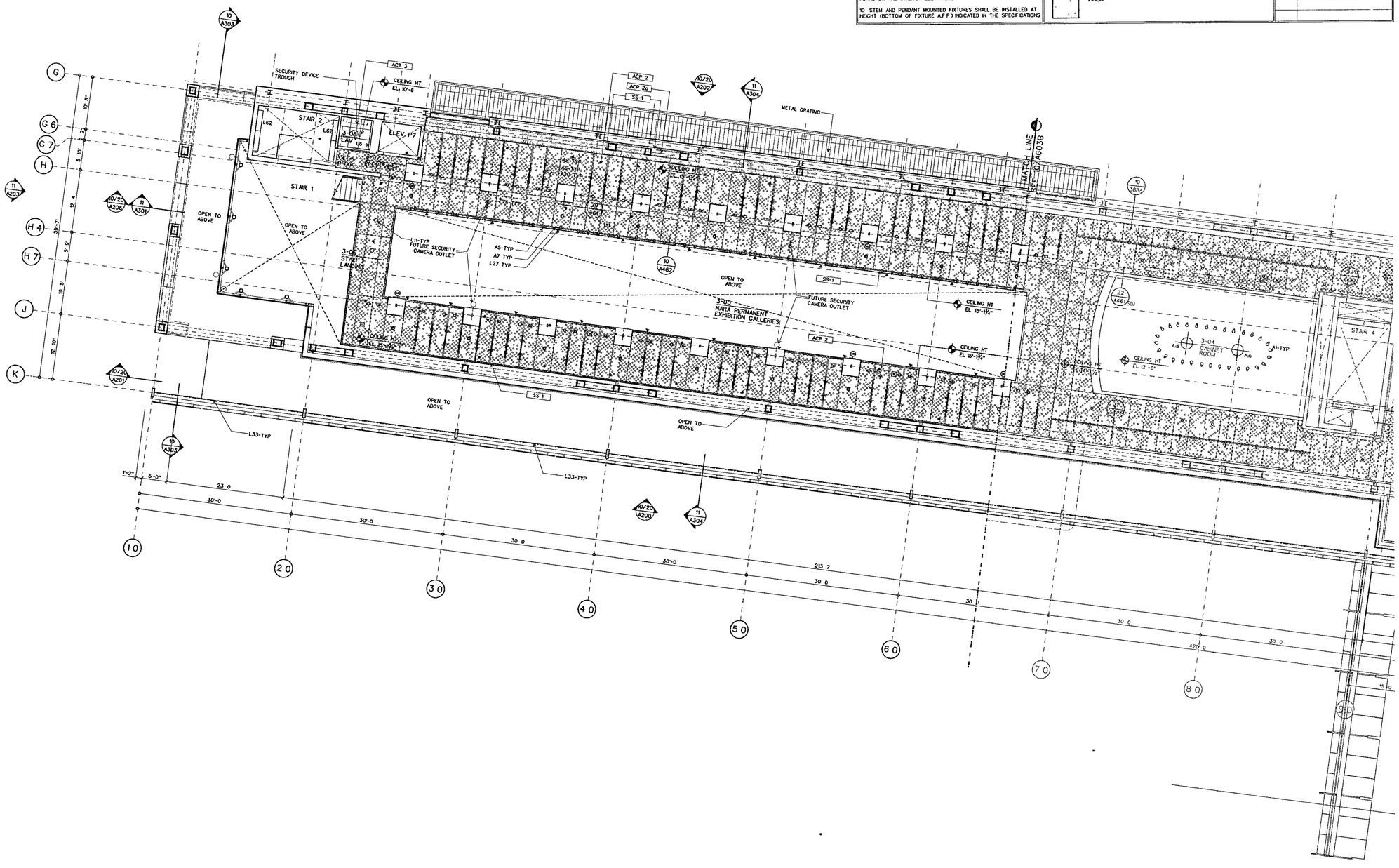

LOWER MUSEUM LEVEL REFLECTED CEILING PLAN A

SCALE 1/8" = 1'-0"

RCP-03 DGN 10

WILLIAM J CLINTON PRESIDENTIAL CENTER

LITTLE ROCK, ARKANSAS

Architect

POLSHEK PARTNERSHIP LLP
320 West 13th Street
New York, New York 10014
212 807 7171

Coordinating Architects

POLK STANLEY YEARY ARCHITECTS Ltd
700 South Schiller Street
Little Rock, Arkansas 72201
501 378 0878

WITSELL EVANS RASCO
901 West Third Street
Little Rock, Arkansas 72201
501 374 5300

WOODS CARADINE ARCHITECTS
2200 South Main Street
Little Rock, Arkansas 72206
501 374 4060

Landscape Architects

HARGREAVES ASSOCIATES
118 Magazine Street
Cambridge Massachusettas 02139
617.661 0070

LANDSCAPE ARCHITECTURE Inc.
2300 Cottondale Lane Suite 202
Little Rock, Arkansas 72202
501 374 5610

Structural Engineer

LESLIE E ROBERTSON ASSOC RLLP
30 Broad Street, 47th Floor
New York, New York 10004
212.750 9000

MEP Engineers

FLACK + KURTZ Inc.
475 Fifth Avenue
New York, New York 10017
212 532 9600

CROMWELL ARCHITECTS ENGINEERS
101 South Spring Street
Little Rock, Arkansas 72201
501 372 2900

Curtainwall Consultant

R A. HEINTGES ARCHITECTS
126 Fifth Avenue 9th Floor
New York, New York 10011
212.652-2966

Seal

RICHARD OLSEN REGISTERED ARCHITECT 3405 ARKANSAS

Issue	Date
100% Construction Documents	09/27/02
90% Progress Printing	08/30/02
100% Struct / CD Progress	07/01/02
100% Steel & Concrete CD & Architectural CD Progress	05/15/02
100% Design Development	03/01/02

Job No 9908

Scale 1/8" = 1'-0"

Date September 27, 2002

Title MUSEUM LOWER LEVEL PARTIAL REFLECTED CEILING PLAN

Sheet No A603a

FOR OFFICIAL USE ONLY

NOTE	KEY		RCP DEVICE KEY
1. THESE DRAWINGS SUPPLEMENT INFORMATION ON THE M E P/F P and SECURITY DRAWINGS AND ARE TO BE USED FOR DIMENSIONAL LOCATION OF ALL M E P/F P AND SECURITY SYSTEMS ALL M E P/F P AND SECURITY SYSTEMS SCOPE AND CONTENTS SHALL BE PER M E P AND SECURITY DRAWINGS	EXPOSED AND SEALED SLAB	PLASTER FINISH	FLOOR/CEILING OUTLET
2. SEE M E P AND SECURITY DRAWINGS FOR ELECTRICAL MECHANICAL FIRE PROTECTION AND SECURITY DEVICE LOCATIONS IN THE FOLLOWING ROOMS JANITOR'S CLOSETS ELECTRICAL CLOSETS TELEPHONE AND DATA CLOSETS AV STORAGE CLOSETS KITCHENS AND GENERAL STORAGE ROOMS	PTD GWB	2 X2' CLG TILES NOTE WASHABLE SURFACE IN ALL KITCHEN/PANTRY AREAS	SPEAKER/STROBE
3. NOTIFY THE ARCHITECT IN THE EVENT OF ANY DISCREPANCIES BETWEEN THE MECHANICAL ELECTRICAL PLUMBING FIRE PROTECTION AND SECURITY DRAWINGS AND THE REFLECTED CEILING PLANS THE ARCHITECTURAL CEILING PLANS SHALL GOVERN ALL LOCATIONS AND DIMENSIONS OF ALL EXPOSED-TO-VIEW ITEMS DO NOT PROCEED UNTIL DISCREPANCIES HAVE BEEN RESOLVED	PERFORATED WOOD ACOUSTICAL PANEL W/ BATT INSULATION	PERFORATED METAL ACOUSTICAL PANEL OR AIR REGISTER WHERE NOTED	GLASS BREAK DETECTOR
4. FOR CEILING TYPE AND LOCATION OF FINISH REFER TO FINISH SCHEDULE	PAINTED ALUMINUM PANEL SYSTEM	RIBBED WOOD ACOUSTIC PANEL	CEIL MTD MOTION DETECTOR
5. FOR CEILING HEIGHTS IN STAIRS SEE STAIR DETAILS	EXPOSED AND SEALED WAFFLE SLAB	ARCHITECTURAL ACCOUSTICAL PANELS	WALL MTD MOTION DETECTOR
6. START POINT OF CEILING GRID SHALL BE CENTER OF TILE AT CENTER OF ROOM U O N	ORNAMENTAL GLASS AND METAL CANOPY	FIELD FINISHED MINERAL FIBER ACOUSTIC PANEL OVER GYP BD CEILING ASSEMBLY	CEIL MTD SECURITY SPEAKER
7. WHEN ACOUSTICAL CEILING TILE EXCEEDS 2 X2 PROVIDE 2 X 4 ACOUSTICAL CEILING TILE TO BE FIELD CUT	STAINLESS STEEL FINISH		WALL MTD SECURITY SPEAKER
8. ALL CEILING MOUNTED DEVICES (INCLUDING EXIT SIGNS-NOT ADJACENT TO DOORS SMOKE DETECTORS LIGHT FIXTURES) SHALL BE CENTERED ON CEILING TILE U O N			CEIL MTD AV SPEAKER
9. ALL FIRE STROBES SHALL BE LOCATED 6½" FROM THE ADJACENT DOOR FRAME TO THE CENTERLINE OF THE STROBE U O N. ON EITHER THE REFLECTED CEILING PLANS OR THE INTERIOR ELEVATIONS			WALL MTD AV SPEAKER
10. STEM AND PENDANT MOUNTED FIXTURES SHALL BE INSTALLED AT HEIGHT (BOTTOM OF FIXTURE A F F) INDICATED IN THE SPECIFICATIONS			SECURITY CAMERA
			CLG MTD SMOKE/HEAT DETECTOR
			CLG MTD EXIT
			WALL MTD EXIT
			CLG MTD SPRINKLER HEAD
			WALL MTD SPRINKLER HEAD
			RETURN OUTLET CLG DIFFUSER
			SUPPLY OUTLET CLG DIFFUSER
			LINEAR SUPPLY DIFFUSER
			WIRELESS ALARM ANTENNA/ TRANSMITTER
			TELEVISION OUTLET

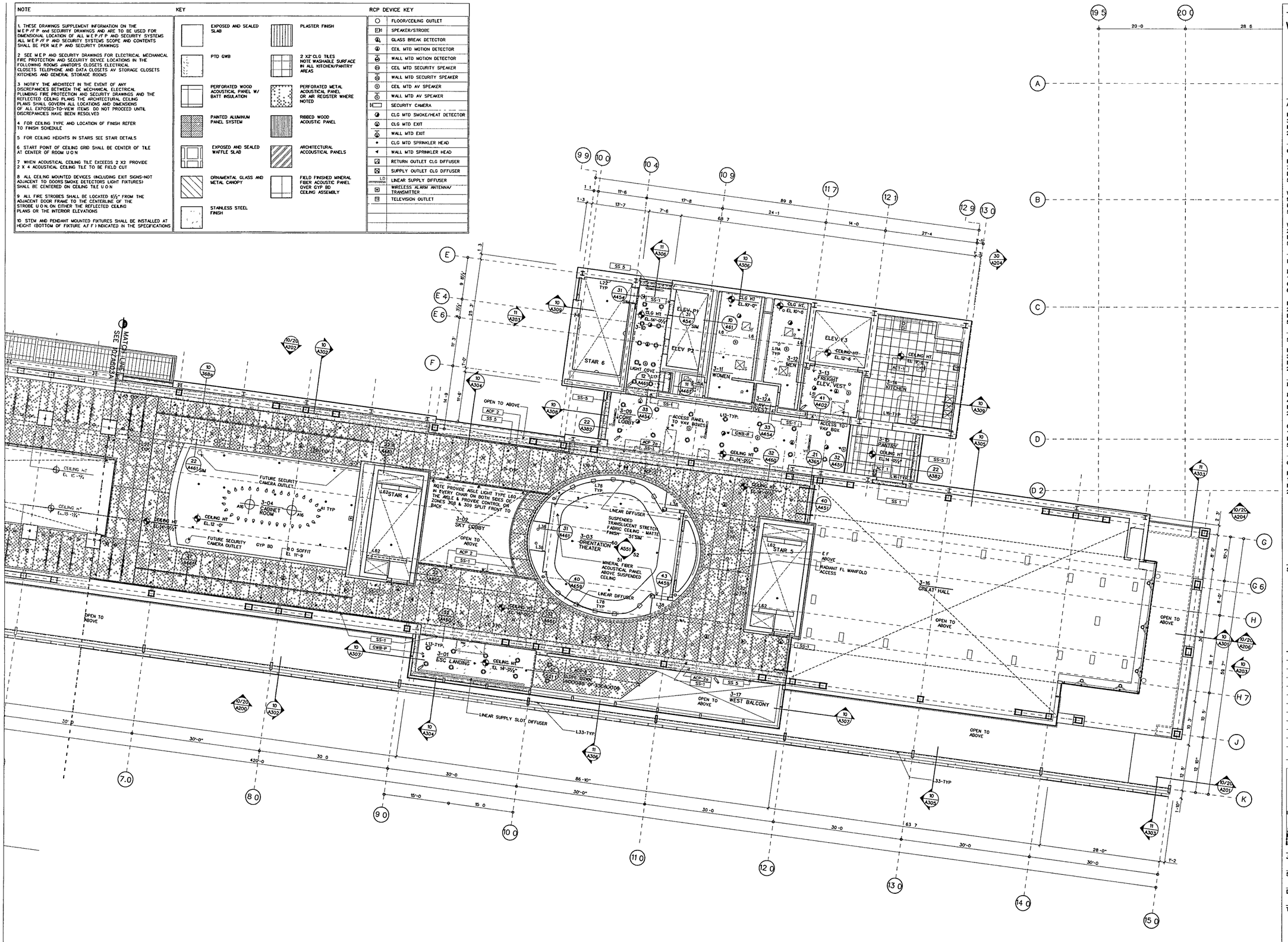

LOWER MUSEUM LEVEL REFLECTED CEILING PLAN B

SCALE 1/8 = 1-0"

RCP-03 DGN

10

WILLIAM J CLINTON PRESIDENTIAL CENTER

LITTLE ROCK, ARKANSAS

Architect

POLSHEK PARTNERSHIP LLP
320 West 13th Street
New York New York 10014
212.807 7171

Coordinating Architects

POLK STANLEY YEARY ARCHITECTS Ltd
700 South Schiller Street
Little Rock, Arkansas 72201
501 378 0878

WITSELL EVANS RASCO
901 West Third Street
Little Rock Arkansas 72201
501 374 5300

WOODS CARADINE ARCHITECTS
2200 South Main Street
Little Rock, Arkansas 72206
501 374 4060

Landscape Architects

HARGREAVES ASSOCIATES
118 Magazine Street
Cambridge Massachusettes 02139
617 661 0070

LANDSCAPE ARCHITECTURE Inc.
2300 Cottondale Lane Suite 202
Little Rock, Arkansas 72202
501 374 5810

Structural Engineer

LESLIE E ROBERTSON ASSOC , RLLP
30 Broad Street, 47th Floor
New York, New York 10004
212 750 9000

MEP Engineers

FLACK + KURTZ Inc
475 Fifth Avenue
New York, New York 10017
212.532.9600

CROMWELL ARCHITECTS ENGINEERS
101 South Spring Street
Little Rock, Arkansas 72201
501 372.2900

Curtainwall Consultant

R A. HEINTGES ARCHITECTS
126 Fifth Avenue, 9th Floor
New York New York 10011
212.652-2966

Seal

RICHARD OLSON REGISTERED ARCHITECT 2405 ARKANSAS

Issue	Date
100% Construction Documents	09/27/02
90% Progress Printing	08/30/02
100% Struct./ CD Progress	07/01/02
100% Steel & Concrete CD & Architectural CD Progress	05/15/02
100% Design Development	03/01/02

Job No 9908

Scale 1/8" = 1-0"

Date September 27, 2002

Title MUSEUM LOWER LEVEL PARTIAL REFLECTED CEILING PLAN

Sheet No A603b

FOR OFFICIAL USE ONLY

NOTE	KEY			RCP DEVICE KEY
1 THESE DRAWINGS SUPPLEMENT INFORMATION ON THE M E P /F P and SECURITY DRAWINGS AND ARE TO BE USED FOR DIMENSIONAL LOCATION OF ALL M E P /F P AND SECURITY SYSTEMS ALL M E P /F P AND SECURITY SYSTEMS SCOPE AND CONTENTS SHALL BE PER M E P AND SECURITY DRAWINGS.	EXPOSED AND SEALED SLAB	PLASTER FINISH		FLOOR/CEILING OUTLET
2 SEE M E P AND SECURITY DRAWINGS FOR ELECTRICAL MECHANICAL FIRE PROTECTION AND SECURITY DEVICE LOCATIONS IN THE FOLLOWING ROOMS JANITOR'S CLOSETS ELECTRICAL CLOSETS, TELEPHONE AND DATA CLOSETS AV STORAGE CLOSETS KITCHENS AND GENERAL STORAGE ROOMS	PTD. GWB	2' X2' CLG TILES NOTE WASHABLE SURFACE IN ALL KITCHEN/PANTRY AREAS		SPEAKER/STROBE
3 NOTIFY THE ARCHITECT IN THE EVENT OF ANY DISCREPANCIES BETWEEN THE MECHANICAL, ELECTRICAL, PLUMBING FIRE PROTECTION AND SECURITY DRAWINGS AND THE REFLECTED CEILING PLANS THE ARCHITECTURAL CEILING PLANS SHALL GOVERN ALL LOCATIONS AND DIMENSIONS OF ALL EXPOSED TO VIEW ITEMS DO NOT PROCEED UNTIL DISCREPANCIES HAVE BEEN RESOLVED	PERFORATED WOOD ACOUSTICAL PANEL W/ BATT INSULATION	PERFORATED METAL ACOUSTICAL PANEL OR AIR REGISTER WHERE NOTED		GLASS BREAK DETECTOR
4 FOR CEILING TYPE AND LOCATION OF FINISH REFER TO FINISH SCHEDULE	PAINTED ALUMINUM PANEL SYSTEM	REEED WOOD ACOUSTIC PANEL		CEIL MTD MOTION DETECTOR
5 FOR CEILING HEIGHTS IN STAIRS SEE STAIR DETAILS.	EXPOSED AND SEALED WAFFLE SLAB	ARCHITECTURAL ACCOUSTICAL PANELS		WALL MTD MOTION DETECTOR
6 START POINT OF CEILING GRID SHALL BE CENTER OF TILE AT CENTER OF ROOM U O N	ORNAMENTAL GLASS AND METAL CANOPY	FIELD FINISHED MINERAL FIBER ACOUSTIC PANEL OVER GYP BD. CEILING ASSEMBLY		CEIL MTD. SECURITY SPEAKER
7 WHEN ACOUSTICAL CEILING TILE EXCEEDS 2 X2 PROVIDE 2 X 4 ACOUSTICAL CEILING TILE TO BE FIELD CUT	STAINLESS STEEL FINISH			WALL MTD SECURITY SPEAKER
8 ALL CEILING MOUNTED DEVICES (INCLUDING EXIT SIGNS NOT ADJACENT TO DOORS,SMOKE DETECTORS LIGHT FIXTURES) SHALL BE CENTERED ON CEILING TILE U O N				CEIL MTD AV SPEAKER
9 ALL FIRE STROBES SHALL BE LOCATED 6½" FROM THE ADJACENT DOOR FRAME TO THE CENTERLINE OF THE STROBE U O N, ON EITHER THE REFLECTED CEILING PLANS OR THE INTERIOR ELEVATIONS				WALL MTD. AV SPEAKER
10 STEM AND PENDANT MOUNTED FIXTURES SHALL BE INSTALLED AT HEIGHT (BOTTOM OF FIXTURE A.F.F.) INDICATED IN THE SPECIFICATIONS				SECURITY CAMERA
				CLG MTD SMOKE/HEAT DETECTOR
				CLG MTD EXIT
				WALL MTD EXIT
				CLG MTD SPRINKLER HEAD
				WALL MTD SPRINKLER HEAD
				RETURN OUTLET CLG DIFFUSER
				SUPPLY OUTLET CLG DIFFUSER
				LINEAR SUPPLY DIFFUSER
				WIRELESS ALARM ANTENNA/ TRANSMITTER
				TELEVISION OUTLET
				CIRCULAR DIFFUSER

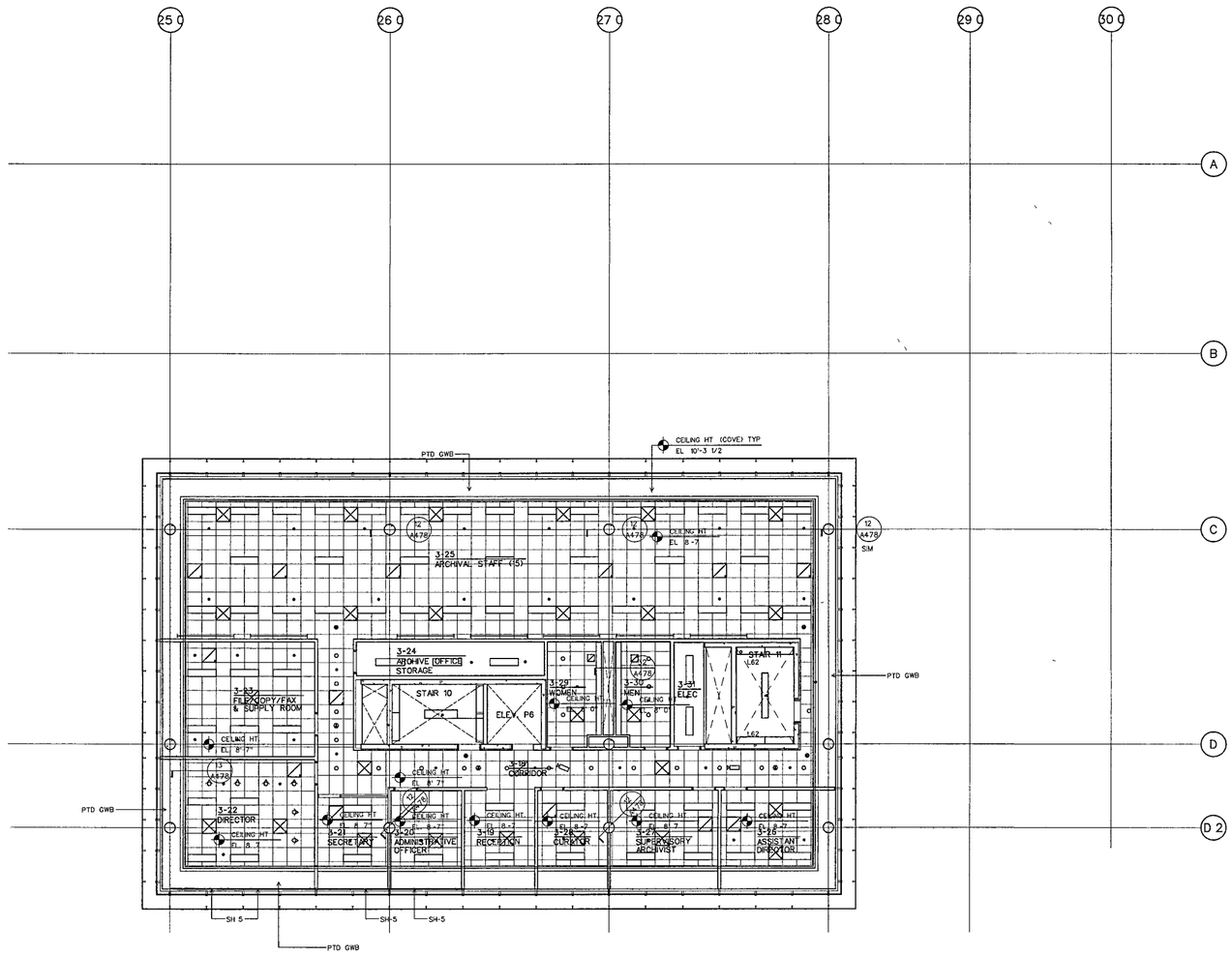

THIRD LEVEL REFLECTED CEILING PLAN D

SCALE 1/8" = 1'-0"

AFP-03 dwg

10

WILLIAM J. CLINTON PRESIDENTIAL CENTER

LITTLE ROCK, ARKANSAS

Architect

POLSHEK PARTNERSHIP LLP
320 West 13th Street
New York, New York 10014
212 807 7171

Coordinating Architects

POLK STANLEY YEARY ARCHITECTS Ltd
700 South Schiller Street
Little Rock, Arkansas 72201
501 378 0878

WITSELL EVANS RASCO
901 West Third Street
Little Rock, Arkansas 72201
501 374 5300

WOODS CARADINE ARCHITECTS
2200 South Main Street
Little Rock, Arkansas 72206
501 374 4060

Landscape Architects

HARGREAVES ASSOCIATES
118 Magazine Street
Cambridge Massachusettes 02139
617 661 0070

LANDSCAPE ARCHITECTURE, Inc.
2300 Cottondale Lane Suite 202
Little Rock, Arkansas 72202
501 374 5610

Structural Engineer

LESLIE E ROBERTSON ASSOC , RLLP
30 Broad Street, 47th Floor
New York, New York 10004
212 750 9000

MEP Engineers

FLACK + KURTZ Inc
475 Fifth Avenue
New York, New York 10017
212 532 9600

CROMWELL ARCHITECTS ENGINEERS
101 South Spring Street
Little Rock, Arkansas 72201
501 372.2900

Curtainwall Consultant

R A. HEINTGES ARCHITECTS
126 Fifth Avenue, 9th Floor
New York, New York 10011
212 652 2966

Seal

WITSELL EVANS & RASCO P.A. REGISTERED ARCHITECTS 9-27-02 NO C44 ARKANSAS

Issue	Date
100% Construction Documents	09/27/02
90% Progress Printing	08/30/02
100% Struct./CD Progress	07/01/02
Bridge Bldg Substructure	06/14/02
100% Steel & Concrete CD	05/15/02
& Architectural CD Progress	
100% Design Development	03/01/02

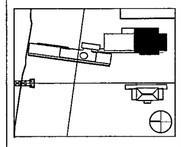

Job No
9908

Scale
1/8" = 1'-0"

Date
September 27, 2002

Title
THIRD LEVEL REFLECTED CEILING PLAN

Sheet No
A603d

FOR OFFICIAL USE ONLY

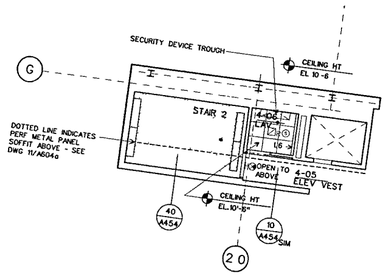

UPPER MUSEUM LEVEL ELEVATOR AND STAIR 1 CORE REFLECTED CEILING PLAN A

SCALE 1/8" = 1'-0"

20

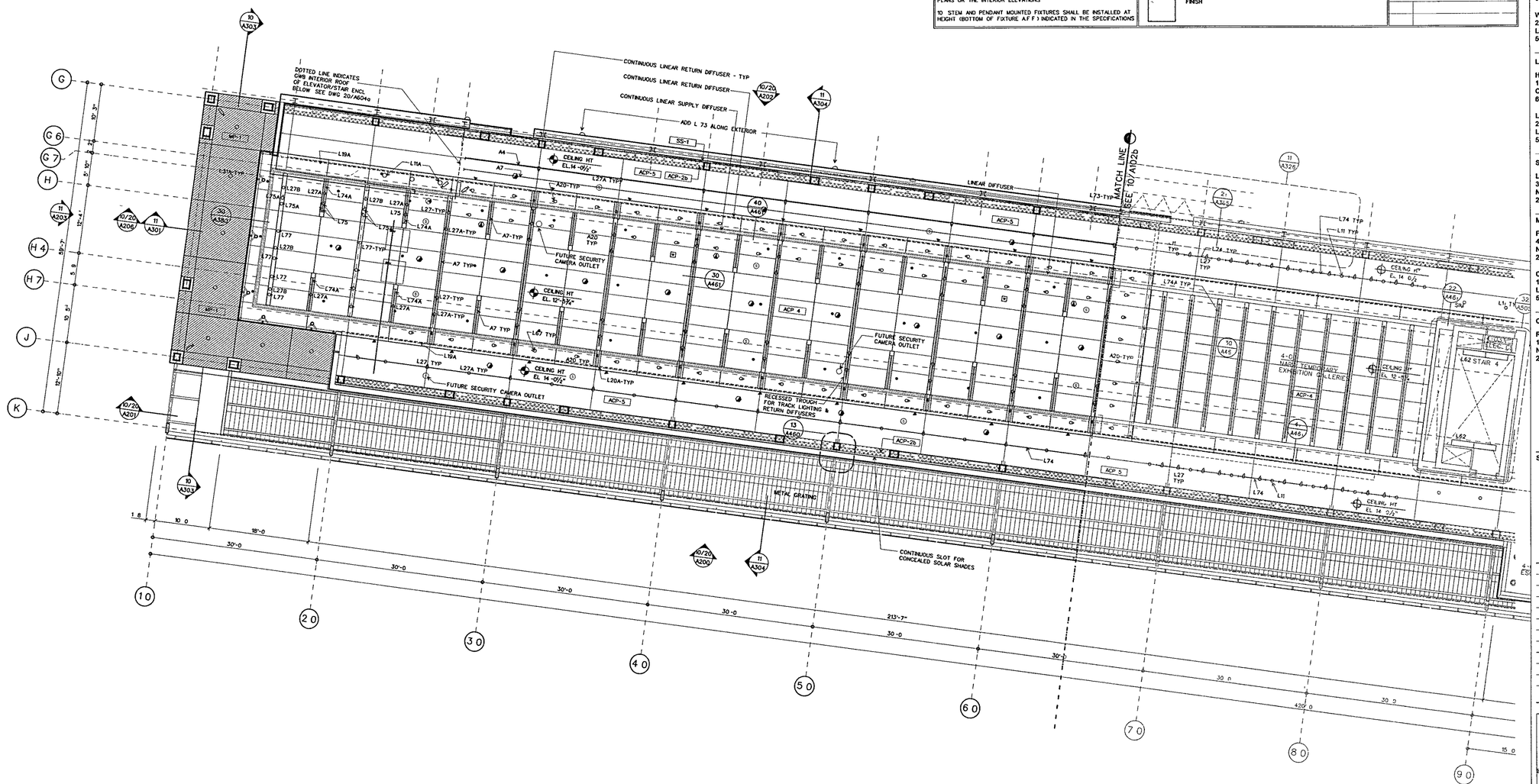

UPPER MUSEUM LEVEL REFLECTED CEILING PLAN A

SCALE 1/8" = 1'-0"

RCP-04 DGN

10

NOTE

1. THESE DRAWINGS SUPPLEMENT INFORMATION ON THE M E P /F P and SECURITY DRAWINGS AND ARE TO BE USED FOR DIMENSIONAL LOCATION OF ALL M E P /F P AND SECURITY SYSTEMS ALL M E P /F P AND SECURITY SYSTEMS SCOPE AND CONTENTS SHALL BE PER M E P AND SECURITY DRAWINGS

2 SEE M E P AND SECURITY DRAWINGS FOR ELECTRICAL MECHANICAL FIRE PROTECTION AND SECURITY DEVICE LOCATIONS IN THE FOLLOWING ROOMS JANITOR'S CLOSETS ELECTRICAL CLOSETS TELEPHONE AND DATA CLOSETS AV STORAGE CLOSETS KITCHENS AND GENERAL STORAGE ROOMS

3 NOTIFY THE ARCHITECT IN THE EVENT OF ANY DISCREPANCES BETWEEN THE MECHANICAL ELECTRICAL PLUMBING FIRE PROTECTION AND SECURITY DRAWINGS AND THE REFLECTED CEILING PLANS THE ARCHITECTURAL CEILING PLANS SHALL COVERN ALL LOCATIONS AND DIMENSIONS OF ALL EXPOSED TO-VIEW ITEMS DO NOT PROCEED UNTIL DISCREPANCIES HAVE BEEN RESOLVED

4 FOR CEILING TYPE AND LOCATION OF FINISH REFER TO FINISH SCHEDULE

5 FOR CEILING HEIGHTS IN STAIRS SEE STAIR DETAILS

6 START POINT OF CEILING GRID SHALL BE CENTER OF TILE AT CENTER OF ROOM U O N

7 WHEN ACOUSTICAL CEILING TILE EXCEEDS 2 X2 PROVIDE 2 X 4 ACOUSTICAL CEILING TILE TO BE FIELD CUT

8 ALL CEILING MOUNTED DEVICES (INCLUDING EXIT SIGNS-NOT ADJACENT TO DOORS SMOKE DETECTORS LIGHT FIXTURES) SHALL BE CENTERED ON CEILING TILE U O N

9 ALL FIRE STROBES SHALL BE LOCATED 6½ FROM THE ADJACENT DOOR FRAME TO THE CENTERLINE OF THE STROBE U O N. ON EITHER THE REFLECTED CEILING PLANS OR THE INTERIOR ELEVATIONS

10 STEM AND PENDANT MOUNTED FIXTURES SHALL BE INSTALLED AT HEIGHT (BOTTOM OF FIXTURE A F F) INDICATED IN THE SPECIFICATIONS

KEY

- EXPOSED AND SEALED SLAB
- PTD GWB
- PERFORATED WOOD ACOUSTICAL PANEL W/ BATT INSULATION
- PAINTED ALUMINUM PANEL SYSTEM
- EXPOSED AND SEALED WAFFLE SLAB
- ORNAMENTAL GLASS AND METAL CANOPY
- STAINLESS STEEL FINISH
- PLASTER FINISH
- 2 X2 CLG TILES NOTE WASHABLE SURFACE IN ALL KITCHEN/PANTRY AREAS
- PERFORATED METAL ACOUSTICAL PANEL OR AIR REGISTER WHERE NOTED
- RIBBED WOOD ACOUSTIC PANEL
- ARCHITECTURAL ACOUSTICAL PANELS
- FIELD FINISHED MINERAL FIBER ACOUSTIC PANEL OVER GYP BD CEILING ASSEMBLY

RCP DEVICE KEY

- FLOOR/CEILING OUTLET
- SPEAKER/STROBE
- GLASS BREAK DETECTOR
- CEIL MTD MOTION DETECTOR
- WALL MTD MOTION DETECTOR
- CEIL MTD SECURITY SPEAKER
- WALL MTD SECURITY SPEAKER
- CEIL MTD AV SPEAKER
- WALL MTD AV SPEAKER
- SECURITY CAMERA
- CLG MTD SMOKE/HEAT DETECTOR
- CLG MTD EXIT
- WALL MTD EXIT
- CLG MTD SPRINKLER HEAD
- WALL MTD SPRINKLER HEAD
- RETURN OUTLET CLG DIFFUSER
- SUPPLY OUTLET CLG DIFFUSER
- LD LINEAR SUPPLY DIFFUSER
- WIRELESS ALARM ANTENNA/ TRANSMITTER
- TELEVISION OUTLET

WILLIAM J CLINTON PRESIDENTIAL CENTER

LITTLE ROCK, ARKANSAS

Architect

POLSHEK PARTNERSHIP LLP
320 West 13th Street
New York, New York 10014
212 807 7171

Coordinating Architects

POLK STANLEY YEARY ARCHITECTS Ltd
700 South Schiller Street
Little Rock, Arkansas 72201
501 378 0878

WITSELL EVANS RASCO
901 West Third Street
Little Rock Arkansas 72201
501 374 5300

WOODS CARADINE ARCHITECTS
2200 South Main Street
Little Rock Arkansas 72206
501 374 4060

Landscape Architects

HARGREAVES ASSOCIATES
118 Magazine Street
Cambridge Massachusettes 02139
617 661 0070

LANDSCAPE ARCHITECTURE, Inc.
2300 Cottondale Lane Suite 202
Little Rock, Arkansas 72202
501 374 5810

Structural Engineer

LESLIE E. ROBERTSON ASSOC RLLP
30 Broad Street, 47th Floor
New York, New York 10004
212 750 9000

MEP Engineers

FLACK + KURTZ Inc
475 Fifth Avenue
New York, New York 10017
212 532.9600

CROMWELL ARCHITECTS ENGINEERS
101 South Spring Street
Little Rock, Arkansas 72201
501 372 2900

Curtainwall Consultant

R. A. HEINTGES ARCHITECTS
126 Fifth Avenue 9th Floor
New York, New York 10011
212.652-2966

Seal

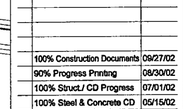

Issue	Date
100% Construction Documents	09/27/02
90% Progress Printing	08/30/02
100% Struct/ CD Progress	07/01/02
100% Steel & Concrete CD	05/15/02
& Architectural CD Progress	
100% Design Development	03/01/02

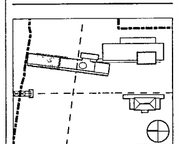

Job No 9908

Scale 1/8" = 1'-0"

Date September 27, 2002

Title MUSEUM UPPER LEVEL PARTIAL REFLECTED CEILING PLAN

Sheet No A604a

FOR OFFICIAL USE ONLY

NOTE	KEY	RCP DEVICE KEY
1. THESE DRAWINGS SUPPLEMENT INFORMATION ON THE M E P / F P and SECURITY DRAWINGS AND ARE TO BE USED FOR DIMENSIONAL LOCATION OF ALL M E P / F P AND SECURITY SYSTEMS. ALL M E P / F P AND SECURITY SYSTEMS SCOPE AND CONTENTS SHALL BE PER M.E.P AND SECURITY DRAWINGS 2. SEE M E P AND SECURITY DRAWINGS FOR ELECTRICAL MECHANICAL FIRE PROTECTION AND SECURITY DEVICE LOCATIONS IN THE FOLLOWING ROOMS JANITOR'S CLOSETS ELECTRICAL CLOSETS TELEPHONE AND DATA CLOSETS AV STORAGE CLOSETS KITCHENS AND GENERAL STORAGE ROOMS 3. NOTIFY THE ARCHITECT IN THE EVENT OF ANY DISCREPANCIES BETWEEN THE MECHANICAL ELECTRICAL PLUMBING FIRE PROTECTION, AND SECURITY DRAWINGS AND THE REFLECTED CEILING PLANS THE ARCHITECTURAL CEILING PLANS SHALL GOVERN ALL LOCATIONS AND DIMENSIONS OF ALL EXPOSED-TO VIEW ITEMS DO NOT PROCEED UNTIL DISCREPANCIES HAVE BEEN RESOLVED 4. FOR CEILING TYPE AND LOCATION OF FINISH REFER TO FINISH SCHEDULE 5. FOR CEILING HEIGHTS IN STAIRS SEE STAIR DETAILS 6. START POINT OF CEILING GRID SHALL BE CENTER OF TILE AT CENTER OF ROOM U.O.N. 7. WHEN ACOUSTICAL CEILING TILE EXCEEDS 2 X2 PROVIDE 2 X 4 ACOUSTICAL CEILING TILE TO BE FIELD CUT 8. ALL CEILING MOUNTED DEVICES (INCLUDING EXIT SIGNS-NOT ADJACENT TO DOORS,SMOKE DETECTORS LIGHT FIXTURES) SHALL BE CENTERED ON CEILING TILE U O N 9. ALL FIRE STROBES SHALL BE LOCATED 6½" FROM THE ADJACENT DOOR FRAME TO THE CENTERLINE OF THE STROBE U O N ON EITHER THE REFLECTED CEILING PLANS OR THE INTERIOR ELEVATIONS 10. STEM AND PENDANT MOUNTED FIXTURES SHALL BE INSTALLED AT HEIGHT (BOTTOM OF FIXTURE A F F) INDICATED IN THE SPECIFICATIONS	EXPOSED AND SEALED SLAB PLASTER FINISH PTD GWB 2 X2 CLG TILES NOTE WASHABLE SURFACE IN ALL KITCHEN/PANTRY AREAS PERFORATED WOOD ACOUSTICAL PANEL W/ BATT INSULATION PERFORATED METAL ACOUSTICAL PANEL OR AIR REGISTER WHERE NOTED PAINTED ALUMINUM PANEL SYSTEM RIBBED WOOD ACOUSTIC PANEL EXPOSED AND SEALED WAFFLE SLAB ARCHITECTURAL ACCOUSTICAL PANELS ORNAMENTAL GLASS AND METAL CANOPY FIELD FINISHED MINERAL FIBER ACOUSTIC PANEL OVER GYP BD CEILING ASSEMBLY STAINLESS STEEL FINISH	FLOOR/CEILING OUTLET SPEAKER/STROBE GLASS BREAK DETECTOR CEIL MTD MOTION DETECTOR WALL MTD MOTION DETECTOR CEIL MTD SECURITY SPEAKER WALL MTD SECURITY SPEAKER CEIL MTD AV SPEAKER WALL MTD AV SPEAKER SECURITY CAMERA CLG MTD SMOKE/HEAT DETECTOR CLG MTD EXIT WALL MTD EXIT CLG MTD SPRINKLER HEAD WALL MTD SPRINKLER HEAD RETURN OUTLET CLG DIFFUSER SUPPLY OUTLET CLG DIFFUSER LINEAR SUPPLY DIFFUSER WIRELESS ALARM ANTENNA/ TRANSMITTER TELEVISION OUTLET

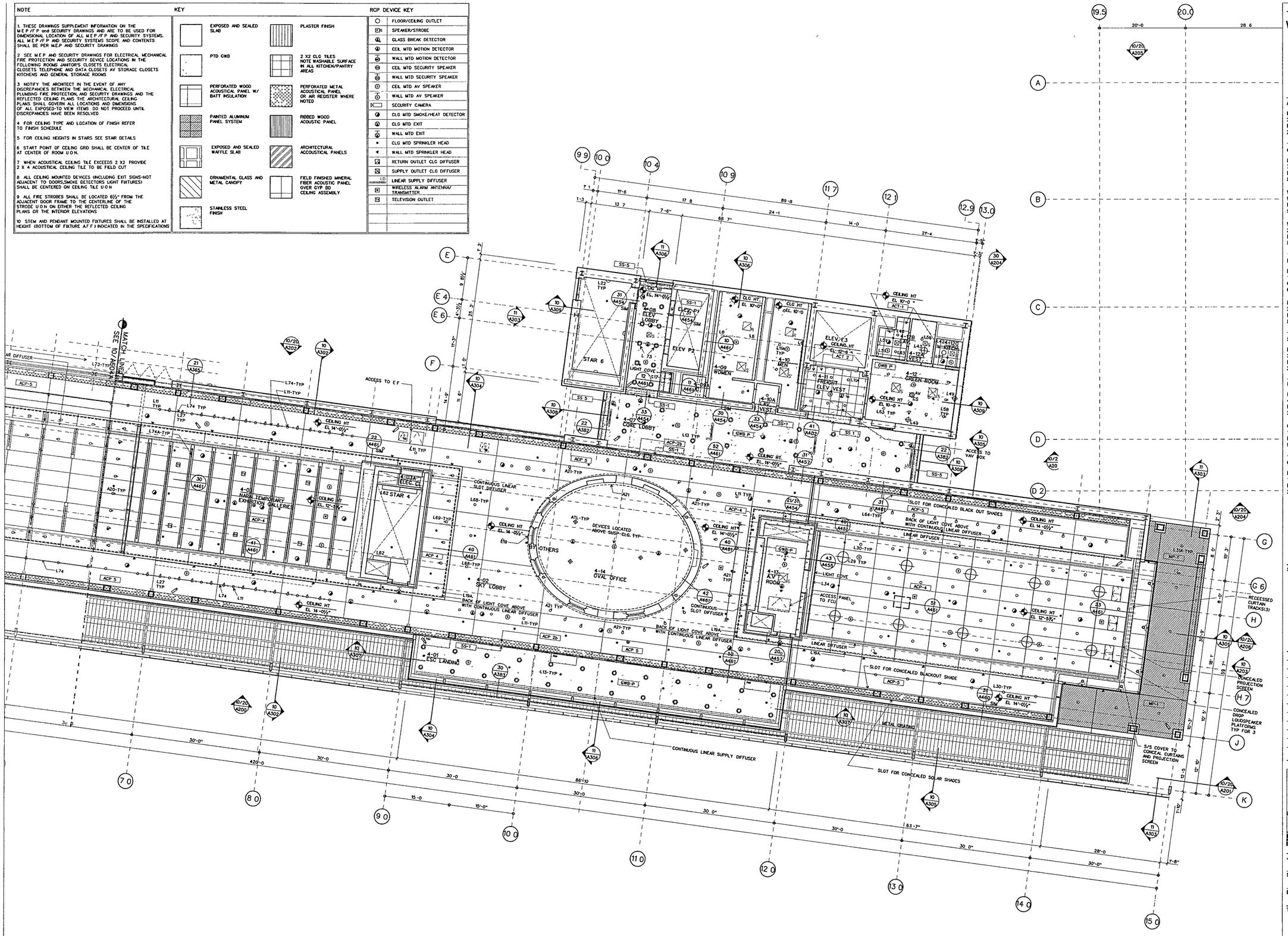

UPPER MUSEUM LEVEL REFLECTED CEILING PLAN B

SCALE 1/8" = 1'-0"

RCP-04 DGN

10

WILLIAM J CLINTON PRESIDENTIAL CENTER

LITTLE ROCK, ARKANSAS

Architect

POLSHEK PARTNERSHIP LLP
320 West 13th Street
New York, New York 10014
212 807 7171

Coordinating Architects

POLK STANLEY YEARY ARCHITECTS Ltd
700 South Schiller Street
Little Rock, Arkansas 72201
501 378 0878

WITSELL EVANS RASCO
901 West Third Street
Little Rock, Arkansas 72201
501 374 5300

WOODS CARADINE ARCHITECTS
2200 South Main Street
Little Rock, Arkansas 72206
501 374 4060

Landscape Architects

HARGREAVES ASSOCIATES
118 Magazine Street
Cambridge Massachusettes 02139
617 661 0070

LANDSCAPE ARCHITECTURE, Inc.
2300 Cottondale Lane Suite 202
Little Rock Arkansas 72202
501 374 5610

Structural Engineer

LESLIE E ROBERTSON ASSOC , RLLP
30 Broad Street, 47th Floor
New York, New York 10004
212.750 9000

MEP Engineers

FLACK + KURTZ Inc.
475 Fifth Avenue
New York, New York 10017
212 532.9600

CROMWELL ARCHITECTS ENGINEERS
101 South Spring Street
Little Rock, Arkansas 72201
501 372.2900

Curtainwall Consultant

R. A. HEINTGES ARCHITECTS
126 Fifth Avenue 9th Floor
New York, New York 10011
212 652-2966

Seal

RICHARD OLCOTT BENNETT ARCHITECT 3405 ARKANSAS

Issue	Date
100% Construction Documents	09/27/02
90% Progress Printing	08/30/02
100% Struct./ CD Progress	07/01/02
100% Steel & Concrete CD & Architectural CD Progress	05/15/02
100% Design Development	03/01/02

Job No 9908

Scale 1/8" = 1'-0"

Date September 27, 2002

Title MUSEUM UPPER LEVEL PARTIAL REFLECTED CEILING PLAN

Sheet No A604b

FOR OFFICIAL USE ONLY

NOTE

1 THESE DRAWINGS SUPPLEMENT INFORMATION ON THE M E P /F P and SECURITY DRAWINGS AND ARE TO BE USED FOR DIMENSIONAL LOCATION OF ALL M E P,/F P AND SECURITY SYSTEMS ALL M E P /F P AND SECURITY SYSTEMS SCOPE AND CONTENTS SHALL BE PER M E P AND SECURITY DRAWINGS

2 SEE M.E P AND SECURITY DRAWINGS FOR ELECTRICAL MECHANICAL FIRE PROTECTION AND SECURITY DEVICE LOCATIONS IN THE FOLLOWING ROOMS JANITOR'S CLOSETS ELECTRICAL CLOSETS, TELEPHONE AND DATA CLOSETS AV STORAGE CLOSETS KITCHENS AND GENERAL STORAGE ROOMS

3 NOTIFY THE ARCHITECT IN THE EVENT OF ANY DISCREPANCES BETWEEN THE MECHANICAL ELECTRICAL PLUMBING FIRE PROTECTION AND SECURITY DRAWINGS AND THE REFLECTED CEILING PLANS THE ARCHITECTURAL CEILING PLANS SHALL GOVERN ALL LOCATIONS AND DIMENSIONS OF ALL EXPOSED TO-VIEW ITEMS DO NOT PROCEED UNTIL DISCREPANCIES HAVE BEEN RESOLVED

4 FOR CEILING TYPE AND LOCATION OF FINISH REFER TO FINISH SCHEDULE

5 FOR CEILING HEIGHTS IN STAIRS, SEE STAIR DETAILS

6 START POINT OF CEILING GRID SHALL BE CENTER OF TILE AT CENTER OF ROOM U O N.

7 WHEN ACOUSTICAL CEILING TILE EXCEEDS 2 X2 PROVIDE 2 X 4 ACOUSTICAL CEILING TILE TO BE FIELD CUT

8 ALL CEILING MOUNTED DEVICES (INCLUDING EXIT SIGNS NOT ADJACENT TO DOORS,SMOKE DETECTORS LIGHT FIXTURES) SHALL BE CENTERED ON CEILING TILE U O N

9 ALL FIRE STROBES SHALL BE LOCATED 6½ FROM THE ADJACENT DOOR FRAME TO THE CENTERLINE OF THE STROBE U O N ON EITHER THE REFLECTED CEILING PLANS OR THE INTERIOR ELEVATIONS

10 STEM AND PENDANT MOUNTED FIXTURES SHALL BE INSTALLED AT HEIGHT (BOTTOM OF FIXTURE AF F) INDICATED IN THE SPECIFICATIONS

KEY

- EXPOSED AND SEALED SLAB
- PLASTER FINISH
- PTD GWB
- 2 X2 CLG TILES NOTE WASHABLE SURFACE IN ALL KITCHEN/PANTRY AREAS
- PERFORATED WOOD ACOUSTICAL PANEL W/ BATT INSULATION
- PERFORATED METAL ACOUSTICAL PANEL OR AIR REGISTER WHERE NOTED
- PAINTED ALUMINUM PANEL SYSTEM
- RIBBED WOOD ACOUSTIC PANEL
- EXPOSED AND SEALED WAFFLE SLAB
- ARCHITECTURAL ACCOUSTICAL PANELS
- ORNAMENTAL GLASS AND METAL CANOPY
- FIELD FINISHED MINERAL FIBER ACOUSTIC PANEL OVER GYP BD CEILING ASSEMBLY
- STAINLESS STEEL FINISH

RCP DEVICE KEY

- FLOOR/CEILING OUTLET
- SPEAKER/STROBE
- GLASS BREAK DETECTOR
- CEIL MTD MOTION DETECTOR
- WALL MTD MOTION DETECTOR
- CEIL MTD SECURITY SPEAKER
- WALL MTD SECURITY SPEAKER
- CEIL MTD AV SPEAKER
- WALL MTD AV SPEAKER
- SECURITY CAMERA
- CLG. MTD SMOKE/HEAT DETECTOR
- CLG MTD EXIT
- WALL MTD EXIT
- CLG MTD SPRINKLER HEAD
- WALL MTD SPRINKLER HEAD
- RETURN OUTLET CLG DIFFUSER
- SUPPLY OUTLET CLG DIFFUSER
- LINEAR SUPPLY DIFFUSER
- WIRELESS ALARM ANTENNA/ TRANSMITTER
- TELEVISION OUTLET

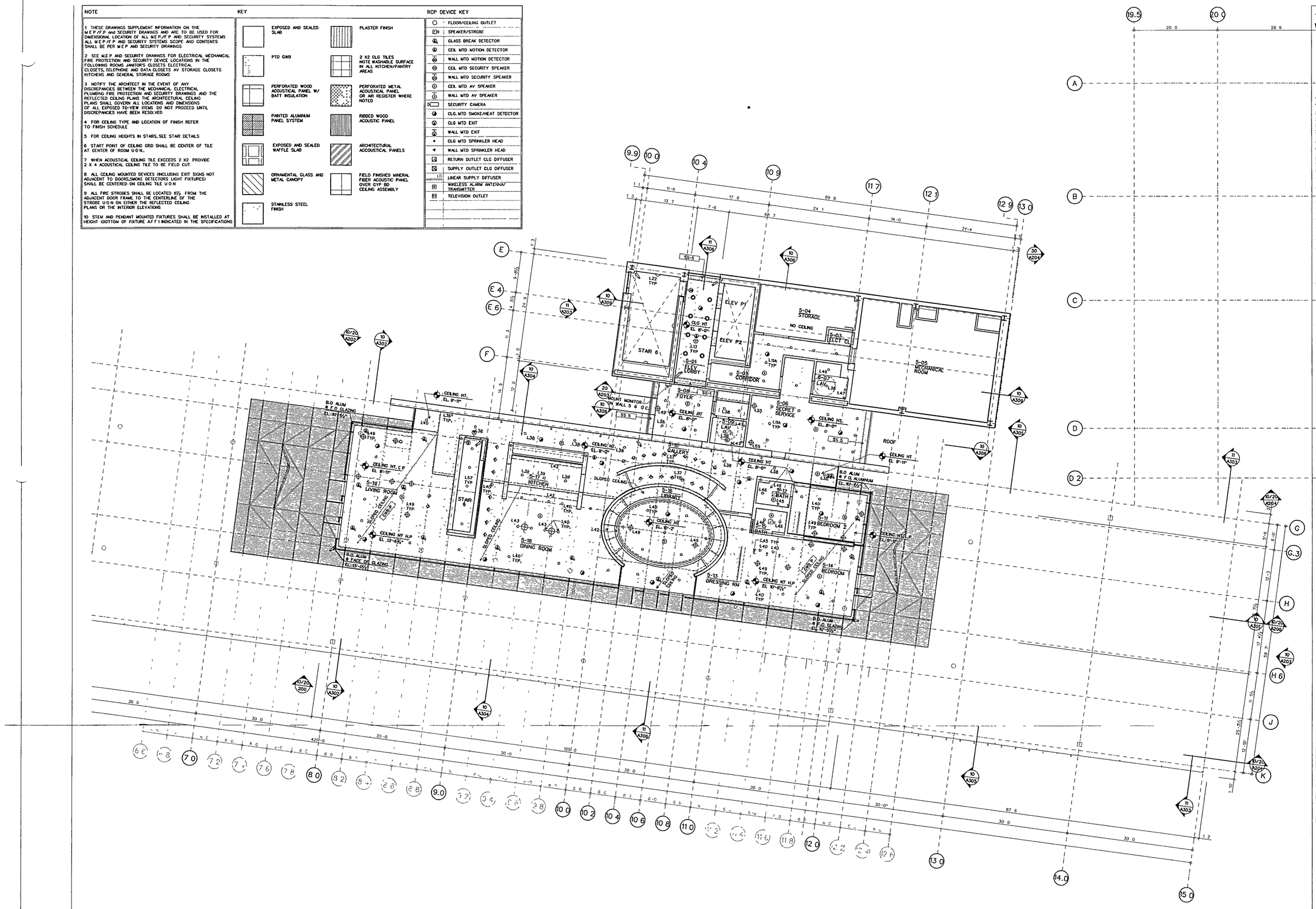

EXECUTIVE LEVEL REFLECTED CEILING PLAN

SCALE 1/8" = 1'-0"

AFP-05 DGN

10

WILLIAM J CLINTON PRESIDENTIAL CENTER

LITTLE ROCK, ARKANSAS

Architect

POLSHEK PARTNERSHIP LLP
320 West 13th Street
New York, New York 10014
212.807 7171

Coordinating Architects

POLK STANLEY YEARY ARCHITECTS Ltd
700 South Schiller Street
Little Rock, Arkansas 72201
501 378 0878

WITSELL EVANS RASCO
601 West Third Street
Little Rock, Arkansas 72201
501 374 5300

WOODS CARADINE ARCHITECTS
2200 South Main Street
Little Rock, Arkansas 72206
501 374 4060

Landscape Architects

HARGREAVES ASSOCIATES
118 Magazine Street
Cambridge Massachusetts 02139
617 661 0070

LANDSCAPE ARCHITECTURE, Inc.
2300 Cottondale Lane Suite 202
Little Rock, Arkansas 72202
501 374 5610

Structural Engineer

LESLIE E. ROBERTSON ASSOC , RLLP
30 Broad Street, 47th Floor
New York, New York 10004
212.750 9000

MEP Engineers

FLACK + KURTZ Inc.
475 Fifth Avenue
New York, New York 10017
212.532.9600

CROMWELL ARCHITECTS ENGINEERS
101 South Spring Street
Little Rock, Arkansas 72201
501 372.2900

Curtainwall Consultant

R A. HEINTGES ARCHITECTS
126 Fifth Avenue, 9th Floor
New York, New York 10011
212.652-2966

Seal

RICHARD OLCOTT
REGISTERED ARCHITECT
3405
ARKANSAS

Issue	Date
100% Construction Documents	09/27/02
90% Progress Printing	08/30/02
100% Struct./ CD Progress	07/01/02
100% Steel & Concrete CD & Architectural CD Progress	05/15/02
100% Design Development	03/01/02

Job No 8908

Scale 1/8" = 1-0"

Date September 27, 2002

Title

EXECUTIVE LEVEL REFLECTED CEILING PLAN

Sheet No

A605b

FOR OFFICIAL USE ONLY

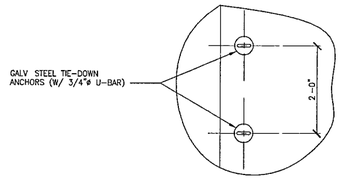

TIE-DOWN ANCHORS PLAN (7)

SCALE. 3/4 " = 1'-0"

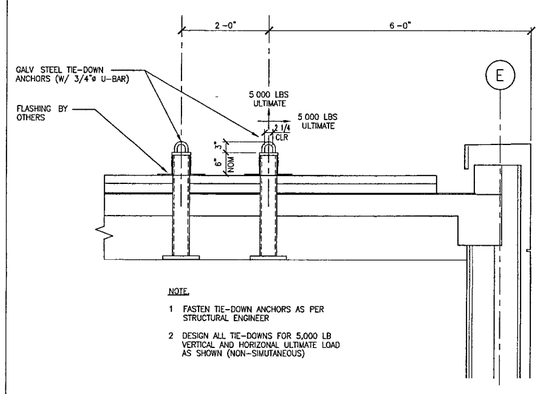

NOTE.

1 FASTEN TIE-DOWN ANCHORS AS PER STRUCTURAL ENGINEER

2 DESIGN ALL TIE-DOWNS FOR 5,000 LB VERTICAL AND HORIZONAL ULTIMATE LOAD AS SHOWN (NON-SIMUTANEOUS)

TIE-DOWN ANCHORS (6)

SCALE. 3/4 " = 1'-0"

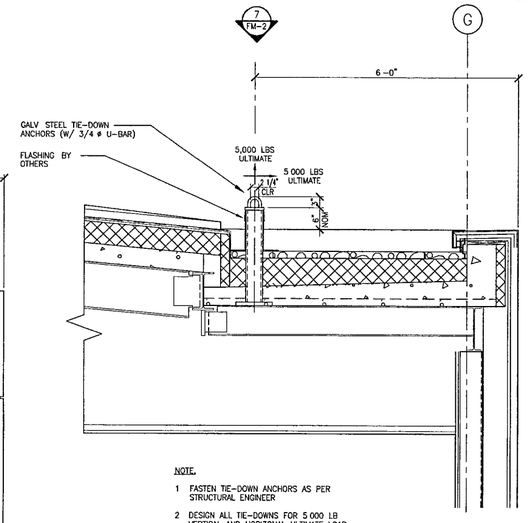

NOTE.

1 FASTEN TIE-DOWN ANCHORS AS PER STRUCTURAL ENGINEER

2 DESIGN ALL TIE-DOWNS FOR 5 000 LB VERTICAL AND HORIZONAL ULTIMATE LOAD AS SHOWN (NON-SIMUTANEOUS)

TIE-DOWN ANCHORS (5)

SCALE. 3/4 " = 1'-0"

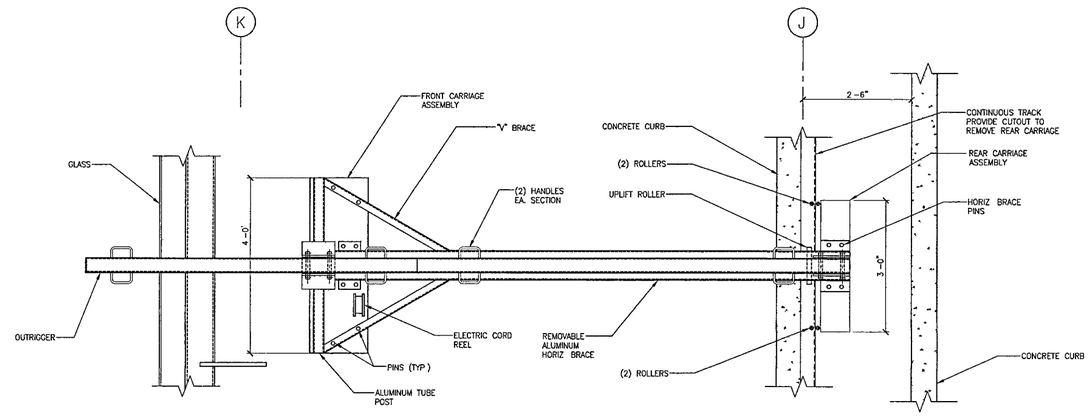

OUTRIGGER: DETAIL PLAN EAST-WEST LOOKING NORTH (4)

SCALE. 3/4 " = 1'-0"

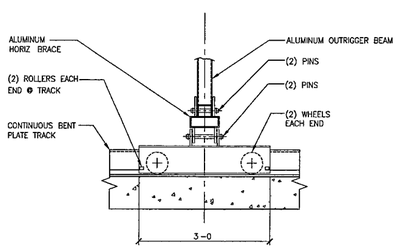

OUTRIGGER REAR CARRIAGE DETAIL (3)

SCALE. 3/4 " = 1'-0"

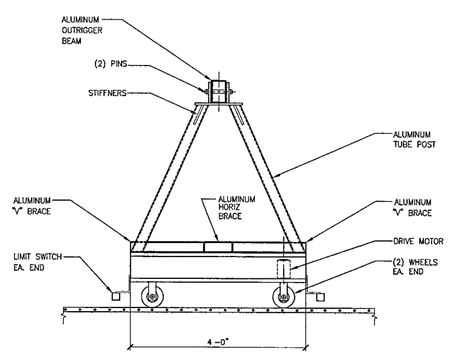

OUTRIGGER: FRONT CARRIAGE SECTION (2)

SCALE. 3/4 " = 1'-0"

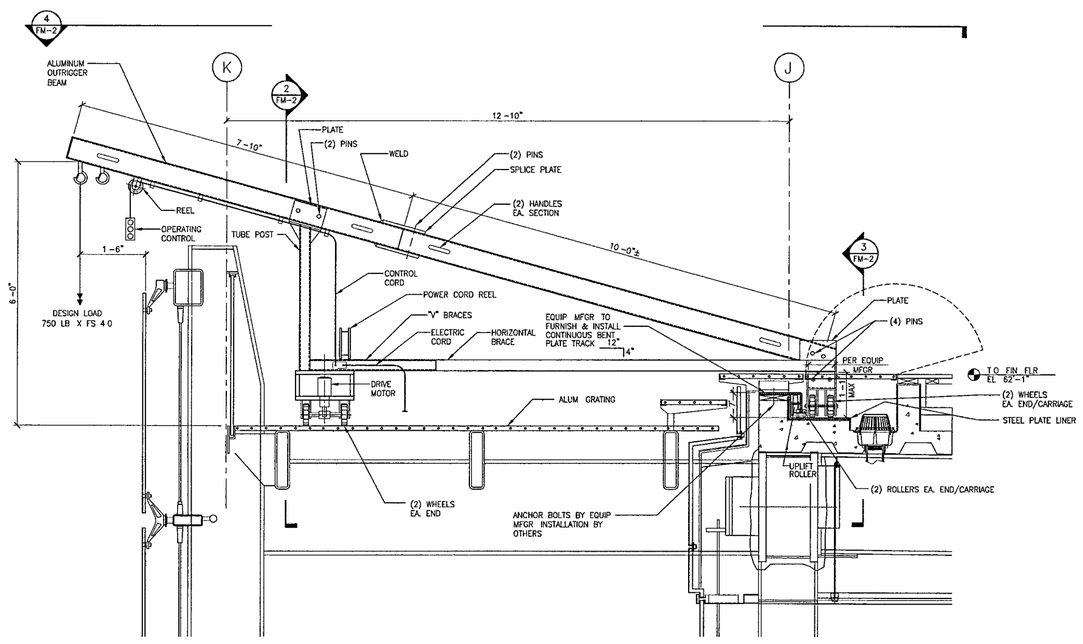

OUTRIGGER· DETAIL SECTION EAST-WEST LOOKING NORTH (1)

SCALE. 3/4 " = 1'-0"

GENERAL NOTES

1 THIS DRAWING DELINEATES A CONCEPTUAL EQUIPMENT INSTALLATION THE FINAL DESIGN WILL BE PREPARED BY THE EQUIPMENT SUPPLIER WHO WILL BE RESPONSIBLE FOR THE DESIGN SIZES, MANUFACTURE, COMPATIBILITY AND INSTALLATION

2 ALL CONNECTION PINS BOLTS, ETC TO BE STAINLESS STEEL

3 ALL CARRIAGE STRUCTURAL MEMBERS, CARRIAGE COMPONENTS ETC TO BE STAINLESS STEEL OR HOT DIPPED GALVANIZED STEEL

4 CARRIAGE WHEELS TO BE PNEUMATIC TIRES OR NEOPRENE COVERED STEEL WHEELS WITH PERMANENTLY LUBRICATED ROLLER BEARINGS

5 ELECTRIC DRIVE TO BE SINGLE PHASE, 120 VOLTS AMPERAGE TO BE PROVIDED BY EQUIPMENT MANUFACTURER CONTROL CIRCUIT TO BE LOW VOLTAGE

ELECTRIC OUTLETS SHOWN THUS φ

EE No. 02P-009

WILLIAM J CLINTON PRESIDENTIAL CENTER

LITTLE ROCK ARKANSAS

Architect

POLSHEK PARTNERSHIP LLP
320 West 13th Street
New York, New York 10014
212 807 7171

Coordinating Architects

POLK STANLEY YEARY ARCHITECTS Ltd
700 South Schiller Street
Little Rock, Arkansas 72201
501 378 0878

WITSELL EVANS RASCO
901 West Third Street
Little Rock Arkansas 72201
501 374 5300

WOODS CARADINE ARCHITECTS
2200 South Main Street
Little Rock Arkansas 72206
501 374 4060

Landscape Architects

HARGREAVES ASSOCIATES
118 Magazine Street
Cambridge Massachusettes 02139
617 661 0070

LANDSCAPE ARCHITECTURE Inc
2300 Cottondale Lane Suite 202
Little Rock Arkansas 72202
501 374 5610

Structural Engineer

LESLIE E ROBERTSON ASSOC RLLP
30 Broad Street, 47th Floor
New York, New York 10004
212 750 9000

MEP Engineers

FLACK + KURTZ Inc
475 Fifth Avenue
New York, New York 10017
212 532 9600

CROMWELL ARCHITECTS ENGINEERS
101 South Spring Street
Little Rock, Arkansas 72201
501 372 2900

Curtainwall Consultant

R A HEINTGES ARCHITECTS
126 Fifth Avenue, 9th Floor
New York, New York 10011
212 652-2966

Seal

Issue	Date
100% Construction Documents	09/27/02
90% Progress Printing	08/30/02
100% Struct / CD Progress	07/01/02

Job No 9908

Scale NOTED

Date September 27 2002

Title

FACADE MAINTENANCE SYSTEM SECTIONS & DETAILS

Sheet No

FM-2

FOR OFFICIAL USE ONLY

GENERAL NOTES

1 THIS DRAWING DELINEATES A CONCEPTUAL EQUIPMENT INSTALLATION THE FINAL DESIGN WILL BE PREPARED BY THE EQUIPMENT SUPPLIER WHO WILL BE RESPONSIBLE FOR THE DESIGN, SIZES, MANUFACTURE COMPATIBILITY AND INSTALLATION

2 ALL CONNECTION PINS, BOLTS ETC TO BE STAINLESS STEEL.

3 ALL CARRIAGE STRUCTURAL MEMBERS CARRIAGE COMPONENTS, ETC TO BE STAINLESS STEEL OR HOT DIPPED GALVANIZED STEEL.

4 CARRIAGE WHEELS TO BE PNEUMATIC TIRES OR NEOPRENE COVERED STEEL WHEELS WITH PERMANENTLY LUBRICATED ROLLER BEARINGS

5 ELECTRIC DRIVE TO BE SINGLE PHASE, 120 VOLTS AMPERAGE TO BE PROVIDED BY EQUIPMENT MANUFACTURER CONTROL CIRCUIT TO BE LOW VOLTAGE

ELECTRIC OUTLETS SHOWN THUS

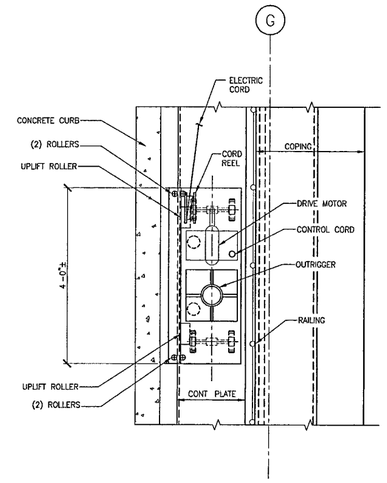

OUTRIGGER· DETAIL PLAN EAST–WEST LOOKING NORTH (10)

SCALE. 3/4 " = 1'–0"

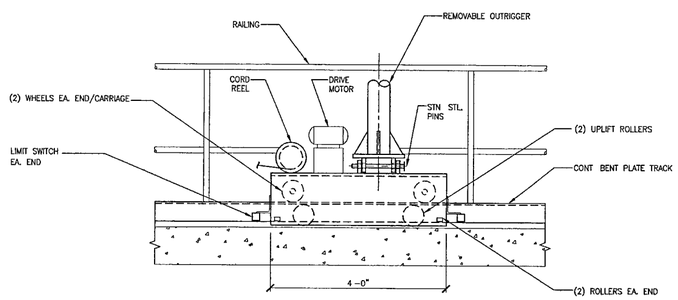

OUTRIGGER: REAR CARRIAGE DETAIL (9)

SCALE. 3/4 " = 1'–0"

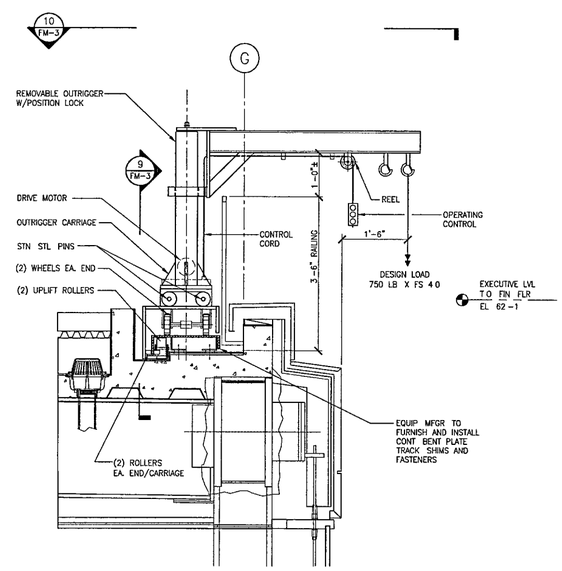

OUTRIGGER. DETAIL SECTION EAST–WEST LOOKING NORTH (8)

SCALE. 3/4 " = 1'–0"

WILLIAM J CLINTON PRESIDENTIAL CENTER

LITTLE ROCK, ARKANSAS

Architect

POLSHEK PARTNERSHIP LLP
320 West 13th Street
New York, New York 10014
212 807 7171

Coordinating Architects

POLK STANLEY YEARY ARCHITECTS Ltd
700 South Schiller Street
Little Rock, Arkansas 72201
501 378 0878

WITSELL EVANS RASCO
901 West Third Street
Little Rock Arkansas 72201
501 374 5300

WOODS CARADINE ARCHITECTS
2200 South Main Street
Little Rock Arkansas 72206
501 374 4060

Landscape Architects

HARGREAVES ASSOCIATES
118 Magazine Street
Cambridge Massachusetts 02139
617 661 0070

LANDSCAPE ARCHITECTURE, Inc
2300 Cottondale Lane Suite 202
Little Rock, Arkansas 72202
501 374 5610

Structural Engineer

LESLIE E ROBERTSON ASSOC , RLLP
30 Broad Street, 47th Floor
New York, New York 10004
212 750 9000

MEP Engineers

FLACK + KURTZ Inc
475 Fifth Avenue
New York New York 10017
212 532 9600

CROMWELL ARCHITECTS ENGINEERS
101 South Spring Street
Little Rock Arkansas 72201
501 372 2900

Curtainwall Consultant

R A HEINTGES ARCHITECTS
126 Fifth Avenue 9th Floor
New York, New York 10011
212 652-2966

Seal

Issue	Date
100% Construction Documents	09/27/02
90% Progress Printing	08/30/02
100% Struct / CD Progress	07/01/02

Job No 9908

Scale NOTED

Date September 27, 2002

Title FACADE MAINTENANCE SYSTEM SECTIONS & DETAILS

Sheet No FM-3

EE No. 02P-009

FOR OFFICIAL USE ONLY