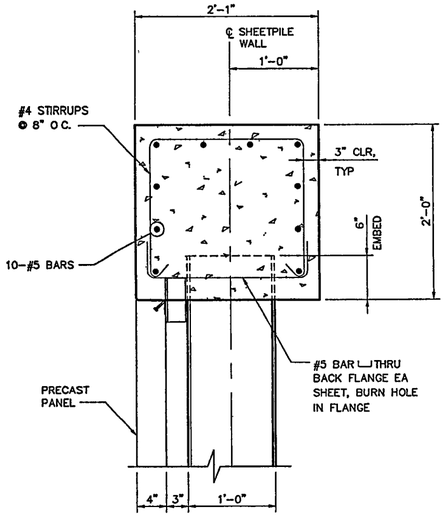

A MC516 SECTION
1 1/2"=1'-0"

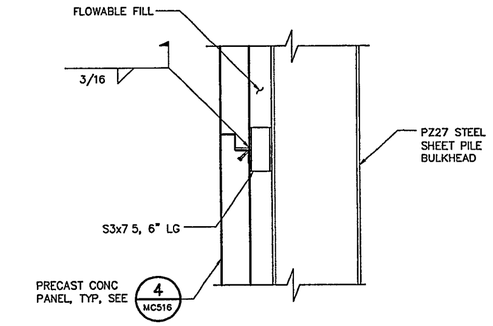

SECTION

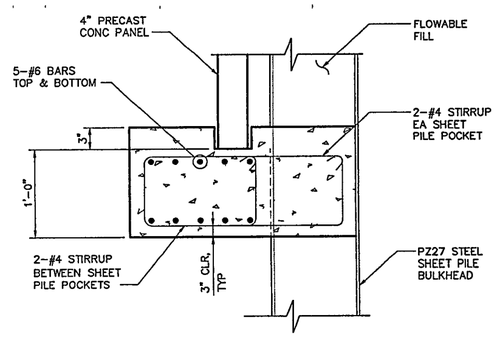

SECTION

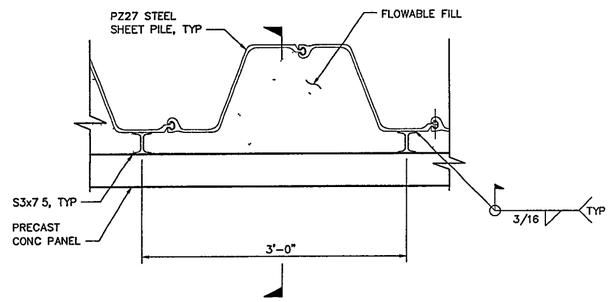

PLAN

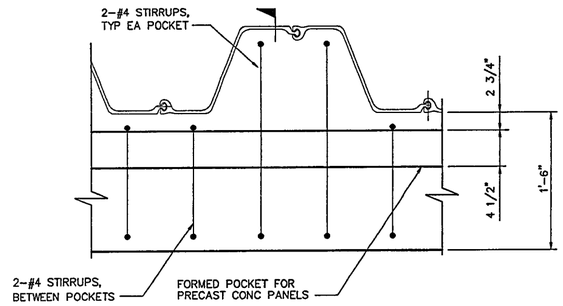

PLAN

1 MC516 PRECAST ATTACHMENT TO BULKHEAD DETAIL
1 1/2"=1'-0"

2 MC516 PRECAST WALL PANEL FOOTING DETAIL
1 1/2"=1'-0"

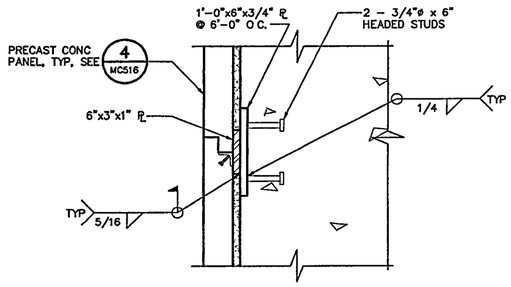

3 MC516 PRECAST ATTACHMENT TO CONCRETE WALL DETAIL
1 1/2"=1'-0"

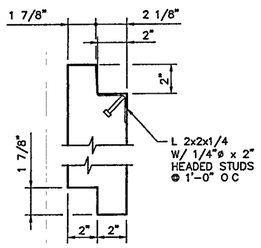

NOTES

1. PRECAST PANEL DIMENSIONS AND FRONT FACE FINISH TO MATCH PRECAST PANELS AT LIBRARY BUILDING.
2. BOTTOM OF BOTTOM PRECAST SECTION THAT IS TO SIT ON FOOTING SHALL BE CAST WITHOUT NOTCH
3. TOP OF TOP PRECAST AT CONCRETE CAP SHALL BE CAST WITHOUT NOTCH HAVING THE 2x2x1/4 ANGLE WITH 1/4"ø x 2" HEADED STUDS CAST INTO TOP INSIDE CORNER

4 MC516 PRECAST PANEL DETAIL
3"=1'-0"

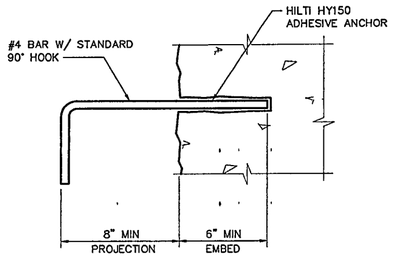

NOTE

SPACE ROWS OF ADHESIVE ANCHORED DOWELS AT 2'-0" VERTICALLY.

5 MC516 PRECAST PANEL DETAIL
3"=1'-0"

WILLIAM J. CLINTON PRESIDENTIAL CENTER & PARK

LITTLE ROCK, ARKANSAS

Architect
POLSHEK PARTNERSHIP LLP
320 West 13th Street
New York, New York 10014
212 807 7171

Landscape Architect
Hargreaves Associates
Cambridge San Francisco
118 Magazine Street
Cambridge, Massachussetts 02139
617 661 0070 t
617 661 0064 f

Coordinating Landscape Architect
LANDSCAPE ARCHITECTURE, INC
2300 Cottondale Lane, Suite 202
Little Rock, Arkansas 72202
501 374 5610

Civil Engineer
McCLELLAND CONSULTING ENGINEERS
900 W Markham Street
Little Rock, Arkansas 72201
501 371 0272

Electrical Engineer
CROMWELL ARCHITECTS ENGINEERS
101 South Spring Street
Little Rock, Arkansas 72201
501 372.2900

Marine + Structural Engineers
MOFFATT & NICHOL ENGINEERS
1616 East Millbrook Road, Suite 160
Raleigh, North Carolina 27609
919 781.4626

Fountain
DAN EUSER WATERARCHITECTURE INC.
58 Mackenzie Drive West
Richmond Hill, Ontario L4C 3S2
CANADA
905 884.4178

Playground Design
PLAY SITE ARCHITECTURE
7 Fairway Road
Acton, Massachussetts 01720
978 263 1090

Signage Design
POULIN + MORRIS
288 Spring Street, 5bth Floor
New York, New York 10013
212.675 1332

Seal

STATE OF ARKANSAS REGISTERED PROFESSIONAL ENGINEER No. 10011 JEFFREY G. SHEPHERD

Issue		Date
03	100% Site Package 2 CD	09/27/02
02	90% Site Package 2 CD	08/16/02
01	50% Site Package 2 CD	06/28/02

Job No 4813

Scale AS SHOWN

Date SEPTEMBER 27, 2002

Title SITE PACKAGE 2
100% CONSTRUCTION DOCUMENTS
Amphitheater Wall Details

Sheet No. MC516

FOR OFFICIAL USE ONLY