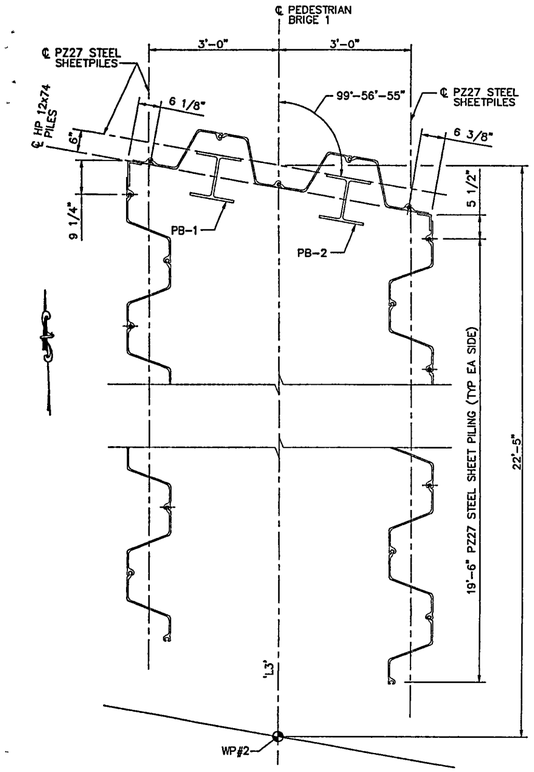

NOTE:
FOR BULKHEAD WALKWAY DETAIL SEE 1/MC505

1/MC503 BULKHEAD PEDESTRIAN BRIDGE 1 PLAN
3/4" = 1'-0"

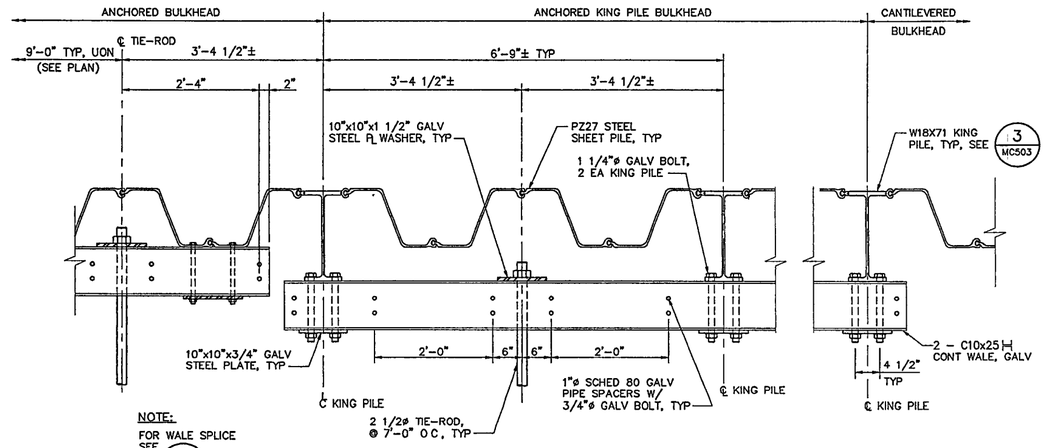

NOTE:
FOR WALE SPLICE SEE 8/MC503

2/MC503 ANCHORED KING PILE BULKHEAD WALE DETAIL
1" = 1'-0"

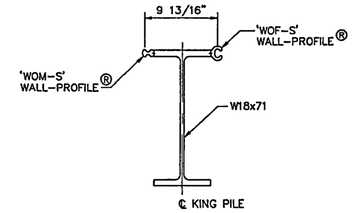

NOTES

1. WELD KING PILE BALL & SOCKET ATTACHMENTS PER MANUFACTURER'S RECOMMENDATIONS
2. IF KING PILE IS PRODUCED WITH APPROVED EQUIVALENT BALL & SOCKET ATTACHMENTS, THE 6'-9"± DIMENSION BETWEEN KING PILES SHALL BE MAINTAINED THE W-SHAPE SHALL HAVE A MINIMUM SECTION MODULUS OF $127 in^3$ AND A MINIMUM DEPTH OF 14 in
3. 'WOM-S' AND 'WOF-S' WALL-PROFILES® ARE AS SUPPLIED BY PILEPRO LLC OR APPROVED EQUAL.
4. SEE SHEET MC517 FOR PILE SCHEDULE

3/MC503 KING PILE DETAIL
1 1/2" = 1'-0"

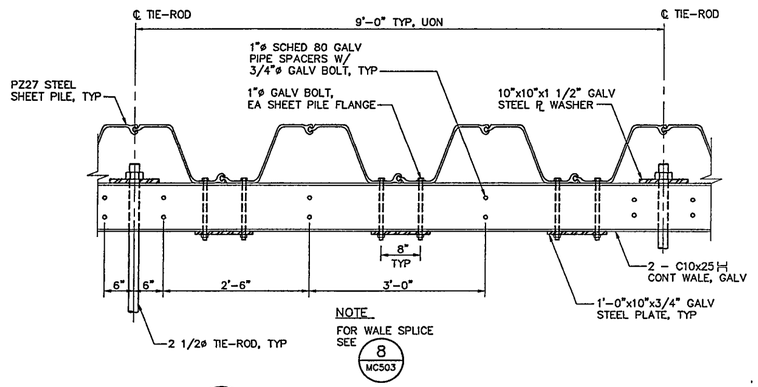

NOTE
FOR WALE SPLICE SEE 8/MC503

4/MC503 ANCHORED BULKHEAD WALE DETAIL
1" = 1'-0"

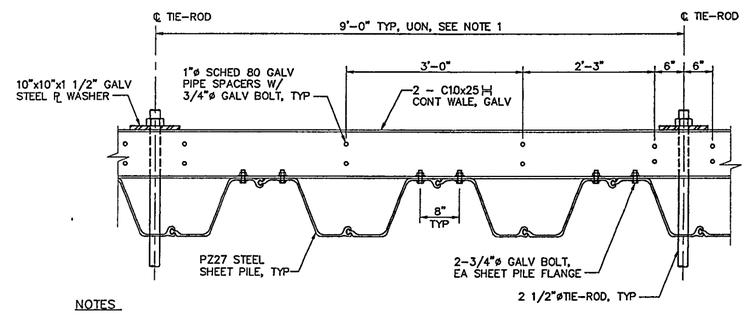

NOTES

1 TIE-ROD SPACING AT ANCHORED KING PILE BULKHEAD WILL BE 6'-9" SO THAT TIE-RODS PENETRATE DEADMAN AT SHEETPILE FLANGE.

2 FOR WALE SPLICE SEE 8/MC503

5/MC503 DEADMAN WALE DETAIL
1" = 1'-0"

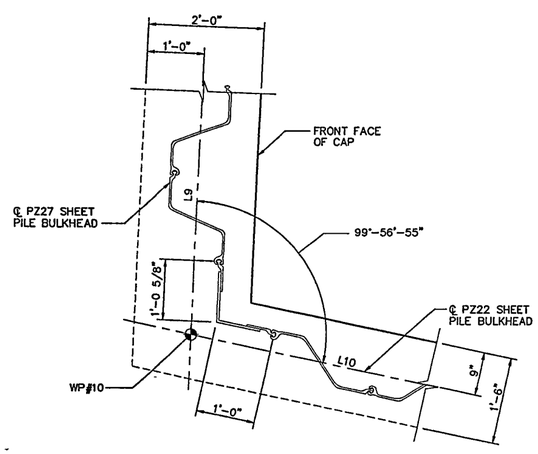

6/MC503 CORNER DETAIL
1" = 1'-0"

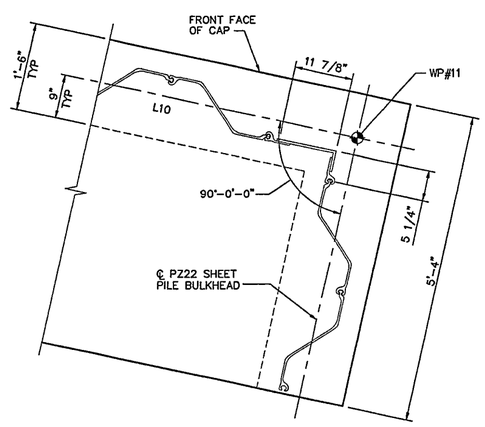

7/MC503 BULKHEAD RETURN DETAIL
1" = 1'-0"

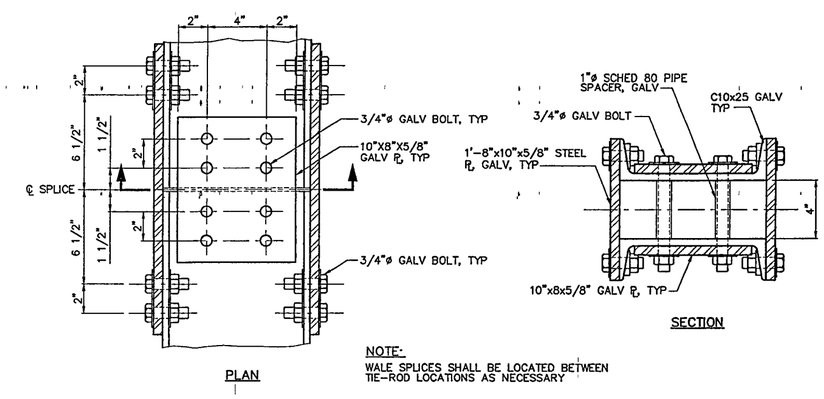

NOTE:
WALE SPLICES SHALL BE LOCATED BETWEEN TIE-ROD LOCATIONS AS NECESSARY

8/MC503 WALE SPLICE DETAIL
3" = 1'-0"

WILLIAM J. CLINTON PRESIDENTIAL CENTER & PARK

LITTLE ROCK, ARKANSAS

Architect
POLSHEK PARTNERSHIP LLP
320 West 13th Street
New York, New York 10014
212.807 7171

Landscape Architect
Hargreaves Associates
Cambridge San Francisco
118 Magazine Street
Cambridge, Massachusetts 02139
617 661.0070 t
617 661 0064 f

Coordinating Landscape Architect
LANDSCAPE ARCHITECTURE, INC
2300 Cottondale Lane, Suite 202
Little Rock, Arkansas 72202
501 374.5610

Civil Engineer
McCLELLAND CONSULTING ENGINEERS
900 W Markham Street
Little Rock, Arkansas 72201
501 371 0272

Electrical Engineer
CROMWELL ARCHITECTS ENGINEERS
101 South Spring Street
Little Rock, Arkansas 72201
501 372.2900

Marine + Structural Engineers
MOFFATT & NICHOL ENGINEERS
1616 East Millbrook Road, Suite 160
Raleigh, North Carolina 27609
919 781.4626

Fountain
DAN EUSER WATERARCHITECTURE INC.
58 Mackenzie Drive West
Richmond Hill, Ontario L4C 3S2
CANADA
905 884.4176

Playground Design
PLAY SITE ARCHITECTURE
7 Fairway Road
Acton, Massachussetts 01720
978.263 1050

Signage Design
POULIN + MORRIS
288 Spring Street, Sixth Floor
New York, New York 10013
212.675 1332

Seal

Issue		Date
03	100% Site Package 2 CD	09/27/02
02	90% Site Package 2 CD	08/16/02
01	60% Site Package 2 CD	06/29/02

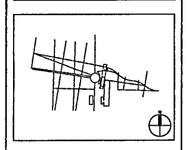

Job No 4813
Scale AS SHOWN
Date SEPTEMBER 27, 2002
Title SITE PACKAGE 2
100% CONSTRUCTION DOCUMENTS
Bulkhead Details
Sheet 2 of 2
Sheet No. MC503

FOR OFFICIAL USE ONLY

125