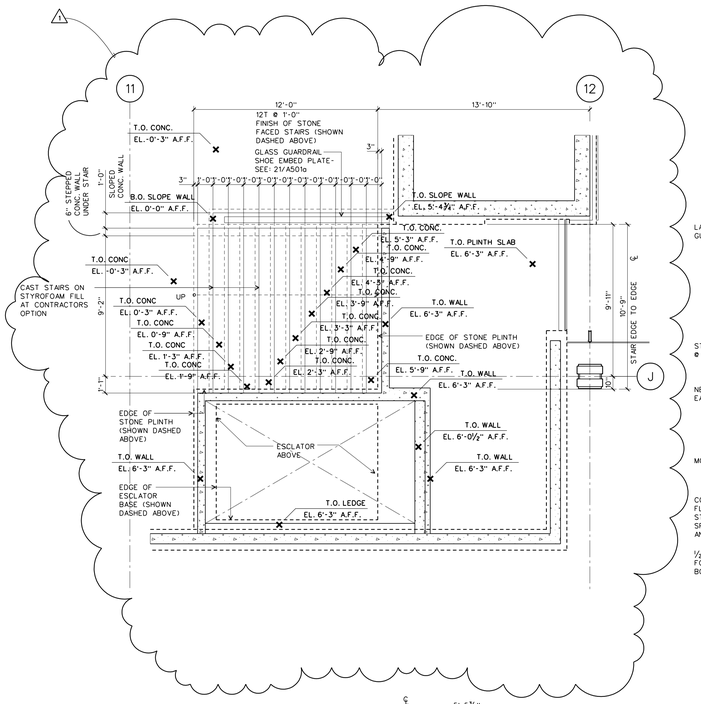

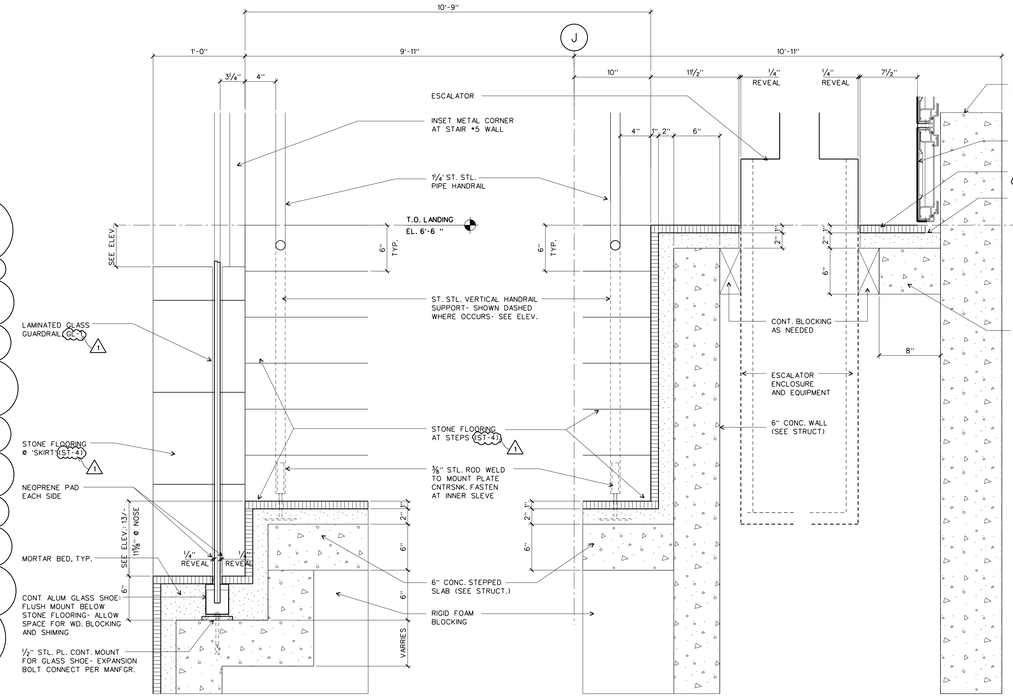

STAIR 7: SECTION THRU SKIRT / GUARDRAIL (21)

SCALE: 1½" =1'-0"

STAIR 7 : SECTION THRU ESCALATOR PLAT. (20)

SCALE: 1½" =1'-0"

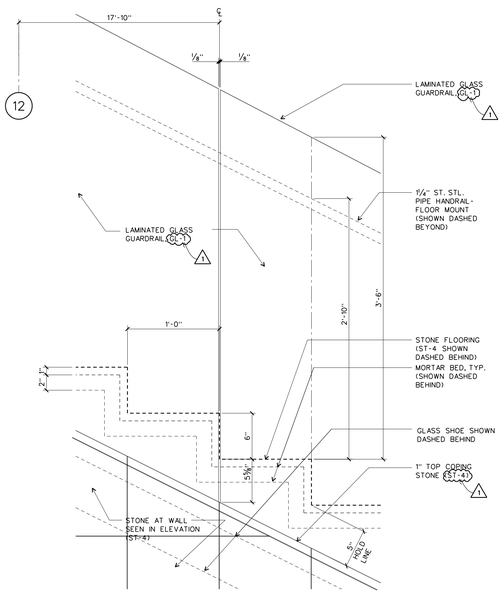

STAIR 7 : ENLARGED ELEVATION (13)

SCALE: 1½" =1'-0"

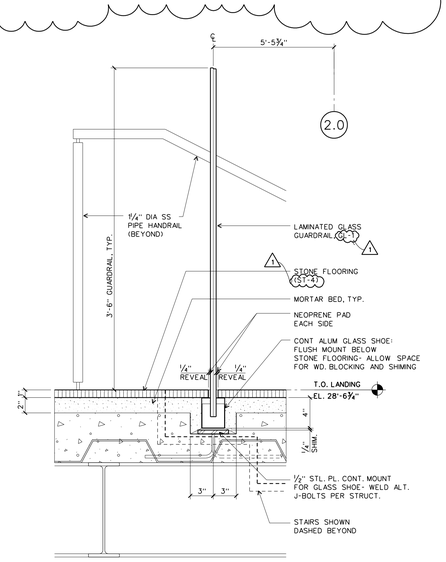

STAIR 1: GLASS RAIL AT LANDING (12)

SCALE: 1½" =1'-0"

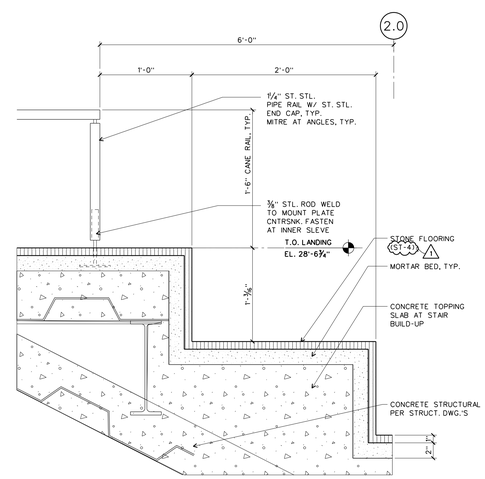

STAIR 1: STADIUM SEATING (11)

SCALE: 1½" =1'-0"

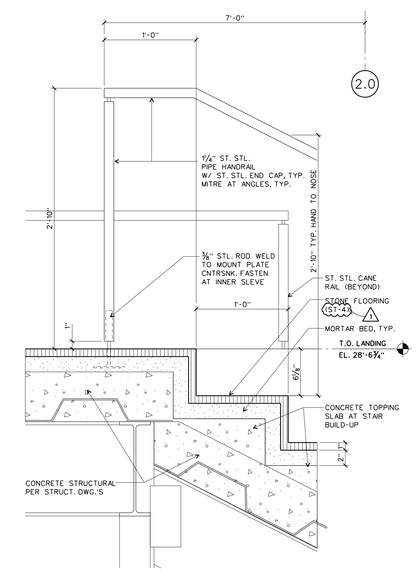

STAIR 1 (STAIR 7 SIM.): PLAN AT LANDING (10)

SCALE: 1½" =1'-0"

WILLIAM J. CLINTON PRESIDENTIAL CENTER

LITTLE ROCK, ARKANSAS

Architect

POLSHEK PARTNERSHIP LLP
320 West 13th Street
New York, New York 10014
212.807.7171

Coordinating Architects

POLK STANLEY YEARY ARCHITECTS Ltd
700 South Schiller Street
Little Rock, Arkansas 72201
501.378.0878

WITSELL EVANS RASCO
901 West Third Street
Little Rock, Arkansas 72201
501.374.5300

WOODS CARADINE ARCHITECTS
2200 South Main Street
Little Rock, Arkansas 72206
501.374.4060

Landscape Architects

HARGREAVES ASSOCIATES
118 Magazine Street
Cambridge, Massachusettes 02139
617.661.0070

LANDSCAPE ARCHITECTURE, Inc.
2300 Cottondale Lane Suite 202
Little Rock, Arkansas 72202
501.374.5610

Structural Engineer

LESLIE E. ROBERTSON ASSOC., RLLP
30 Broad Street, 47th Floor
New York, New York 10004
212.750.9000

MEP Engineers

FLACK + KURTZ Inc.
475 Fifth Avenue
New York, New York 10017
212.532.9600

CROMWELL ARCHITECTS ENGINEERS
101 South Spring Street
Little Rock, Arkansas 72201
501.372.2900

Curtainwall Consultant

R. A. HEINTGES ARCHITECTS
126 Fifth Avenue, 9th Floor
New York, New York 10011
212.652-2966

Seal

Issue	Date
1 Addendum #2	11/15/02
100% Construction Documents	09/27/02

Job No. 9908

Scale 1 1/2" = 1'-0"

Date September 27, 2002

Title

MUSEUM BUILDING
ORNAMENTAL STAIR:
DETAILS

Sheet No.

A501a

FOR OFFICIAL USE ONLY