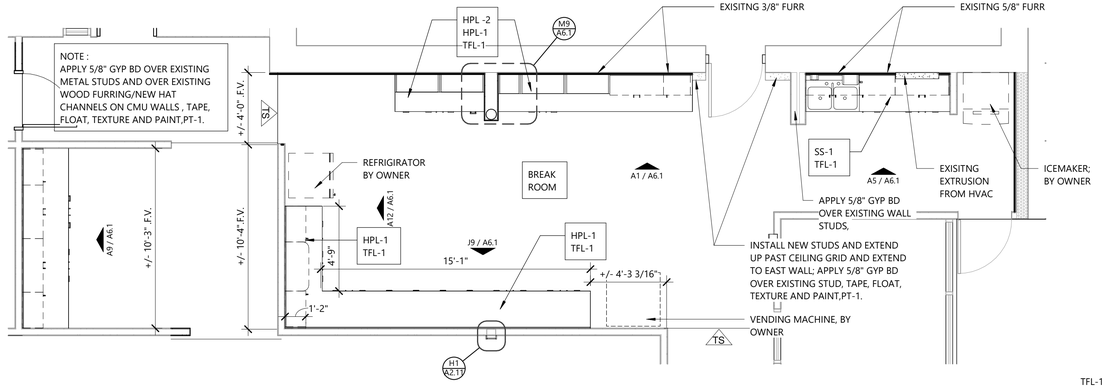

K1 First Floor Plan
1/4" = 1'-0"
Ref: A2/ A2.12

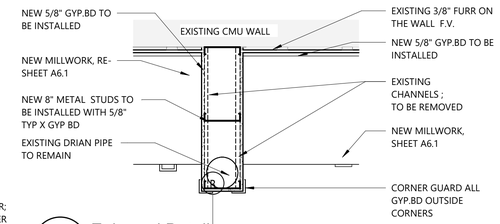

M9 Enlarged Detail
3/4" = 1'-0"
Ref: K1/ A6.1

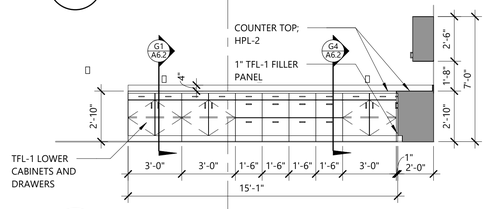

J9 Millwork Elevations
1/4" = 1'-0"
Ref: K1/ A6.1

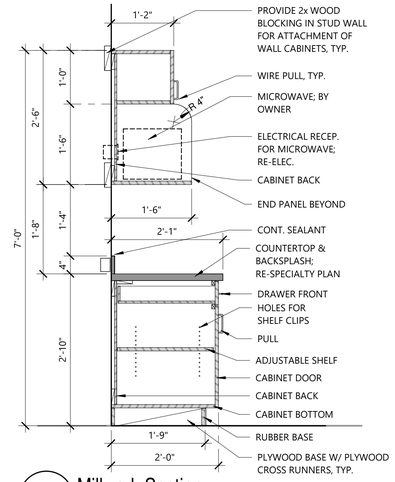

J13 Millwork Section
3/4" = 1'-0"
Ref: A12/ A6.1

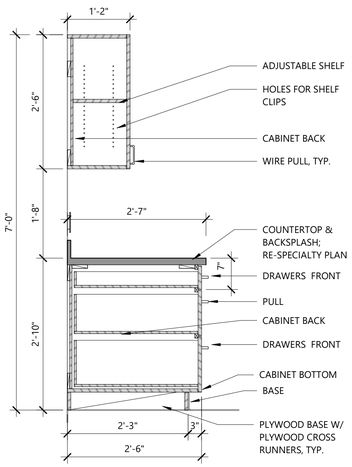

E1 Millwork Section
3/4" = 1'-0"
Ref: A9/ A6.1

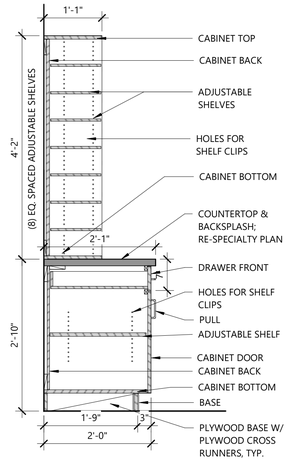

E3 Millwork Section
3/4" = 1'-0"
Ref: A1/ A6.1

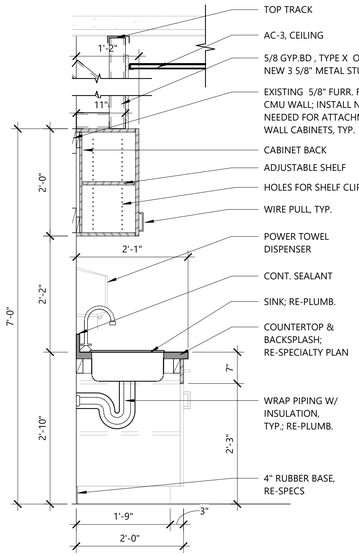

E6 Millwork Section
3/4" = 1'-0"
Ref: A5/ A6.1

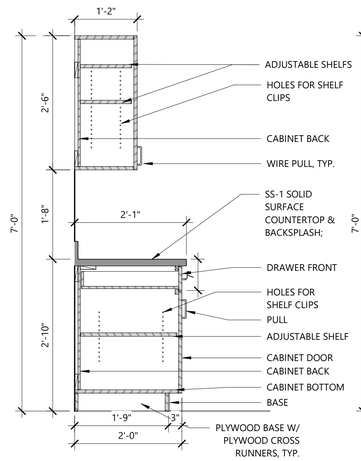

E9 Millwork Section
3/4" = 1'-0"
Ref: A12/ A6.1

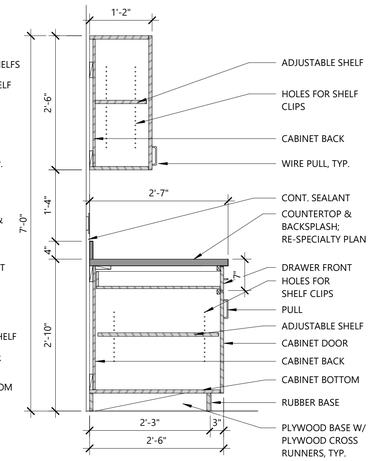

E11 Millwork Section
3/4" = 1'-0"
Ref: A9/ A6.1

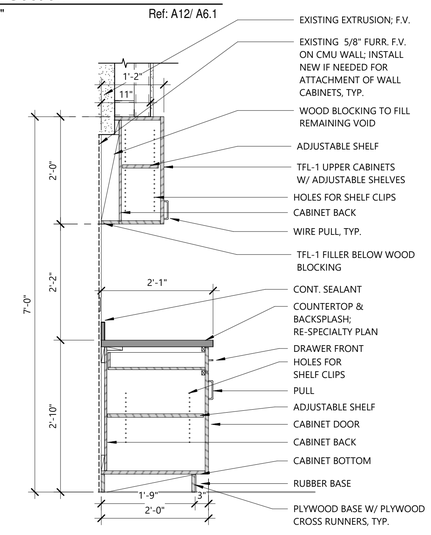

E14 Millwork Section
3/4" = 1'-0"
Ref: A5/ A6.1

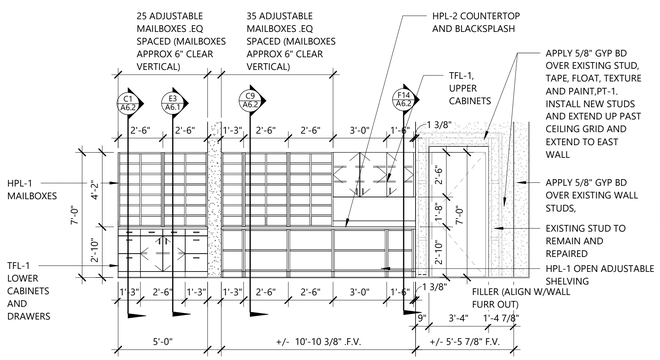

A1 Millwork Elevations
1/4" = 1'-0"
Ref: K1/ A6.1

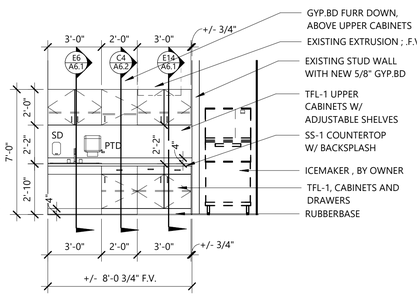

A5 Millwork Elevations
1/4" = 1'-0"
Ref: K1/ A6.1

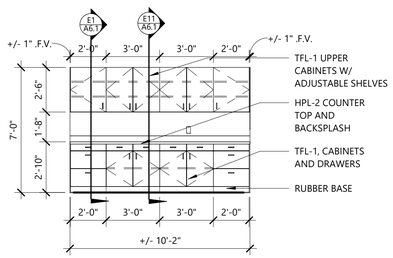

A9 Millwork Elevations
1/4" = 1'-0"
Ref: K1/ A6.1

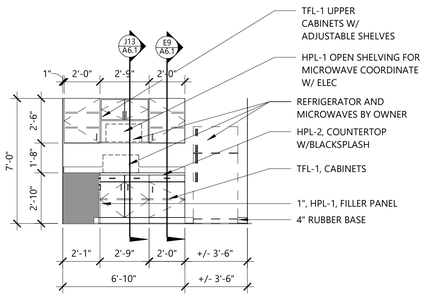

A12 Millwork Elevations
1/4" = 1'-0"
Ref: K1/ A6.1

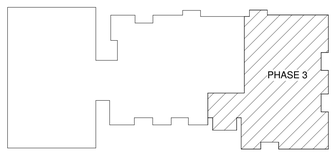

KEYPLAN

HIGHT . JACKSON . ASSOCIATES, P.A
REGISTERED ARCHITECTS
Certificate C 349
ARKANSAS

REGISTERED ARCHITECT
SHAWN DEHOZORGA
License Number 9033
STATE OF ARKANSAS

Hight Jackson ASSOCIATES
5201 W Village Parkway, Suite 300 I Rogers, Arkansas 72758 I (479) 464-4965 I www.hjarch.com

A RESTORATION FOR
RPS Administration Building
500 W Walnut St, Rogers AR 72756

DRAWN BY: MS
CHECK BY: MM
ISSUE DATE: 11/25/2025
PROJECT NO. 2534
REVISION DATES 12/17/2025

PHASE 3 - MILLWORK ELEVATIONS / DETAILS
S H E E T
A6.1

COPYRIGHT 2025
THESE DRAWINGS AND SPECIFICATIONS ARE THE EXCLUSIVE PROPERTY OF HIGHT JACKSON ASSOCIATES PA. USE OR REPRODUCTION IS PROHIBITED WITHOUT WRITTEN CONSENT