NOTES:
1. A MANHOLE BARREL CONSTRUCTION JOINT IS ALLOWED WITHIN A STRAIGHT WALL SEGMENT OF THE BARREL AT 12–FOOT ABOVE THE MANHOLE BASE AND SHALL HAVE A KEY WAY AND #4 REBAR AT 12–INCH ON CENTERS WITH 15" EMBEDMENT. A WATER STOP SHALL BE USED IF DIRECTED BY THE UTILITY.
2. THE BASE AND WALLS SHALL BE POURED MONOLITHICALLY.
3. THE CENTERLINE OF ALL PIPES ENTERING AND LEAVING MANHOLE SHALL PASS THROUGH THE CENTER OF THE MANHOLE.
4. MANHOLES THAT ARE LESS THAN 12' 6" IN DEPTH SHALL BE INDIVIDUALLY DESIGNED PER LOCATION CONDITIONS AND MUST BE APPROVED BY THE UTILITY.
5. POUR OUTSIDE MANHOLE BASE SO THAT THE TOP OF OUTSIDE BASE IS EVEN OR 2–INCH ABOVE THE CROWN OF THE PIPES ENTERING THE MANHOLE BASE. EXTEND MANHOLE BASE TO THE NEAT EXCAVATION IN ALL DIRECTIONS 24" MINIMUM.
6. CONSTRUCT FLOW CHANNEL FOR ALL PIPES ENTERING MANHOLE, INCLUDING SERVICES. SLOPE CHANNELS TO MATCH PIPE INVERTS.
7. THE TOP OF MANHOLE TO BE LEVEL WITH FINISHED GRADE, UNLESS OTHERWISE NOTED OR DIRECTED BY THE UTILITY.
8. BRUSH FINISH SURFACES OF CONCRETE AND REMOVE ALL SHARP EDGES.

NOTES:
1. THE UTILITY MUST APPROVE THE USE OF A DROP MANHOLE AND IF APPROVED, THE DROP MANHOLE ASSEMBLY IS ONLY ALLOWED IN THE 6–FOOT BARREL SECTION.
2. THE SEWER SERVICE PIPE CROWN ELEVATION ENTERING THE MANHOLE SHALL MATCH THE PIPE CROWN ELEVATION OF THE ENTERING SEWER MAIN.

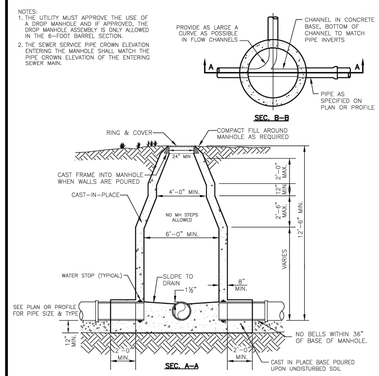

6 FT. CAST–IN–PLACE SANITARY SEWER MANHOLE DETAIL
N.T.S.
SD–1 1
REV. 01/2022

NOTES:
1. A MANHOLE BARREL CONSTRUCTION JOINT IS ALLOWED WITHIN A STRAIGHT WALL SEGMENT OF THE BARREL AT 12–FOOT ABOVE THE MANHOLE BASE AND SHALL HAVE A KEY WAY AND #4 REBAR AT 12–INCH ON CENTERS WITH 15" EMBEDMENT. A WATER STOP SHALL BE USED IF DIRECTED BY THE UTILITY.
2. THE BASE AND WALLS SHALL BE POURED MONOLITHICALLY.
3. THE CENTERLINE OF ALL PIPES ENTERING AND LEAVING MANHOLE SHALL PASS THROUGH THE CENTER OF THE MANHOLE.
4. MANHOLES THAT ARE LESS THAN 4–FOOT IN DEPTH SHALL BE INDIVIDUALLY DESIGNED PER LOCATION CONDITIONS AND MUST BE APPROVED BY THE UTILITY.
5. POUR OUTSIDE MANHOLE BASE SO THAT THE TOP OF OUTSIDE BASE IS EVEN OR 2–INCH ABOVE THE CROWN OF THE PIPES ENTERING THE MANHOLE BASE. EXTEND MANHOLE BASE TO THE NEAT EXCAVATION IN ALL DIRECTIONS 24" MINIMUM.
6. CONSTRUCT FLOW CHANNEL FOR ALL PIPES ENTERING MANHOLE, INCLUDING SERVICES. SLOPE CHANNELS TO MATCH PIPE INVERTS.
7. THE TOP OF MANHOLE TO BE LEVEL WITH FINISHED GRADE, UNLESS OTHERWISE NOTED OR DIRECTED BY THE UTILITY.
8. BRUSH FINISH SURFACES OF CONCRETE AND REMOVE ALL SHARP EDGES.

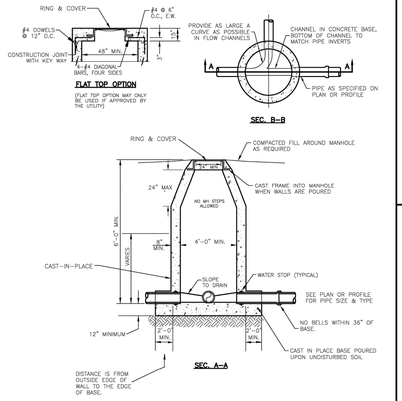

NOTES:
1. THE UTILITY MUST APPROVE THE USE OF A DROP MANHOLE AND IF APPROVED, THE DROP MANHOLE ASSEMBLY IS ONLY ALLOWED IN THE 4–FOOT BARREL SECTION.
2. THE SEWER SERVICE PIPE CROWN ELEVATION ENTERING THE MANHOLE SHALL MATCH THE PIPE CROWN ELEVATION OF THE ENTERING SEWER MAIN.

4 FT. CAST–IN–PLACE SANITARY SEWER MANHOLE DETAIL
N.T.S.
SD–1 2
REV. 05/2021

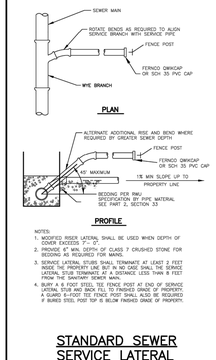

NOTES:
1. MODIFIED RISER LATERAL SHALL BE USED WHEN DEPTH OF COVER EXCEEDS 7'– 0"
2. PROVIDE 8" MIN. DEPTH OF CLASS 7 CRUSHED STONE FOR BEDDING AS REQUIRED FOR MAINS.
3. SERVICE LATERAL STUBS SHALL TERMINATE AT LEAST 2 FEET INSIDE THE PROPERTY LINE BUT IN NO CASE SHALL THE SERVICE LATERAL STUB TERMINATE AT A DISTANCE LESS THAN 8 FEET FROM THE SANITARY SEWER MAIN.
4. BURY A 6 FOOT STEEL TEE FENCE POST AT END OF SERVICE LATERAL STUB AND BACK FILL TO FINISHED GRADE OF PROPERTY. A GUARD 6–FOOT TEE FENCE POST SHALL ALSO BE REQUIRED IF BURIED STEEL POST TOP IS BELOW FINISHED GRADE OF PROPERTY.

STANDARD SEWER SERVICE LATERAL
N.T.S.
SD–1 3

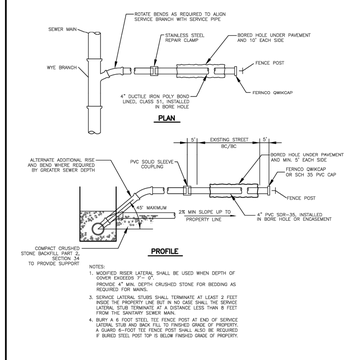

NOTES:
1. MODIFIED RISER LATERAL SHALL BE USED WHEN DEPTH OF COVER EXCEEDS 7'– 0"
2. PROVIDE 8" MIN. DEPTH OF CLASS 7 CRUSHED STONE FOR BEDDING AS REQUIRED FOR MAINS.
3. SERVICE LATERAL STUBS SHALL TERMINATE AT LEAST 2 FEET INSIDE THE PROPERTY LINE BUT IN NO CASE SHALL THE SERVICE LATERAL STUB TERMINATE AT A DISTANCE LESS THAN 8 FEET FROM THE SANITARY SEWER MAIN.
4. BURY A 6 FOOT STEEL TEE FENCE POST AT END OF SERVICE LATERAL STUB AND BACK FILL TO FINISHED GRADE OF PROPERTY. A GUARD 6–FOOT TEE FENCE POST SHALL ALSO BE REQUIRED IF BURIED STEEL POST TOP IS BELOW FINISHED GRADE OF PROPERTY.

BORED SEWER SERVICE LATERAL UNDER EXISTING STREET
N.T.S.
SD–1 4
REV. 05/2021

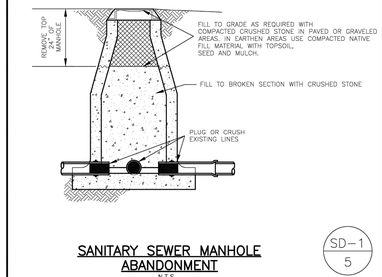

SANITARY SEWER MANHOLE ABANDONMENT
N.T.S.
SD–1 5
REV. 05/2021

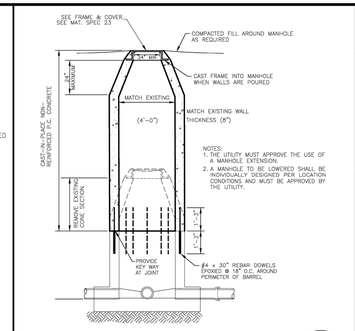

SANITARY SEWER MANHOLE EXTENSION/SHORTENING DETAIL
N.T.S.
SD–1 6
REV. 05/2021

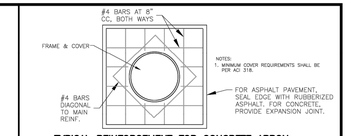

NOTES:
1. MINIMUM COVER REQUIREMENTS SHALL BE PER ACI 318.

TYPICAL REINFORCEMENT FOR CONCRETE APRON

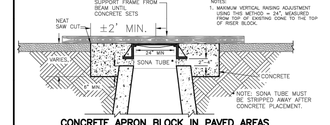

NOTES:
1. MAXIMUM VERTICAL RAISING ADJUSTMENT USING THIS METHOD = 24", MEASURED FROM TOP OF EXISTING CONE TO THE TOP OF RISER BLOCK.

CONCRETE APRON BLOCK IN PAVED AREAS
N.T.S.

FOR MANHOLE EXTENSION ADJUSTMENT WHICH EXCEED 24" IN PAVED AREAS, OR FOR MANHOLE SHORTENING IN PAVED AREAS, SEE DETAIL SD–1/6
SANITARY SEWER MANHOLE EXTENSION/SHORTENING DETAIL

MANHOLE RIM APRON (PAVED AREAS)
N.T.S.
SD–1 7
REV. 12/2021

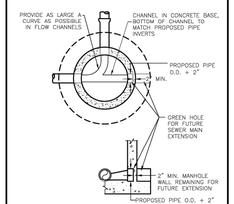

GREENHOLE/BLOCK OUT FOR FUTURE EXTENSION
N.T.S.
SD–1 8
REV. DEC. 2006

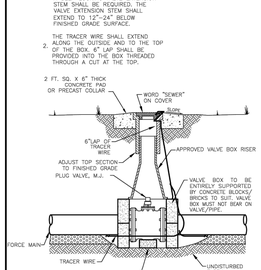

4"–12" SEWER FORCE MAIN PLUG VALVE DETAIL
N.T.S.
SD–1 9

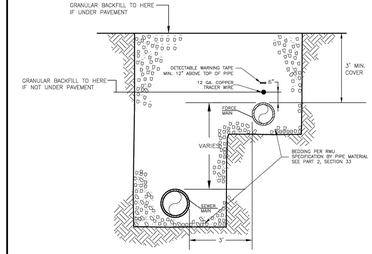

PARALLEL SEWER FORCE MAIN & SANITARY SEWER MAIN
N.T.S.
SD–1 10
REV. 01/2022

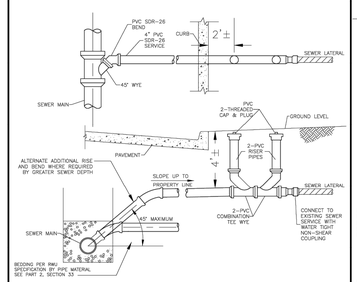

TWO–WAY CLEANOUTS WILL BE INSTALLED WHEN SEWER SERVICE IS IN THE STREET

4 INCH TWO–WAY SERVICE CLEANOUT
N.T.S.
SD–1 11
REV. DEC. 2006

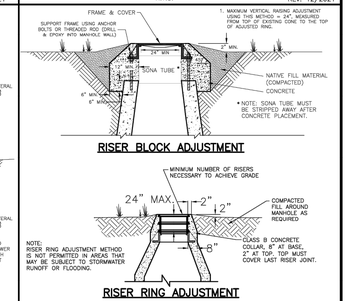

RISER BLOCK ADJUSTMENT

RISER RING ADJUSTMENT

FOR MANHOLE EXTENSION ADJUSTMENT WHICH EXCEED 24" IN GREEN AREAS, OR FOR MANHOLE SHORTENING IN GREEN AREAS, SEE DETAIL SD–1/6
SANITARY SEWER MANHOLE EXTENSION/SHORTENING DETAIL

MANHOLE RIM ADJUSTMENT (GREEN AREAS)
N.T.S.
SD–1 12
REV. 05/2021

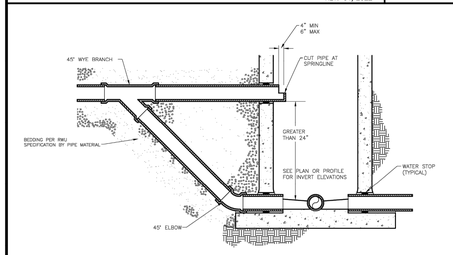

SANITARY SEWER OUTSIDE DROP MANHOLE
N.T.S.
SD–1 13
REV. 01/2022

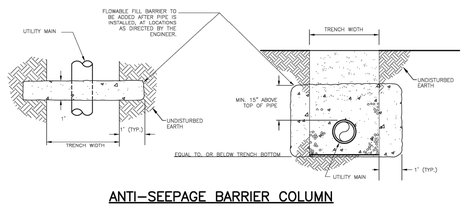

ANTI–SEEPAGE BARRIER COLUMN
N.T.S.
SD–1 14
REV. DEC. 2006

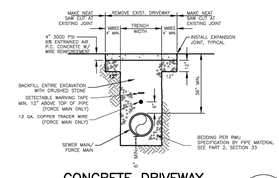

CONCRETE DRIVEWAY CROSSING REPAIR
N.T.S.
SD–1 15
REV. 09/2022

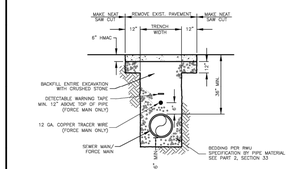

ASPHALT DRIVEWAY/STREET CROSSING REPAIR
N.T.S.
SD–1 16
REV. 09/2022

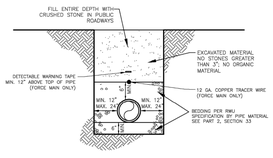

TRENCH/PIPE BEDDING DETAIL FOR SEWER FORCE MAINS & SANITARY SEWER MAINS
N.T.S.
SD–1 17
REV. 01/2022

RESERVED
SD–1 18

GENERAL CONSTRUCTION NOTES:

A. The contractor will be held solely responsible for damage occurring to any property during the construction of this project. Said contractor shall take all necessary pre–cautions to prevent property damage.

B. In accordance with generally accepted construction practices, the contractor will be solely and completely responsible for conditions of the job site, including safety of all persons and property during performance of the work. This requirement will apply continuously and not be limited to normal working hours.

The duty of Rogers Water Utilities to conduct construction inspection or review of the contractor's performance is not an inspection or review of the adequacy of the contractor's safety measures in, on, or near the construction site.

C. All water and sewer improvements shall be constructed in accordance with the latest revision to the Rogers Water Utilities Standard Specifications.

D. The contractor is specifically cautioned that the location and/or elevation of existing utilities as shown on these plans is based on records of the various utility companies and, where possible, measurements taken in the field. The information is not to be relied on as being exact or complete. The contractor must call the appropriate utility company at least 48 hours before any excavation to request exact field location of utilities. It shall be the responsibility of the contractor to relocate all existing utilities which conflict with the proposed improvements shown on the plans.

E. Contractor is to remove and dispose of all debris, rubbish and other materials resulting from previous and current demolition operations. Disposal will be in accordance with all local, state and/or federal regulations governing such operations.

F. Prior to installation of any utilities, the contractor is to excavate, verify, and calculate all crossings and inform the Rogers Water Utilities of any conflicts prior to construction.

G. Construction shall not start on any water utility until approval is given by Rogers Water Utilities. Said con–tractor shall not operate any valve, hydrant, or water utility appurtenance nor shall he attach to or tap any water utility main without approval. The contractor shall bear the cost and consequence of any disruption of utility operation caused by construction.

SD–1 19

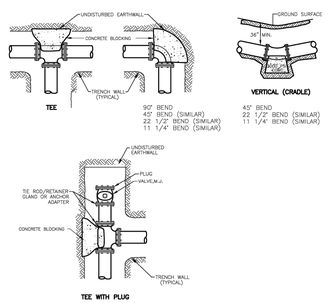

NOTES:
1. All fittings shall be mechanical joint.
2. Do not cover bells or flanges with concrete.
3. Wrap all fittings with polyethylene.
4. Rock all tees according to size of branch.
5. Blocking future line extensions shall be such that later removal is possible.
6. All bends where fittings are used, both horizontal and vertical, shall be backed.
7. Reaction backing table is based on 150 p.s.i. and soil bearing pressure of 2,500 lb./sq. ft. Additional backing may be required in some areas as directed by engineer.

REACTION BACKING TABLE					
REQUIRED SQ. FT. OF UNDISTURBED EARTH/WALL FOR REACTION BACKING					
	TYPE OF FITTINGS				
SIZE	TEE, OR PLUG/CAP	90°	45°	22 1/2°	11 1/4°
2"	1	1	1	1	
3"	1	1	1	1	
4"	2	1	1	1	
6"	5	2	1	1	1
8"	9	3	2	1	1
12"	10	10	5	3	2

SEWER FORCE MAIN THRUST BLOCKING DETAIL
N.T.S.
SD–1 20
REV. 05/2021

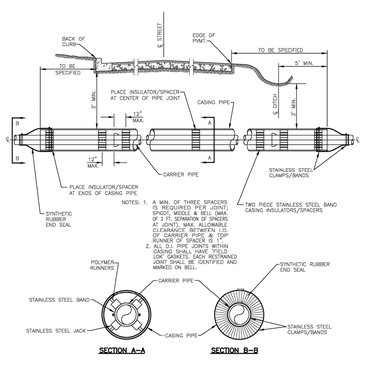

CARRIER & CASING SIZES									
CARRIER	6"	8"	10"	12"	15"	16"	18"	20"	24"
CASING	16"	16"	18"	24"	30"	30"	30"	36"	36"
CASING/WALL THICKNESS	.250	.250	.250	.375	.500	.500	.500	.500	.500

JACK & BORE UNDER ROADWAY DETAIL
N.T.S.
SD–1 21
REV. 12/2021

METER BOX TO BE ENTIRELY SUPPORTED BY CONCRETE BLOCKS/BRICKS TO SUIT. BOX MUST NOT BEAR ON PIPE.

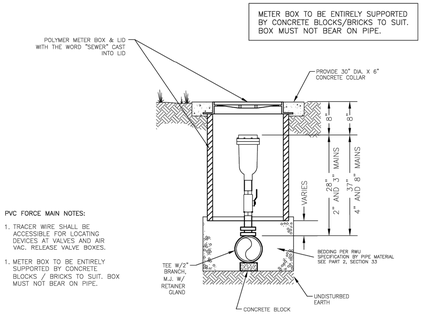

PVC FORCE MAIN NOTES:
1. TRACER WIRE SHALL BE ACCESSIBLE FOR LOCATING DEVICES AT VALVES AND AIR VAC. RELEASE VALVE BOXES.
1. METER BOX TO BE ENTIRELY SUPPORTED BY CONCRETE BLOCKS / BRICKS TO SUIT. BOX MUST NOT BEAR ON PIPE.

SEWER FORCE MAIN AIR AND VACUUM RELEASE VALVE ASSEMBLY
N.T.S.
SD–1 22
REV. 12/2021

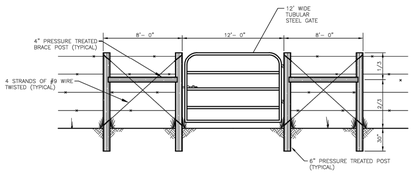

NOTES: 1. H–brace units shall be installed prior to cutting existing fence
2. Height of post to match existing posts.
3. New wire shall be the same type as existing fence.

FARM GATE INSTALLATION DETAIL
N.T.S.
SD–1 23

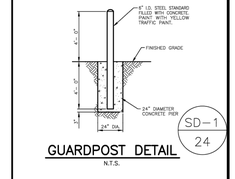

GUARDPOST DETAIL
N.T.S.
SD–1 24

SEE MATERIAL SPECIFICATIONS FOR APPROVED MANUFACTURERS

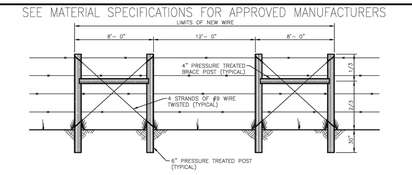

NOTES: 1. H–brace units shall be installed prior to cutting existing fence
2. Height of post to match existing posts.
3. New wire shall be the same type as existing fence.

BARBED WIRE FENCE CROSSING REPAIR DETAIL
N.T.S.
SD–1 25

SEWER DETAILS

RWU ROGERS WATER UTILITIES
P.O. DRAWER 338
601 SOUTH 2ND ROGERS, ARKANSAS
72757–0338

REVISION DATE	SHEET NO.
9/20/2022	SD–1

SD-1-2022.DWG