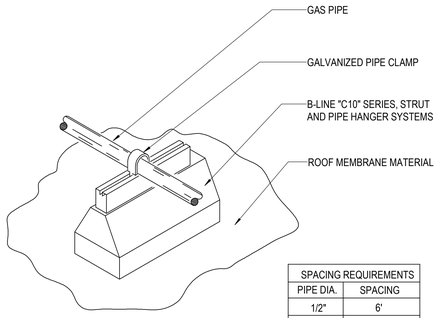

SPACING REQUIREMENTS	
PIPE DIA.	SPACING
1/2"	6'
3/4" OR 1"	8'
1¼" OR LARGER	10'

NOTE:
USE COPPER PLATED CLAMPS WHEN SUPPORTING COPPER PIPE.

1 PIPE ROOFTOP SUPPORT
NOT TO SCALE

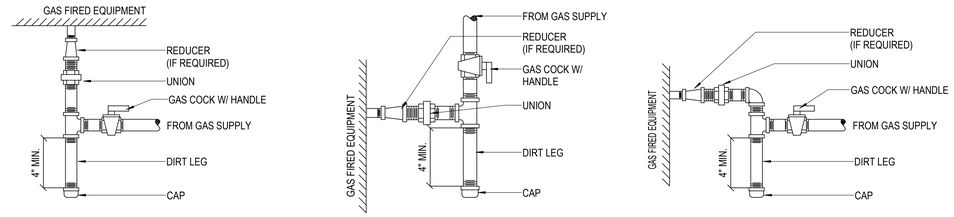

2 TYPICAL GAS PIPING CONNECTIONS
NOT TO SCALE

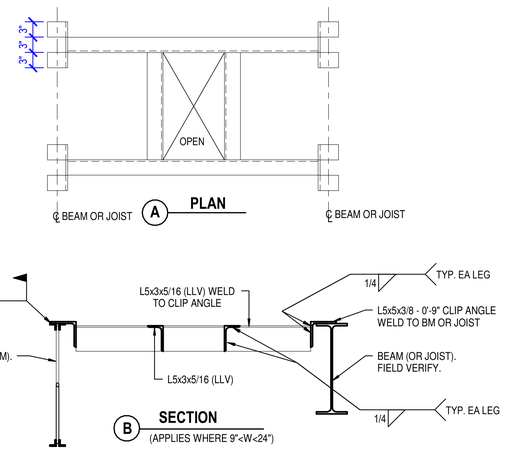

3 RTU SUPPORT FRAMING DETAIL
NOT TO SCALE

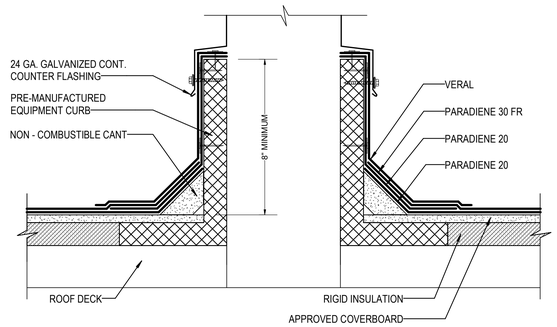

4 ROOFTOP MOUNTED CURB FLASHING
NOT TO SCALE

CROMWELL
1300 East 6th Street Little Rock, AR 72202
501.372.2900 cromwell.com
100 W. Emma Ave. Springdale, AR 72764
479.320.2741

Project

MERCY HOSPITAL BERRYVILLE
RTU - 11 REPLACEMENT
214 CARTER STREET, BERRYVILLE, AR 72616

Design Phase
CONSTRUCTION DOCUMENTS

Revisions

No.	Date	Description

Stamp

Notes
1. CROMWELL ARCHITECTS ENGINEERS, INC. ALL RIGHTS RESERVED
2. THIS SHEET DESIGNED FOR COLOR PRINTING. CRITICAL INFORMATION MAY BE LOST WITH BLACK AND WHITE PRINTING.

Project Number
2025-020

Issue Date
07-14-2025

Sheet Title
DETAILS

Sheet Number
M-502