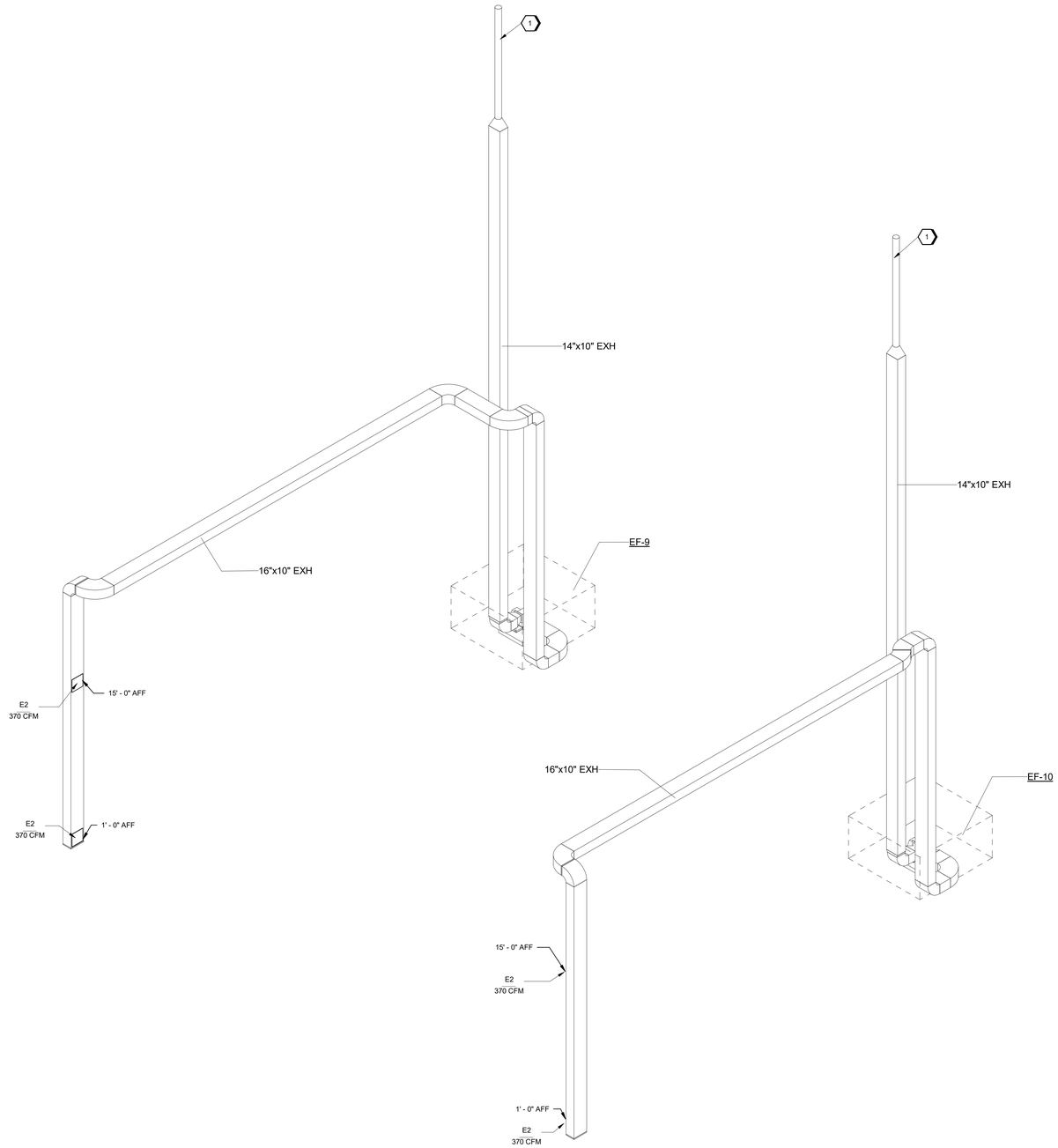

1 CASTING BAY EXHAUST ISOMETRIC
SCALE

SHEET KEYNOTES

KEYNOTES	
1	PROVIDE EXHAUST STACK DISCHARGE WITH RAIN SLEEVE PER DETAIL A1 ON SHEET M-809.

GRAPHIC SCALE(S)

2' 4' 8' 12'
1/4" = 1'-0"

NABHOLZ

STATE OF ARKANSAS
STEVE J. GOODELL
ENGINEER
No. 9593
09/18/2024

Jacobs
1999 Bryan Street Suite 2000
Dallas, TX 75201
Tel 214.638.0145
Fax 214.638.4447
Entity: Jacobs Engineering Group Inc.
License Type: Engineering
License #: 178
License Exp Date: 12/31/2024

NO.	DATE	REVISION	BY	CHK
0	09/18/2024	100% ISSUED FOR CONSTRUCTION - EXPANSION	JWG	SJG

DSGN ASM DR ASM CHK JWG APVD JWG APVD SJG

GMLRS
Camden OSD
Calhoun County, Arkansas
Aerojet Rocketdyne

MECHANICAL
HVAC ISOMETRIC VIEWS
CASTING BAY EXHAUST

SHEET NO
MH902

SCALE	
DATE	09/18/2024
PROJ	D3754502
DWG	CMDN-OSD_GMLRS_MH902

© Jacobs Solutions 2023. ALL RIGHTS RESERVED.
REUSE OF DOCUMENTS: THIS DOCUMENT, AND THE IDEAS AND DESIGNS INCORPORATED HEREIN, AS AN INSTRUMENT OF PROFESSIONAL SERVICE, IS THE PROPERTY OF JACOBS AND SHALL NOT BE USED, IN WHOLE OR IN PART, FOR ANY OTHER PROJECT WITHOUT THE WRITTEN AUTHORIZATION OF JACOBS.