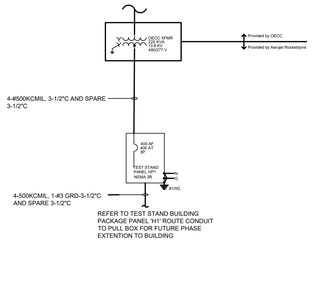

C1 TEST STAND ELECTRICAL SERVICE
SCALE NTS

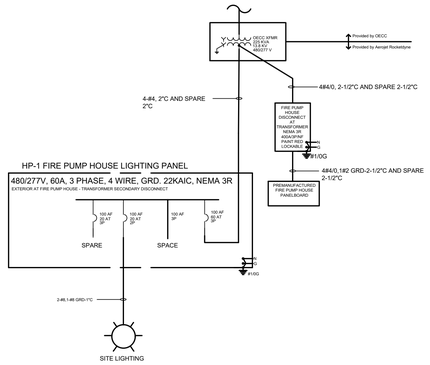

C2 FIRE PUMP HOUSE AT GMLRS
SCALE NTS

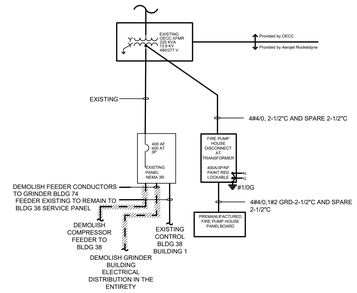

C3 CONTROL BLDG 38 AND FIRE PUMP HOUSE
SCALE NTS

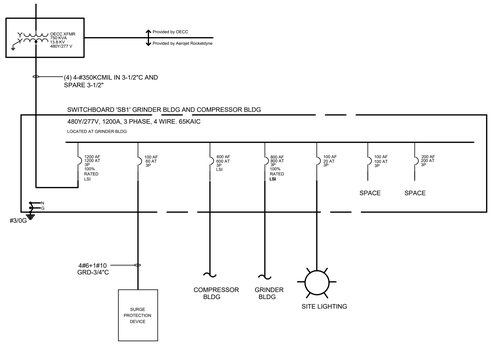

B1 GRINDER AND COMPRESSOR BLDG ELECTRICAL SERVICE
SCALE NTS

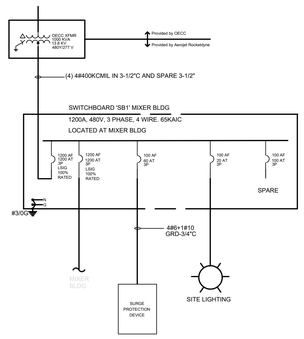

B3 MIXER BLDG ELECTRICAL SERVICE
SCALE NTS

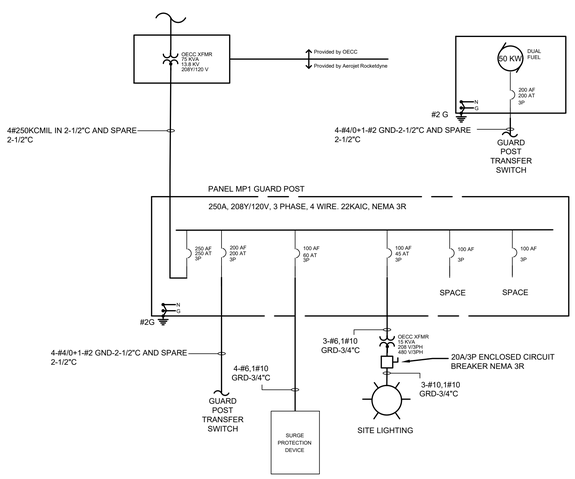

A1 GUARD POST ELECTRICAL SERVICE
SCALE NTS

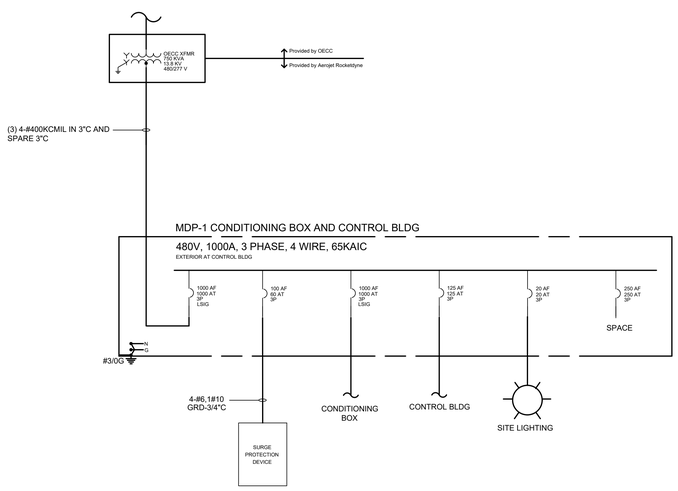

B5 CONDITIONING BOXES, CONTROL BLDG ELECTRICAL SERVICE
SCALE NTS

LOAD ANALYSIS

	CONNECTED LOAD	DEMAND LOAD
TEST STAND SATELLITE CONTROL BLDG	99.6 KVA	98.2 KVA
TOTAL TRANSFORMER LOAD		98.2 KVA

NOTES:
1. COORDINATE ELECTRICAL SERVICE SHUTDOWNS WITH OECC AND AR UTILITY PROJECT MANAGER. PROVIDE MINIMUM 21 DAY NOTICE PRIOR TO ANY ELECTRICAL UTILITY SHUTDOWNS.

LOAD ANALYSIS

	CONNECTED LOAD	DEMAND LOAD
FIRE PUMP HOUSE AT GMLRS	10 KVA	10 KVA
125 HP FIRE PUMP	130 KVA	130 KVA
SITE LIGHTING	0.25 KVA	0.25 KVA
TOTAL TRANSFORMER LOAD		135.25 KVA

NOTES:
1. COORDINATE ELECTRICAL SERVICE SHUTDOWNS WITH OECC AND AR UTILITY PROJECT MANAGER. PROVIDE MINIMUM 21 DAY NOTICE PRIOR TO ANY ELECTRICAL UTILITY SHUTDOWNS.

LOAD ANALYSIS

	CONNECTED LOAD	DEMAND LOAD
EXISTING CONTROL BLDG 38	30 KVA	30 KVA
FIRE PUMP HOUSE AT BLDG 38	10 KVA	10 KVA
125 HP FIRE PUMP	130 KVA	130 KVA
TOTAL TRANSFORMER LOAD		170 KVA

NOTES:
1. COORDINATE ELECTRICAL SERVICE SHUTDOWNS WITH OECC AND AR UTILITY PROJECT MANAGER. PROVIDE MINIMUM 21 DAY NOTICE PRIOR TO ANY ELECTRICAL UTILITY SHUTDOWNS.

LOAD ANALYSIS

	CONNECTED LOAD	DEMAND LOAD
GRINDER BLDG	556 KVA	556 KVA
COMPRESSOR BLDG	225.6 KVA	225.6 KVA
SITE ROADWAY LIGHTING	1 KVA	1 KVA
TOTAL TRANSFORMER LOAD		782.6 KVA

NOTES:
1. COORDINATE ELECTRICAL SERVICE SHUTDOWNS WITH OECC AND AR UTILITY PROJECT MANAGER. PROVIDE MINIMUM 21 DAY NOTICE PRIOR TO ANY ELECTRICAL UTILITY SHUTDOWNS.

LOAD ANALYSIS

	CONNECTED LOAD	DEMAND LOAD
MIXER BLDG	809.8 KVA	809.8 KVA
SITE ROADWAY LIGHTING	4 KVA	4 KVA
TOTAL TRANSFORMER LOAD		813.8 KVA

NOTES:
1. COORDINATE ELECTRICAL SERVICE SHUTDOWNS WITH OECC AND AR UTILITY PROJECT MANAGER. PROVIDE MINIMUM 21 DAY NOTICE PRIOR TO ANY ELECTRICAL UTILITY SHUTDOWNS.

LOAD ANALYSIS

	CONNECTED LOAD	DEMAND LOAD
GUARD POST	34 KVA	21 KVA
STORM SHELTER	10 KVA	5 KVA
SITE ROADWAY LIGHTING	1 KVA	1 KVA
TOTAL TRANSFORMER LOAD		27 KVA

NOTES:
1. COORDINATE ELECTRICAL SERVICE SHUTDOWNS WITH OECC AND AR UTILITY PROJECT MANAGER. PROVIDE MINIMUM 21 DAY NOTICE PRIOR TO ANY ELECTRICAL UTILITY SHUTDOWNS.

LOAD ANALYSIS

	CONNECTED LOAD	DEMAND LOAD
CONDITIONING BOX	733.6 KVA	733.6 KVA
CONTROL BLDG	19 KVA	18.7 KVA
SITE ROADWAY LIGHTING	2.5 KVA	2.5 KVA
TOTAL TRANSFORMER LOAD		755 KVA

NOTES:
1. COORDINATE ELECTRICAL SERVICE SHUTDOWNS WITH OECC AND AR UTILITY PROJECT MANAGER. PROVIDE MINIMUM 21 DAY NOTICE PRIOR TO ANY ELECTRICAL UTILITY SHUTDOWNS.

GENERAL NOTES

1. COORDINATE CONNECTIONS TO OECC UTILITY TRANSFORMER. INSTALL ELECTRICAL SERVICE ACCORDING TO OECC REQUIREMENTS.
2. PROVIDE SURGE PROTECTION DEVICE WITH CIRCUIT BREAKER SIZED AND INSTALLED ACCORDING TO MANUFACTURER REQUIREMENTS.
3. PROVIDE ARC FLASH CALCULATIONS AND LABELS. COORDINATE WITH OECC UTILITY FOR PRIMARY SHORT CIRCUIT RATING AND TRANSFORMER RATINGS.

NABHOLZ

ARKANSAS REGISTERED PROFESSIONAL ENGINEER No. 12903 07-19-2024

Jacobs
1990 Post Oak Blvd, Suite 1100
Entity: Jacobs Engineering Group Inc.
Tel: 214-638-0145
License Type: Engineering
Houston, TX 77056-3901
License # 176
Fax: 214-638-0447
License Exp Date: 12/31/2024

NO.	DATE	REVISION	DR	CHK	APVD
A	2024-01-19	IFC	AM	AF	APVD
B	2024-01-23	90% ISSUED FOR REVIEW	AM	AF	BY
	2024-07-19	100% ISSUED FOR CONSTRUCTION	DR	CA	TM

DSGN

Site Development
Camden OSD
Calhoun County, Arkansas
Aeroject Rocketdyne

Electrical Detail & Schedules
Sheet

SHEET NO
ES502

SCALE	NTS
DATE	07/01/2024
PROJ	D35754502
DWG	D35754502_Aerojet Camden_ES502.dwg
SHEET	9 of 9

© Jacobs Solutions 2023. ALL RIGHTS RESERVED.
REUSE OF DOCUMENTS: THIS DOCUMENT, AND THE IDEAS AND DESIGNS INCORPORATED HEREIN, AS AN INSTRUMENT OF PROFESSIONAL SERVICE, IS THE PROPERTY OF JACOBS AND IS NOT TO BE USED, IN WHOLE OR IN PART, FOR ANY OTHER PROJECT WITHOUT THE WRITTEN AUTHORIZATION OF JACOBS.