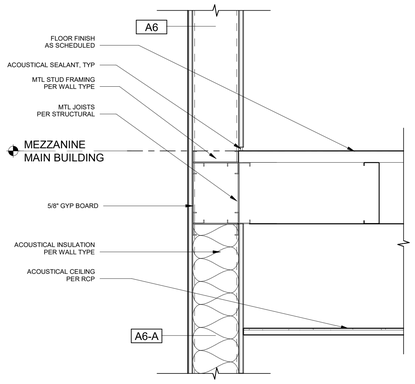

D1 SECTION DETAIL - MEZZANINE FLOOR AT WALL
SCALE 1 1/2" = 1'-0"

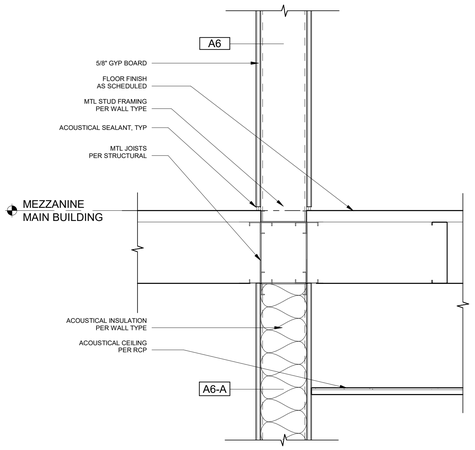

B1 SECTION DETAIL - MEZZANINE BALCONY AT WALL
SCALE 1 1/2" = 1'-0"

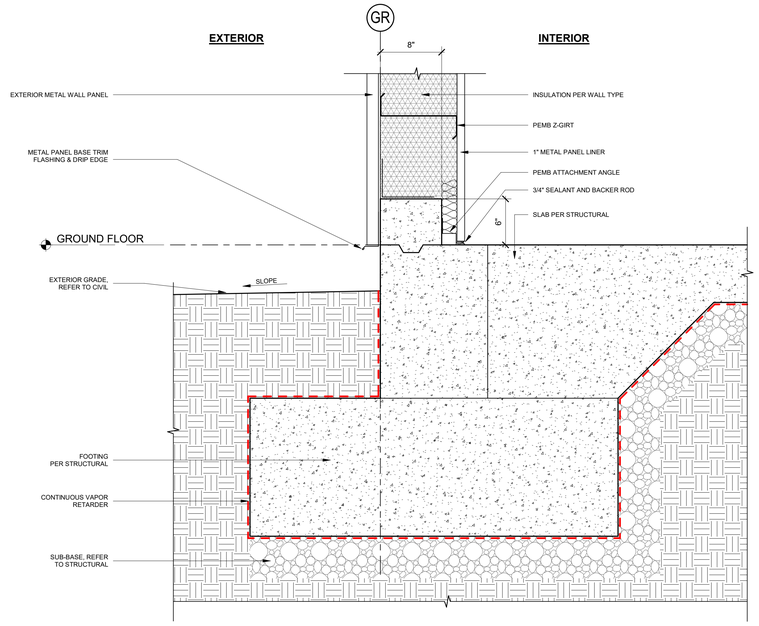

B2 SECTION DETAIL - BASE OF EXTERIOR WALL AT MP-2
SCALE 1 1/2" = 1'-0"

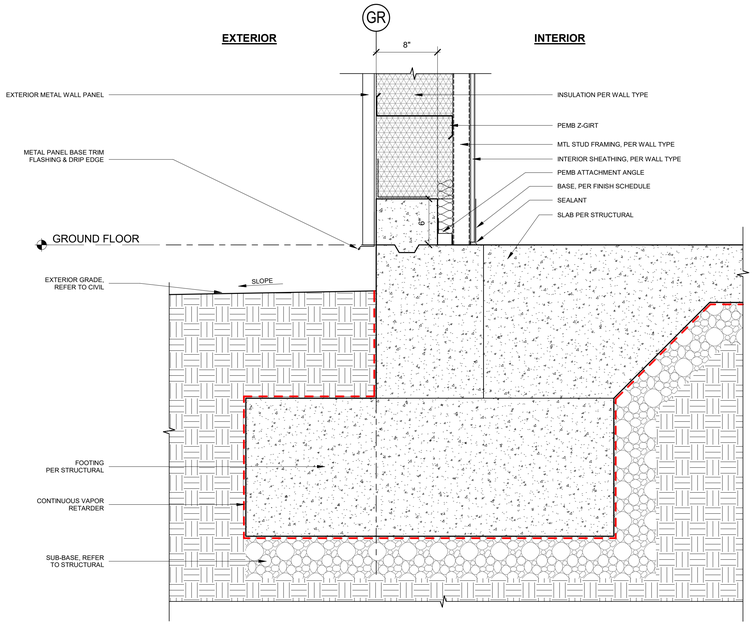

B4 SECTION DETAIL - BASE OF EXTERIOR WALL AT MP-3
SCALE 1 1/2" = 1'-0"

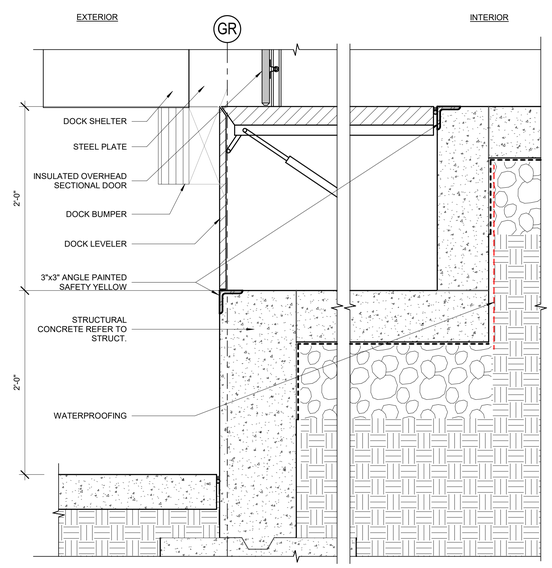

A1 SECTION DETAIL - LOADING DOCK
SCALE 1 1/2" = 1'-0"

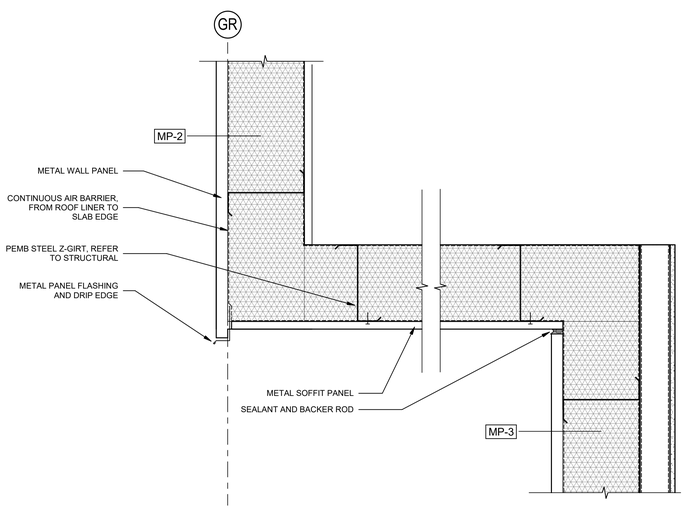

A2 SECTION DETAIL - METAL SOFFIT
SCALE 1 1/2" = 1'-0"

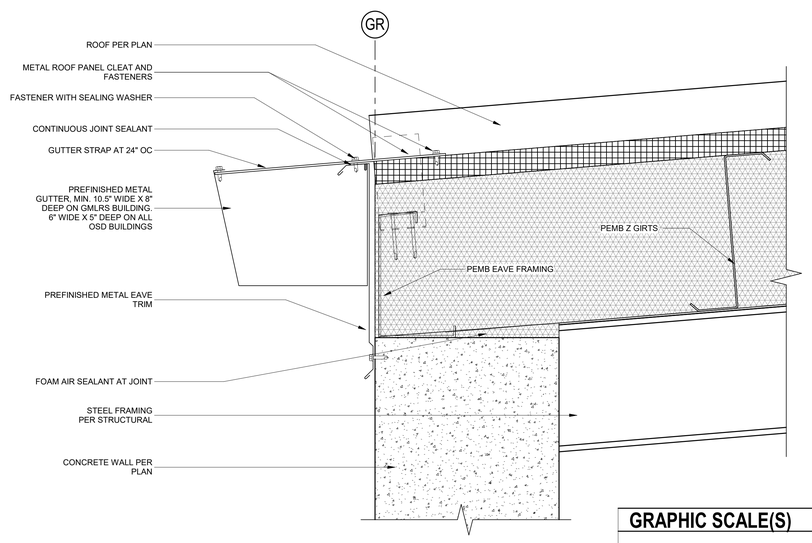

A4 SECTION DETAIL - ROOF AT CONCRETE WALL
SCALE 3" = 1'-0"

GRAPHIC SCALE(S)

3" = 1'-0" (3", 6", 1')

1 1/2" = 1'-0" (6", 1', 2')

NABHOLZ

REGISTERED ARCHITECT
CHRIS ALFSTAD
STATE OF ARKANSAS
09/18/2024

Jacobs
Dallas, TX 75201
Fax: 214-638-0447
1999 Bryan Street Suite 3300
Firm Registration Number: Jacobs Engineering Inc.
License Type: Architecture
License Exp Date: 01/31/2025

NO.	DATE	DSGN	DR	CHK	APV'D	BY	APV'D
0	09/18/2024	MJS	MJS	MB/RP	BH	TM	TM

100% ISSUED FOR CONSTRUCTION - EXPANSION

REVISION

REUSE OF DOCUMENTS: THIS DOCUMENT, AND THE IDEAS AND DESIGNS INCORPORATED HEREIN, AS AN INSTRUMENT OF PROFESSIONAL SERVICE, IS THE PROPERTY OF JACOBS AND IS NOT TO BE USED, IN WHOLE OR IN PART, FOR ANY OTHER PROJECT WITHOUT THE WRITTEN AUTHORIZATION OF JACOBS.

© Jacobs Solutions 2023. ALL RIGHTS RESERVED.

GMLRS
Camden OSD
Calhoun County, Arkansas
Aerojet Rocketdyne

ARCHITECTURE
SECTION DETAILS

SHEET NO
A-510

SCALE	As indicated
DATE	09/18/2024
PROJ	D3754502
DWG	CMDN-OSD_GMLRS_A-510