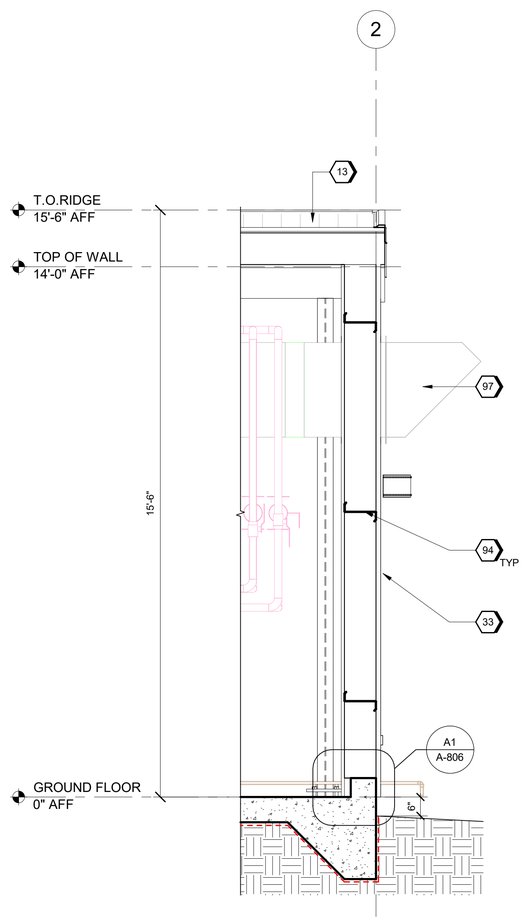

A1 WALL SECTION
SCALE 1/2" = 1'-0"

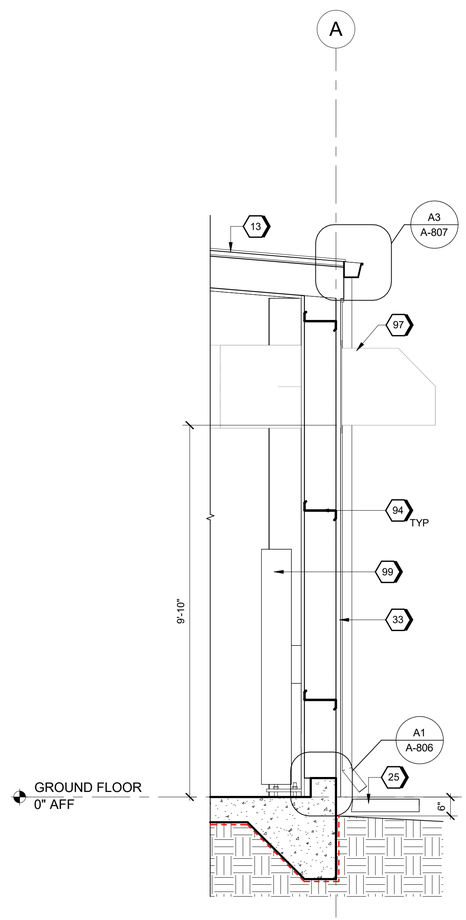

A2 WALL SECTION
SCALE 1/2" = 1'-0"

GENERAL SHEET NOTES

A. FINISHED FLOOR ELEVATION 0'-0" IS A REFERENCE ELEVATION FOR COORDINATION WITH BUILDING ELEMENTS. ACTUAL ELEVATION IS INDICATED ON CIVIL DRAWINGS

B. FOR ARCHITECTURAL GENERAL NOTES, SYMBOLS, AND LEGEND, REFER TO DRAWING G-002.

C. FOR BUILDING CODE DATA AND LIFE SAFETY PLAN, REFER TO DRAWING G-101.

D. FURNITURE AND EQUIPMENT IS SHOWN FOR DISCIPLINE COORDINATION ONLY.

#SHEET KEYNOTES

13 RP-2 - REFER TO CAMPUS DETAILS A-800
25 PRECAST CONCRETE RAINWATER SPLASH BLOCK AT EACH DOWNSPOUT DISCHARGE; PLACE ON FINISH GRADE; SLOPE DOWN AWAY FROM BUILDING-TYPICAL
33 PEMB: SHEET METAL WALL PANEL, REFER TO CAMPUS DETAILS MP-2/A-800, TOP/BOTTOM TRIM AND FLASHING - TYPICAL
94 PRE ENGINEERED STL GIRT - TYPICAL
97 MECHANICAL EQUIPMENT - TYPICAL
99 ELECTRICAL EQUIPMENT - TYPICAL

GRAPHIC SCALE(S)

0 4' 8' 16' 24'
1/8" = 1'-0"

NO.	DATE	REVISION	BY	APV'D
0	09/18/2024	100% ISSUED FOR CONSTRUCTION - EXPANSION	IE	TM

DSGN IE DR ND/YA CHK BH APV'D TM

© Jacobs Solutions 2023. ALL RIGHTS RESERVED.

REUSE OF DOCUMENTS: THIS DOCUMENT, AND THE IDEAS AND DESIGNS INCORPORATED HEREIN, AS AN INSTRUMENT OF PROFESSIONAL SERVICE, IS THE PROPERTY OF JACOBS AND SHALL NOT BE USED, IN WHOLE OR IN PART, FOR ANY OTHER PROJECT WITHOUT THE WRITTEN AUTHORIZATION OF JACOBS.

Jacobs
1999 Bryan Street Suite 3500 Dallas, TX 75201
Tel: 214.638.0145 Fax: 214.638.0447
Entity: Jacobs Consultants Inc.
License Type: Architecture
License: 01372
Exp. Date: 01/31/2025

REGISTERED ARCHITECT
CHRIS ALFSTAD
9 12337
STATE OF ARKANSAS
09/18/2024
SEAL

Compressor-Building
Camden OSD
Calhoun County, Arkansas
Aerojet Rocketdyne

Jacobs NABHOLZ

ARCHITECTURE
WALL SECTIONS

SHEET NO
A-302

SCALE	As indicated
DATE	09/18/2024
PROJ	D3754502
DWG	CMDN-OSD_Compressor-Building_A-302

PLOT DATE/TIME: 9/18/2024 9:24:55 AM

9/18/2024 9:24:55 AM A-302
Autodesk Docs://US_D3754500_FED_Aerojet Rocketdyne/D3754500_CMDN_OSD_Compressor-Building_ARCH-INT.rvt