CROMWELL
1300 East 6th Street Little Rock, AR 72202
501.372.2900 cromwell.com

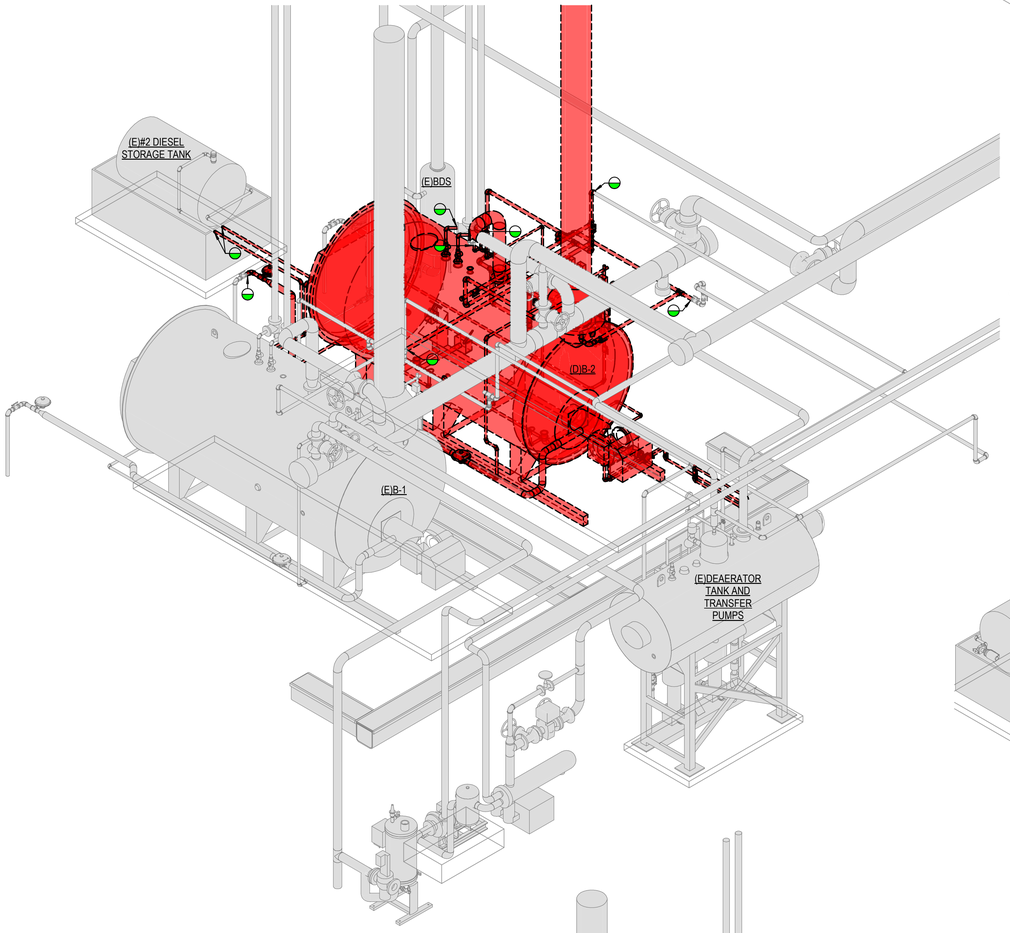

1 MECHANICAL DEMOLITION ISOMETRIC - NORTHWEST VIEW
NOT TO SCALE

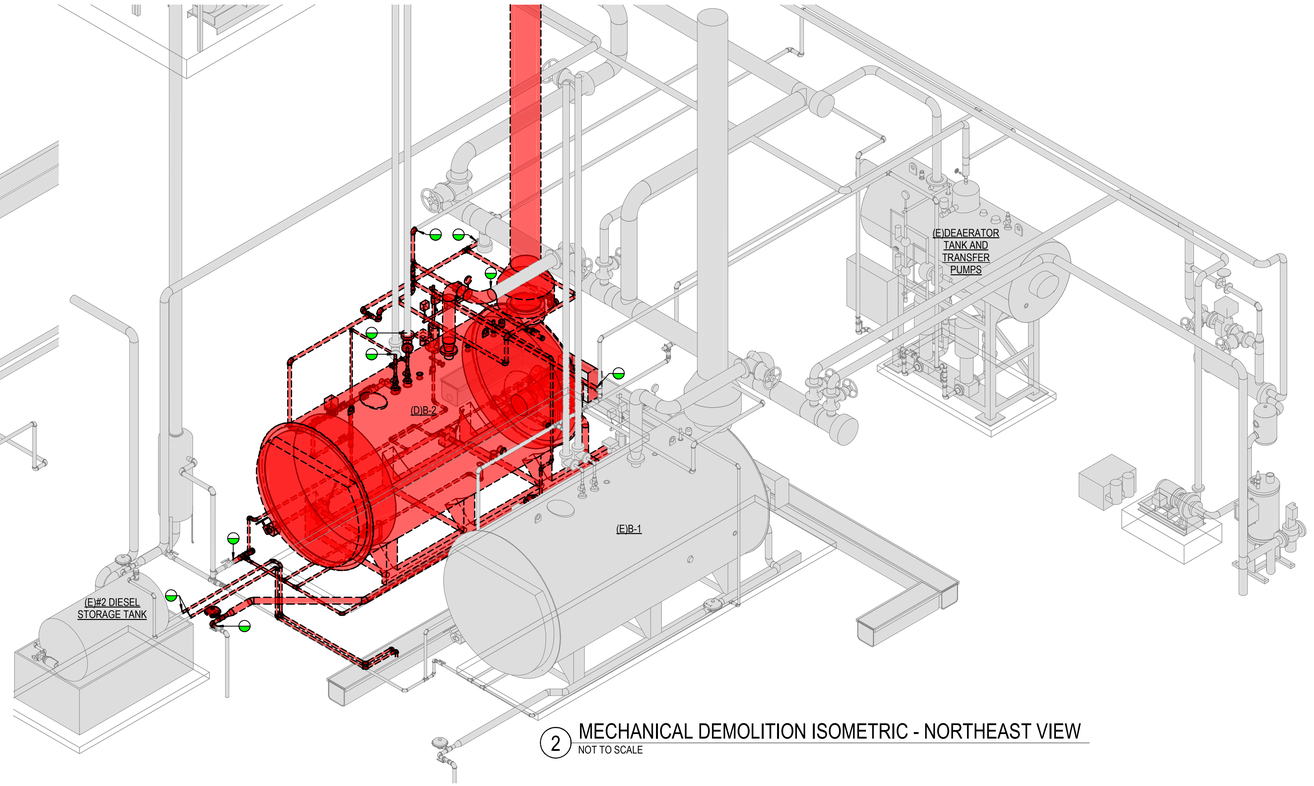

2 MECHANICAL DEMOLITION ISOMETRIC - NORTHEAST VIEW
NOT TO SCALE

GENERAL NOTES:

1. REFER TO MECHANICAL DEMOLITION PLAN AND KEYED NOTES FOR PIPE SERVICE AND SIZES.

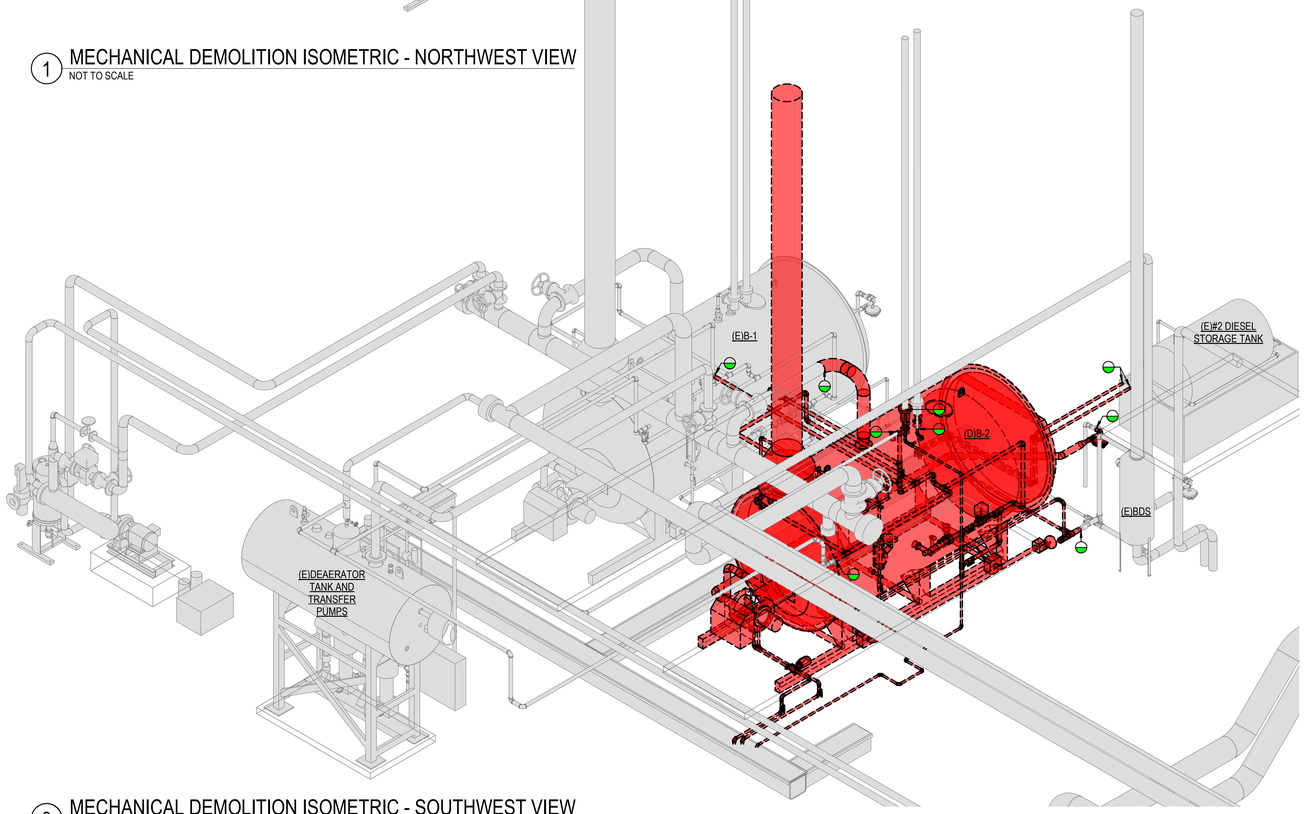

3 MECHANICAL DEMOLITION ISOMETRIC - SOUTHWEST VIEW
NOT TO SCALE

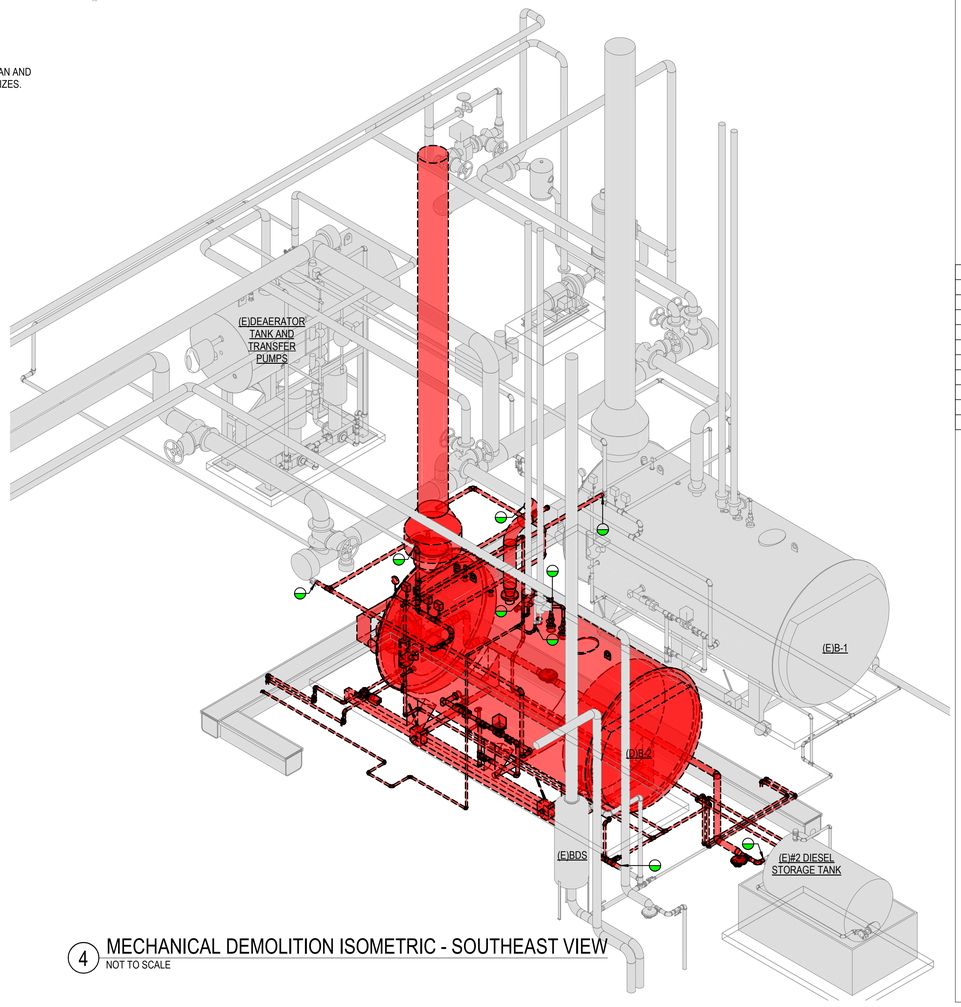

4 MECHANICAL DEMOLITION ISOMETRIC - SOUTHEAST VIEW
NOT TO SCALE

Project

L'Oreal USA Products
NLR - BOILER REPLACEMENT
11500 Maybelline Rd
North Little Rock, AR 72117

Design Phase

CONSTRUCTION DOCUMENTS

Revisions

No.	Date	Description

Stamp

CROMWELL ARCHITECTS/ ENGINEERS #5 — STATE OF AUTHORIZATION — ARKANSAS ENGINEER

STATE OF ARKANSAS — REGISTERED PROFESSIONAL ENGINEER — No. 9386 — CHRISTOPHER R. WEBB

04-11-2025

Notes

1. CROMWELL ARCHITECTS ENGINEERS, INC. ALL RIGHTS RESERVED

2. THIS SHEET DESIGNED FOR COLOR PRINTING. CRITICAL INFORMATION MAY BE LOST WITH BLACK AND WHITE PRINTING.

Project Number: 2025-024

Issue Date: 04-11-2025

Sheet Title: MECHANICAL DEMOLITION ISOMETRIC VIEWS

Sheet Number: MD901