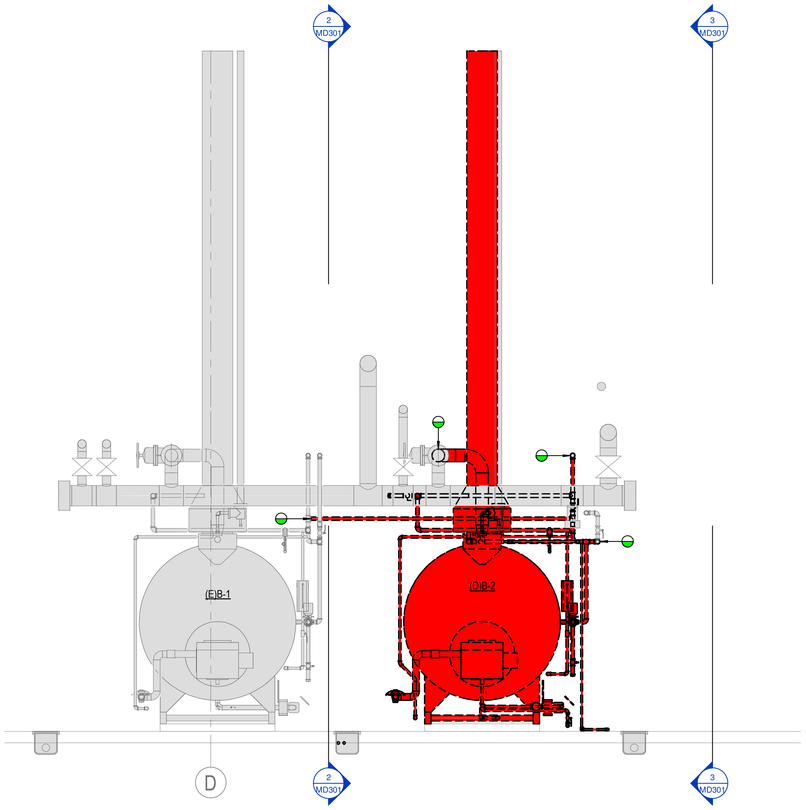

1 MECHANICAL DEMOLITION SECTION - WEST VIEW
3/8" = 1'-0"

GENERAL NOTES:

1. REFER TO MECHANICAL DEMOLITION PLAN AND KEYED NOTES FOR PIPE SERVICE AND SIZES.

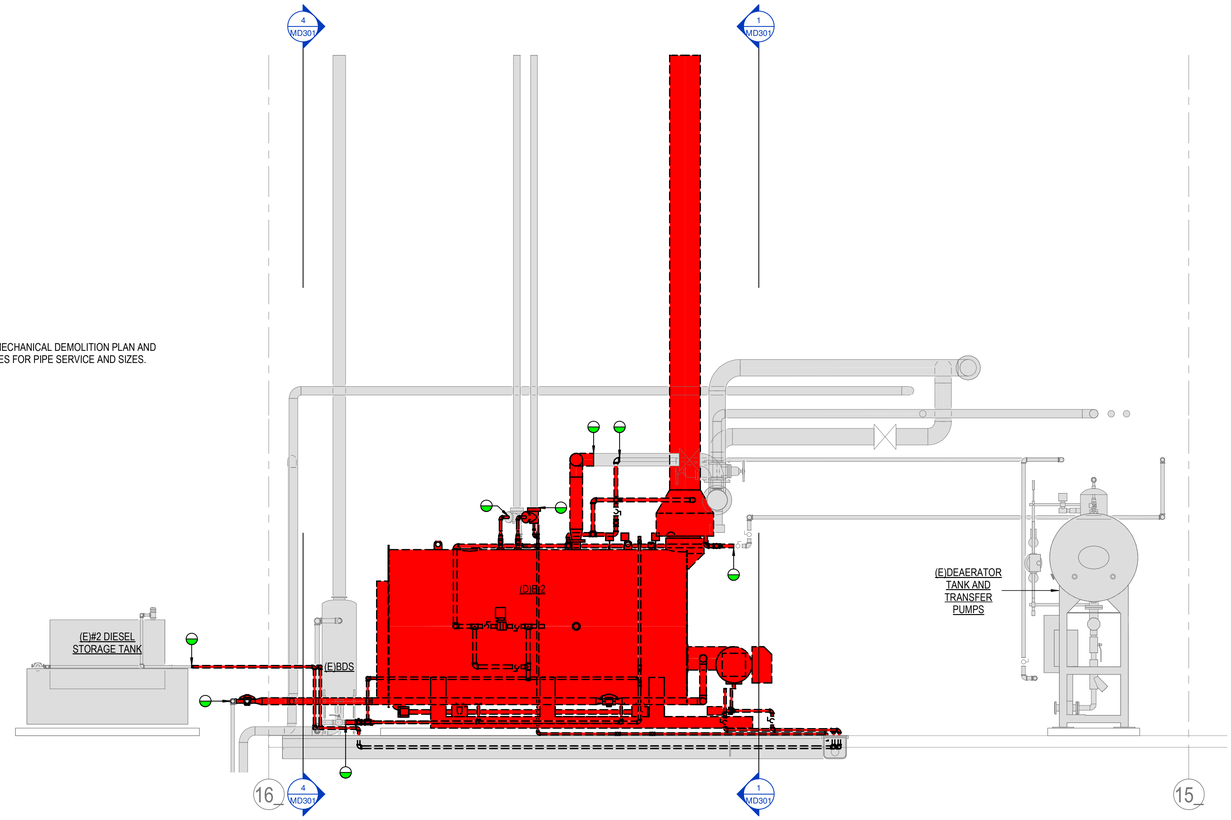

2 MECHANICAL DEMOLITION SECTION - NORTH VIEW
3/8" = 1'-0"

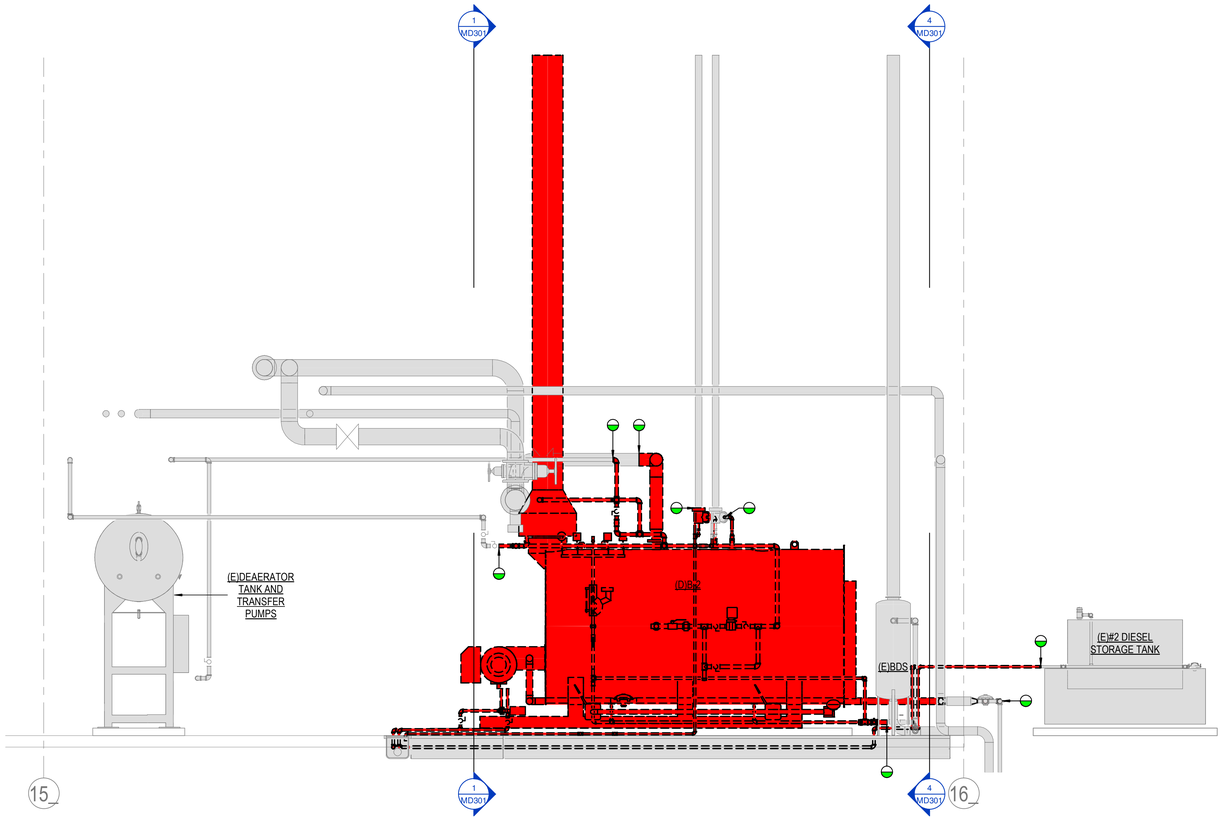

3 MECHANICAL DEMOLITION SECTION - SOUTH VIEW
3/8" = 1'-0"

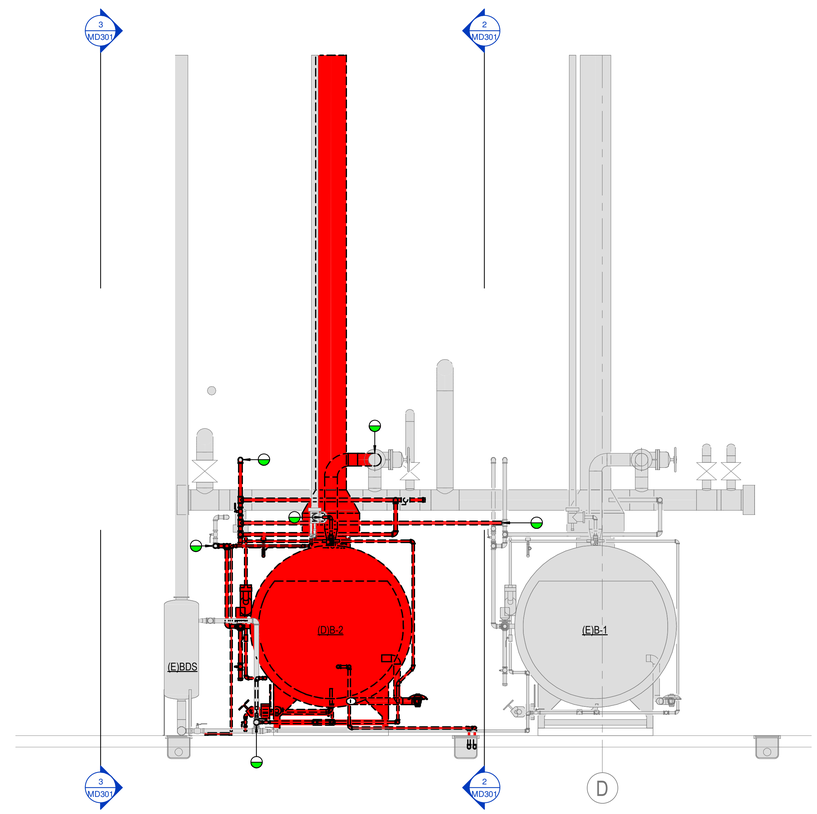

4 MECHANICAL DEMOLITION SECTION - EAST VIEW
3/8" = 1'-0"

CROMWELL
1300 East 6th Street Little Rock, AR 72202
501.372.2900 cromwell.com

Project

L'Oreal USA Products
NLR - BOILER REPLACEMENT

11500 Maybelline Rd
North Little Rock, AR 72117

Design Phase

CONSTRUCTION DOCUMENTS

Revisions

No.	Date	Description

Stamp

CROMWELL ARCHITECTS ENGINEERS #5 ARKANSAS

STATE OF ARKANSAS REGISTERED PROFESSIONAL ENGINEER No. 9395 CHRISTOPHER R. ADAMS

04-11-2025

Notes

1. CROMWELL ARCHITECTS ENGINEERS, INC. ALL RIGHTS RESERVED

2. THIS SHEET DESIGNED FOR COLOR PRINTING. CRITICAL INFORMATION MAY BE LOST WITH BLACK AND WHITE PRINTING.

Project Number **2025-024**

Issue Date **04-11-2025**

Sheet Title

MECHANICAL DEMOLITION SECTIONS

Sheet Number

MD301