ELECTRIC STEAM BOILER SCHEDULE

MARK	SERVES	LOCATION	BOILER HORSE POWER	INPUT CAPACITY (kW)	OUTPUT CAPACITY (LBS/HR)	DESIGN PRESSURE (PSIG)	OPERATING PRESSURE (PSIG)	FEEDWATER TEMPERATURE (°F)	VESSEL CAPACITY (GAL)	ELECTRICAL DATA			WEIGHT (LBS)		HEATER ELEMENTS			BASIS OF DESIGN	NOTES
										FLA	MOCP	VOLTS/Ø	SHIPPING	OPERATING	QTY	kW EA.	STEPS		
B-2	PLANT STEAM	MECH/ELECT - 101	91.75	900	3070	150	55	212	200	1084	1600	480/3	3,200	4,800	75	12	12@72, 1@36	CLEAVER BROOKS S-362	1-4

NOTES:

1. PROVIDE BOILER WITH FACTORY INSTALLED 2" FIBERGLASS INSULATION AND STEEL PAINTED JACKETING, SINGLE-POINT ELECTRICAL CONNECTION, LOCKABLE FUSED ELECTRICAL DISCONNECT SWITCH, ANCHOR BOLT POCKETS ON SKID BASE, STEAM PRESSURE GAUGE WITH TEST COCK, WATER-LEVEL SIGHT GAUGE WITH DRAIN AND GUARDS, VACUUM BREAKER, LOCKABLE CONTROL CABINET WITH DOOR SAFETY INTERLOCK, ASME CSD-1 CERTIFICATION, CONTROL CIRCUIT STEP-DOWN TRANSFORMER, SCR CONTROLLER, AND 12"x16" ACCESS MANWAY. PROVIDE START-UP SERVICE AND OWNER OPERATING AND MAINTENANCE TRAINING AS SPECIFIED.

2. PROVIDE FACTORY PIPED COMPONENTS INCLUDING BUT NOT LIMITED TO: ASME SAFETY PRESSURE RELIEF VALVE, QUICK BLOWDOWN VALVE, SLOW BLOWDOWN VALVE, FEEDWATER CONTROL VALVE, FEEDWATER STOP VALVE, FEEDWATER CHECK VALVE, AUTOMATIC SURFACE BLOWOFF PACKAGE (MANUAL STOP VALVE, INTERNAL COLLECTOR PIPE, METERING VALVE, CONDUCTIVITY CONTROL SYSTEM -SHIPPED LOOSE).

3. PROVIDE THE FOLLOWING TRIM AND CONTROLS:
   - DIGITAL CONTROL MANAGEMENT SYSTEM WITH TOUCHSCREEN CONTROLLER AT BOILER
   - REMOTE CONTROL THRU COMMUNICATION BUS WITH EXISTING BACnet I/P EMCS
   - ADDITIONAL CONTROLS INTERFACE WITH "MAIN SECURITY OFFICE" FOR CONTINUOUS MONITORING OF THE FOLLOWING ALARM CONDITIONS: (1) LOW WATER, (2) HIGH PRESSURE, (3) LOSS OF BOILER IN USE
   - ADDITIONAL CONTROLS INTERFACE WITH EXISTING ENERGY MONITORING SYSTEM ("IGNITION") TO RECORD AND TREND THE FOLLOWING BOILER PERFORMANCE: STEAM OUTPUT (LBS/HR), ELECTRICAL CONSUMPTION (kWH), FEEDWATER USAGE (GPM), AND ALL ALARM CONDITIONS. "MAIN SECURITY OFFICE" IS LOCATED APPROXIMATELY 250-FEET NORTH OF BOILER
   - STANARD PILOT LIGHTS, TOGGLE SWITCHES, AND ALARMS (WITH SILENCE)
   - WATER LEVEL CONTROLS WITH INTERFACE TO EXISTING DEAERATOR TANK FEEDWATER TRANSFER PUMP(S) AND BOILER FEEDWATER CONTROL VALVE
   - PRIMARY LOW WATER CUTOFF FLOAT AND POWER DISCONNECT
   - AUXILIARY LOW WATER CUTOFF INTERNAL PROBE
   - LEAD LAG SYSTEM (INTERLOCK EXISTING GAS BOILER CONTROLS TO STAGE OPERATION WITH ELECTRIC BOILER, EQUALIZE RUN TIME (ADJUSTABLE). ENSURE LEAD LAG CONTROLLER IS COMPATIBLE WITH EXISTING GAS BOILER AND FUTURE ELECTRIC BOILER OPERATION)
   - HIGH PRESSURE CUTOFF
   - OPERATING PRESSURE CONTROL TO MAINTAIN 55 PSIG IN MAIN STEAM HEADER, WITH PROGRESSIVE STEP CONTROL

4. PROVIDE THE FOLLOWING UTILITY CONNECTIONS:
   - STEAM: 4.0", FLANGED 300 LB.
   - FEEDWATER: 0.75" NPT
   - BOTTOM BLOWDOWN: 1.0" NPT
   - LOW WATER CUTOFF BLOWDOWN: 1.0" NPT
   - SURFACE BLOW OFF: 0.5" NPT
   - SAFETY PRESSURE RELIEF VALVE: 2.0" NPT

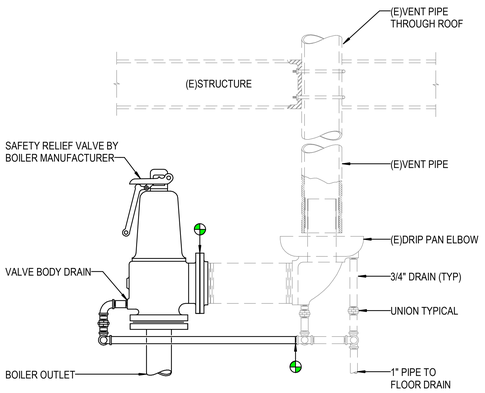

1 STEAM DRIP PAN ELBOW
NOT TO SCALE

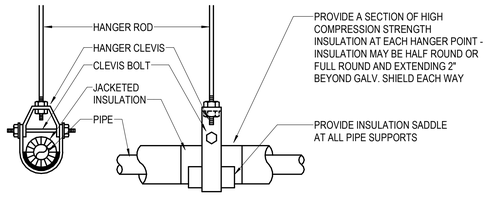

NOTES:
1. INSULATION TO BE CONTINUOUS THROUGH HANGERS. DO NOT BREAK INSULATION AT SUPPORTS, DO NOT INSULATE AROUND HANGERS.
2. INSULATION JACKET TO BE CONTINUOUS THROUGH PIPE SUPPORT COMPONENTS.
3. USE CLEVIS HANGERS FOR SINGLE PIPE RUNS, USE TRAPEZE HANGERS TO GROUP AS MUCH PIPING AS POSSIBLE PER HANGER.

2 PIPE SUPPORT - CLEVIS HANGER WITH SECTION VIEW
NOT TO SCALE

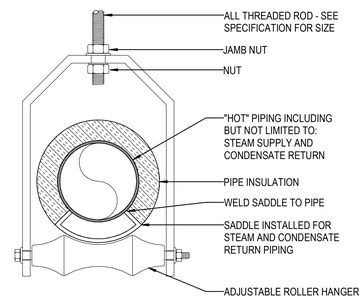

3 ROLLER PIPE HANGER DETAIL
NOT TO SCALE

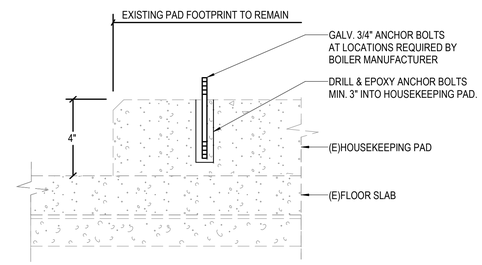

4 HOUSEKEEPING PAD ATTACHMENT DETAIL
NOT TO SCALE

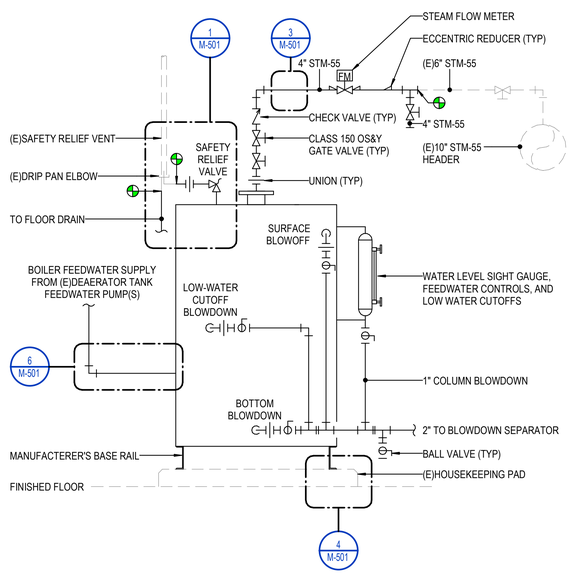

5 BOILER PIPING DIAGRAMS
NOT TO SCALE

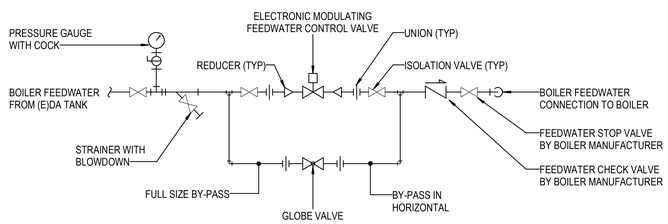

6 FEEDWATER PIPING DIAGRAM
NOT TO SCALE

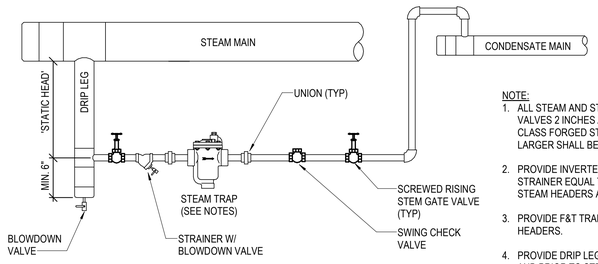

DRIP LEG SIZING			
STEAM MAIN DIAMETER (IN)	DRIP LEG DIAMETER (IN)	'STATIC HEAD' MIN. (IN)	
		SUPERVISED WARM-UP	AUTOMATIC WARM-UP
1/2	1/2	10	28
3/4	3/4	10	28
1	1	10	28
2	2	10	28
3	3	10	28
4	4	10	28
6	4	10	28
8	4	12	28
10	6	15	28

NOTE:
1. ALL STEAM AND STEAM CONDENSATE RETURN SERVICE VALVES 2 INCHES AND SMALLER SHALL BE 800 LBS CLASS FORGED STEEL. VALVES 2-1/2 INCHES AND LARGER SHALL BE 600 LBS.
2. PROVIDE INVERTED BUCKET TRAP WITH INTEGRAL STRAINER EQUAL TO 'SPIRAX-SARCO B-SERIES' ON STEAM HEADERS AT BOILERS.
3. PROVIDE F&T TRAPS ON ALL STEAM MAINS OTHER THAN HEADERS.
4. PROVIDE DRIP LEGS AT THE ENDS OF ALL STEAM MAINS AND PRIOR TO STEAM MAIN RISES.

7 STEAM DRIP LEG DETAIL
NOT TO SCALE

CROMWELL
1300 East 6th Street Little Rock, AR 72202
501.372.2900 cromwell.com

Project

L'Oreal USA Products
NLR - BOILER REPLACEMENT
11500 Maybelline Rd
North Little Rock, AR 72117

Design Phase
CONSTRUCTION DOCUMENTS

Revisions

No.	Date	Description

Stamp

CROMWELL ARCHITECTS ENGINEERS #5 ARKANSAS

STATE OF ARKANSAS REGISTERED PROFESSIONAL ENGINEER No. 9395 CHRISTOPHER S. BOBBITT
04-11-2025

Notes
1. CROMWELL ARCHITECTS ENGINEERS, INC. ALL RIGHTS RESERVED
2. THIS SHEET DESIGNED FOR COLOR PRINTING. CRITICAL INFORMATION MAY BE LOST WITH BLACK AND WHITE PRINTING.

Project Number 2025-024
Issue Date 04-11-2025
Sheet Title MECHANICAL SCHEDULES & DETAILS
Sheet Number M-501